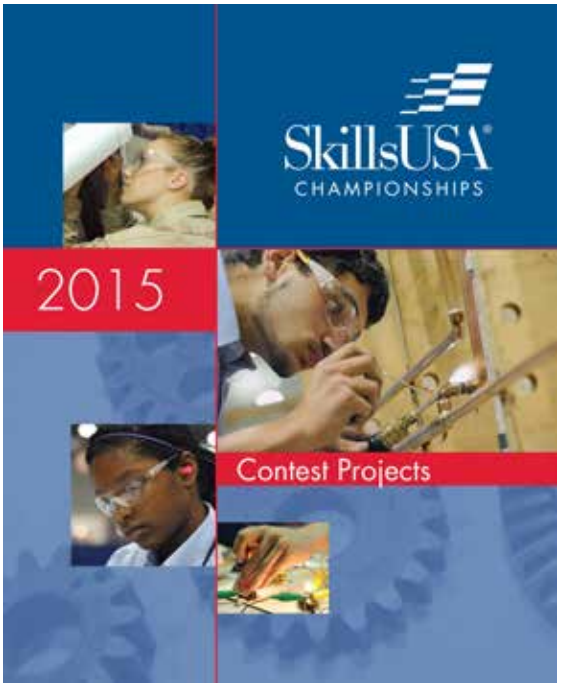

2015 Contest Projects

To print all of the contest projects at once, click the button below.

Warning: This document has 1,573 pages. Be sure you have enough paper to print the entire document.

SkillsUSA
2015 Contest Projects

3-D Visualization and Animation

For this practical exercise, you are to pick an object commonly found in a kitchen and bring it to life. The object you chose as your main "character" can be a food item, appliance, fixture, utensil, etc. Pick something that you can model, texture and animate in high quality. Better simple and high quality, than complex and low or even mediocre quality. The "character," "story" and animation should illicit an emotional response from the audience.

Create and submit a 20-30 second animation, rendering at 1024 by 768 pixel resolution in 16 bit color. In addition, you will need to create and submit three high quality still images at a resolution of 1280 by 1024 pixels in true color (24 or 32 bit color depth) to show the quality of your textures and lighting and two still images at 1280 x 1024 in true color (24 or 32 bit color depth) with wireframe visible to show your underlying models. The full contest scoring criteria is on the back side.

Here is some interesting background information regarding this practical exercise.

Back in the 1930's, the book *The Illusion of Life*, by the "old men of Disney," Frank Thomas and Ollie Johnston, laid out basic principles of animation. Much of their work in what was then a fledgling art form is still pertinent today, even in computer-based animation. Some of their basic principles are paraphrased below.

Squash and Stretch: These exaggerated deformations in the body of a character give the appearance of weight and volume as it moves.

Anticipation: These small "trigger" motions prepare the audience for the major action that a character is about to perform.

Follow Thru and Overlap: When the main body of a character stops, other parts continue to move. Nothing stops all at once. This enhances the realism.

Slow in-Slow out and Timing: Character movement isn't constant, but slower at the beginning, faster in the middle and slower again at the end of the action. Proper timing in animations maintains the appearance that motions follow the laws of physics.

Arcs: With few exceptions, objects should follow curved paths, not straight lines. This gives animations a more natural action and better flow.

Secondary action: A supplemental action in a scene reinforces the primary action for the audience and give the scene greater depth.

Exaggeration: Stay true to reality, but present it in a more wild or extreme form.

Staging: The presentation of an idea or "story" so that it is clear to the audience.

Appeal: Motions do not distract from the story, but are pleasing to viewer's eye.

Thank you and good luck!

Items Evaluated	**Possible Points**
Planning & Teamwork	100
Design and Modeling	250
Textures and Lighting	250
Animation Quality and Rendering	250
Written Test	150
Résumé Penalty	0 or -10 only
Clothing Penalty	Up to -50
Total Possible Points	1,000

SkillsUSA
2015 Contest Projects

Advertising Design

Click the “Print this Section” button above to automatically print the specifications for this contest. Make sure your printer is turned on before pressing the button.

AD

ADVERTISING DESIGN

SKILLSUSA CHAMPIONSHIPS

JUNE 25, 2015

CREATIVE SKILLS

SkillsUSA®

Competition Area: Creative Skills

Time: 5 hours

Subject: Logo Design and Menu Design

Client: The Menagerie Restaurant at the Louisville Zoo

Possible Points 600 (see attached judging sheet for point breakdown)

Background: You are an advertising designer and your client is The Menagerie Restaurant at the Louisville Zoo. You will be designing their logo and menu. This is a NEW, fun, family-friendly restaurant that showcases the best that the zoo has to offer.

Here is the definition of Menagerie: *A menagerie is a collection of captive animals, frequently exotic, kept for display; or the place where such a collection is kept, a precursor to the modern zoological garden. The term was first used in seventeenth century France in reference to the management of household or domestic stock.*

Assignment: Your job will be as follows: Conceive, design, and execute a logo for The Menagerie Restaurant at the Louisville Zoo. The required text for the logo is "The Menagerie Restaurant" with a subhead of "at the Louisville Zoo." The logo design may be in full color and must not be a strictly typographic solution (it must incorporate some form of a graphic or illustration). Your logo design for this part can be any shape or size, but for the purposes of this competition, your thumbnails should fit in at least a 3" square. Your logo thumbnails should be NO LARGER than 4". Please remember, this DOES NOT mean that your logo should be square. If you choose to do a rectangular or oval-shaped logo, you should adjust the size of your logo thumbnails accordingly. Above all, PACE YOURSELF. Do not spend too much time on your thumbnails. The logo should represent the idea of a zoo-themed, family-friendly restaurant. It should be presented in a professional, interesting and energetic way. We are asking you to be as creative as possible in the time allotted. This is the creative portion of the competition. BE CREATIVE. Show us your absolute best ideas.

Second, you will create a full color Menu. The Menu will list all of the items given to you in the text file. Include these things in your design:

- Must include an eye catching, attention grabbing design
- Must include menu copy, formatted consistently and professionally. It must be easy to read and navigate, and must display a clear visual hierarchy.
- Must incorporate the logo
- Must include visuals
- Anything that makes your design REAL or BELIEVABLE. (web address, phone number etc.)

Keep an eye on the time. **PACE YOURSELF!** The key to all of this is to finish in the time allotted.

Color: Full-color

Size: See instructions above for logo guidelines. Menu size is 11" x 17", single-sided. YOU MUST have a .25" white margin

Required copy: See instructions above

Procedure:

1. **Read directions**, look over all materials & evaluation sheet.
2. Sketch 10 thumbnails **EACH** of the logo and menu **in proportion** and in color. Logo FIRST. Menu SECOND.
3. Develop your designs for the logo and menu in proportion and in color from your thumbnails on the computer.
4. Create a PDF of the final version of your logo BY ITSELF. It should fit within a 5" x 5" box, (but it doesn't have to be square.) Save it as your contestant number + the word "logo" If created in Photoshop, keep the resolution 250 dpi. Type set your Contestant Number in the upper right corner of the logo in 10 pt. Helvetica or equivalent. Save as a PDF
5. Create 1 full-size, final of the menu on the computer which has your logo incorporated into it.
6. Proof on the screen! Create a PDF
7. Copy to jump drive, place all your elements back in the envelope and raise your hand to turn in your work.

Provided: Evaluation Sheet, Reference artwork & copy

Contestant Number:_____

Creative Skills
Judging Sheet

JUDGING

	Max per Section	Points Earned
Thumbnails:	**20**	
The following areas will be evaluated: Correct number of Thumbnails Strength and variety of ideas Use of color and indication of typography Communicative Strength of thumbnails		
Final Piece	**60**	
The following areas will be evaluated: Designs Developed from Thumbnails Strength of Idea, Communicative Strength Strength of Color Model (Design and Type) Creative Use of Illustrations/Photos		
Overall Creativity	20	
The following areas will be evaluated: Design solution appropriate to client Design Excellence		
TOTAL	**100**	

(x 6 for final score)

TOTAL

Computer Mechanical

Advertising Design

SKILLSUSA CHAMPIONSHIPS

JUNE 25, 2015

Competition Area:	Computer Generated Mechanical
Time:	2 hours
Subject:	Ad
Client:	Tap in NOW
Assignment:	Assemble the ad shown using the elements provided
Size:	7.5" x 9.75"
Colors:	Full color
Assessed Points	100 x 3 (see attached judging sheet for point breakdown)
Procedure:	CAREFULLY view the Ad and all the elements provided to re-create the Ad. NOTE: Some text is provided, some you will have to type in yourself. With your Desktop Layout program and using the Ad provided as a guide, SAVE the ad as your Contestant Number. Type set your Contestant Number in the upper right corner of the ad in white 20 pt. Helvetica. Type in ALL of the text. Use your spell check utility to make sure your text is accurate. Using your RULER, transfer the measurements from your sample ad to your computer generated mechanical for placement of elements such as rule lines, border, type and image placement. You will import the images from the "SKILLS CONTEST" folder on your hard drive. Assign colors as indicated. Pay close attention to the instructions, DO NOT PANIC...you can do this in the time allotted. PACE YOURSELF using your evaluation sheet as a guide...be aware of how the points are assigned. SAVE OFTEN!
Materials Provided:	Copy of finished Ad for reference, actual size Images Judging sheet

INSTRUCTION SHEET
DO NOT MEASURE THIS. Measure actual size ad.

The Ad size is 7.5" x 9.75"

Place this image.
Crop and scale as indicated.

Place this logo.
Size and position as shown.

This is a 2 pt. rule line
that surrounds the ad.
PMS 300

This Headline is Helvetica Bold.
46 pt. type on 36 pt. leading.
Baseline shift is 5

This Subhead is Helvetica Bold.
18 pt. type on 18 pt. leading.
Size and position as shown.

Body copy is 10 pt. Helvetica on 12 pt.
leading, tracking is -25. Note: Initial numbers
are BOLD and UNDERLINED. Position, and
kern as shown.

Place this box. Size and position
as shown. Color is PMS 300 C.
Opacity is set at 80%

Place this image.
Crop and scale as indicated.

5 Reasons to Drop the Bottle

Why Bottled Water is Bad for You and the Planet

There was a time when it was cool to have bottled water. But, like all passing fads, we've realized that there is a better way.

According to the Earth Policy Institute, in 1976, Americans drank an average of 1.6 gallons of bottled water per year. That number has risen to 30 gallons per year today. This massive increase of portable water comes with a hefty price tag – both economically and environmentally.

There are a lot of issues with bottled water – the environment, your wallet, the waste...let's take a look at 5 of them:

1 Bottled water is about 10,000 times more expensive than tap water.

2 The production of bottled water containers requires millions of barrels of oil per year. The transportation of those bottles releases thousands of tonnes of CO_2 into the atmosphere. American purchase 29 billion bottles of water every year, which requires 17 million barrels of oil to produce them.

3 According to a 2010 report of the World Wide Fund for Nature, roughly 1.5 million tons of plastic are expended in the bottling of 89 billion liters of water each year.

4 Bottled water isn't always as safe as tap water. The NRDC conducted a four-year study of the bottled water industry and that roughly 22 percent of the water tested contained contaminant levels that exceeded strict state health limits.

5 Think recycling is the solution? Think again. According to the NRDC, the recycling rate for those 29 billion bottles of water mentioned early is very low; only about 13 percent end up in the recycling bin. In 2014, roughly 2.5 million tons of water bottles ended up in U.S. landfills. Plastic bottles take centuries to decompose and if they are incinerated, toxic byproducts, such as chlorine gas and ash containing heavy metals, are released into the atmosphere.

So there you have it – 5 of the countless reasons why bottled water is ridiculous, nonsensical, and one of the greatest marketing ploys ever to be conceived. Drink the water from your tap: it's cheap, it's safe, and there's much less of an impact on our environment.

A message from Tap in Now
Phone: 202.383.2500 | Fax: 202.383.2505
www.tapinnow.org

Place this image. Size and position
as shown.

These words are Times New Roman
8 pt. type on 9.6 pt. leading.
Kern as shown.

This URL is Helvetica 8 pt. type.
Position, and kern as shown.

5 Reasons to Drop the Bottle

Why Bottled Water is Bad for You and the Planet

There was a time when it was cool to have bottled water. But, like all passing fads, we've realized that there is a better way.

According to the Earth Policy Institute, in 1976, Americans drank an average of 1.6 gallons of bottled water per year. That number has risen to 30 gallons per year today. This massive increase of portable water comes with a hefty price tag – both economically and environmentally.

There are a lot of issues with bottled water – the environment, your wallet, the waste...let's take a look at 5 of them:

1 Bottled water is about 10,000 times more expensive than tap water.

2 The production of bottled water containers requires millions of barrels of oil per year. The transportation of those bottles releases thousands of tonnes of CO2 into the atmosphere. American purchase 29 billion bottles of water every year, which requires 17 million barrels of oil to produce them.

3 According to a 2010 report of the World Wide Fund for Nature, roughly 1.5 million tons of plastic are expended in the bottling of 89 billion liters of water each year.

4 Bottled water isn't always as safe as tap water. The NRDC conducted a four-year study of the bottled water industry and that roughly 22 percent of the water tested contained contaminant levels that exceeded strict state health limits.

5 Think recycling is the solution? Think again. According to the NRDC, the recycling rate for those 29 billion bottles of water mentioned early is very low; only about 13 percent end up in the recycling bin. In 2014, roughly 2.5 million tons of water bottles ended up in U.S. landfills. Plastic bottles take centuries to decompose and if they are incinerated, toxic byproducts, such as chlorine gas and ash containing heavy metals, are released into the atmosphere.

So there you have it – 5 of the countless reasons why bottled water is ridiculous, nonsensical, and one of the greatest marketing ploys ever to be conceived. Drink the water from your tap: it's cheap, it's safe, and there's much less of an impact on our environment.

A message from Tap in Now
Phone: 202.383.2500 | Fax: 202.383.2505
www.tapinnow.org

Contestant Number:_____

MECHANICAL
Judging Sheet

JUDGING

	Max per Section	Points Earned
Size:	**20**	
The following areas will be evaluated: Advertisement Sized Correctly Margins correct		
Typography	**40**	
The following areas will be evaluated: Headline Body Copy Contact Information Spelling		
Elements	40	
The following areas will be evaluated: Artwork sized correctly Graphic elements sized correctly		
TOTAL	**100**	

(x 3 for final score)

TOTAL

Contestant Number:_____

Creative Skills

Judge's Comments

SkillsUSA
2015 Contest Projects

Architectural Drafting

Click the “Print this Section” button above to automatically print the specifications for this contest. Make sure your printer is turned on before pressing the button.

SkillsUSA. CHAMPIONS AT WORK

Architectural Drafting

June 25, 2015

Handout #1

You have just graduated from Meramec Community College with an Associate's Degree in Architectural Technology. You have decided to take some time off from school to get a job to save some money for tuition before proceeding to get a degree in Architecture.

You have applied to several firms but are really hoping to get a position as a drafter at the well-known firm, SkillsUSA Design, Inc. Today you are filling out an application to work at this firm.

Employment Application

You are to fill out the application for employment utilizing your best hand lettering. Please put your contestant number in the box at the top of the front page. DO NOT USE YOUR NAME ON THIS APPLICATION. Instead, please use the following fictional information to fill-out the appropriate blanks. If specific information for a blank on the application is not noted below, you may be creative in what information you provide as long as you are not using true, personal information.

Name and address: Timothy G. Pierce, 937 Phillips Lane, Louisville, KY 40209

Phone: 888-555-3271

Email: TGPierce93@gmail.com

Social Security Number: 411-39-6753

High School and address: Blue Valley Northwest High School, 13260 Switzer, Overland Park, KS 66213

College: Meramec Junior College, 11606 Big Bend, Kirkwood, MO 63122

Previous Employer: Chuck E Cheese, 7200 Manchester, Des Peres, Missouri 63131

Military Service: Put "N/A" in the Branch blank and leave all other blanks empty

Sign and date the application using the name noted above and today's date.

When you have completed the application, put it to the side of your work station and raise your hand to get the rest of the contest information.

You will be judged on the quality of your hand lettering as well as your ability to follow directions. In addition to the directions written here, we may provide further verbal directions at any time.

SkillsUSA.

SkillsUSA Design, Inc.

Contestant Number

Employment Application

Applicant Information

Full Name: _____ Date: _____
Last *First* *M.I.*

Address: _____
Street Address *Apartment/Unit #*

_____
City *State* *ZIP Code*

Phone: _____ Email _____

Date Available: _____ Social Security No.: _____ Desired Salary: $ _____

Position Applied for: _____

Are you a citizen of the United States? YES ☐ NO ☐ If no, are you authorized to work in the U.S.? YES ☐ NO ☐

Have you ever worked for this company? YES ☐ NO ☐ If yes, when? _____

Have you ever been convicted of a felony? YES ☐ NO ☐

If yes, explain: _____

Education

High School: _____ Address: _____

From: _____ To: _____ Did you graduate? YES ☐ NO ☐ Diploma:: _____

College: _____ Address: _____

From: _____ To: _____ Did you graduate? YES ☐ NO ☐ Degree: _____

References

Please list two professional references.

Full Name: _____ Relationship: _____

Company: _____ Phone: _____

Address: _____

_____

Full Name: _____ Relationship: _____

Company: _____ Phone: _____

Address: _____

Previous Employment

Company: _____ Phone: _____

Address: _____ Supervisor: _____

Job Title: _____ Starting Salary: $ _____ Ending Salary: $ _____

Responsibilities: _____

From: _____ To: _____ Reason for Leaving: _____

May we contact your previous supervisor for a reference? YES ☐ NO ☐

Company: _____ Phone: _____

Address: _____ Supervisor: _____

Job Title: _____ Starting Salary: $ _____ Ending Salary: $ _____

Responsibilities: _____

From: _____ To: _____ Reason for Leaving: _____

May we contact your previous supervisor for a reference? YES ☐ NO ☐

Military Service

Branch: _____ From: _____ To: _____

Rank at Discharge: _____ Type of Discharge: _____

If other than honorable, explain: _____

Disclaimer and Signature

I certify that my answers are true and complete to the best of my knowledge.

If this application leads to employment, I understand that false or misleading information in my application or interview may result in my release.

Signature: _____ Date: _____

SkillsUSA. CHAMPIONS AT WORK

Architectural Drafting

June 25, 2015

Handout #2

Congratulations! You received a call last week from Gary Neese at SkillsUSA Design. You are now at his office for the first interview. As he told you on the phone, this interview will be an interactive interview where he will give you a series of tasks to do in order to verify your skills level.

Mr. Neese has given you this packet of information to use during your interview. All drawings required for the interview are fully described in this packet. The specifications needed to complete the drawings are also included herein.

As you try to calm your nerves for this interview, you recall the words of your drafting instructor, Mr. Lee, "No matter what, always read and follow the directions thoroughly."

Your task today is to provide the following drawings plotted onto one sheet of paper:

-Dimensioned Floor Plan based upon the criteria contained in this packet

-Three Exterior Elevations

-Building Section

-Openings Schedule

General Information

-Use good CAD production techniques.

-You are allowed only one plotted sheet to be turned in at the end of the day.

-Dimensioning and all text should vary in size due to importance but must be legible and appropriately sized using standard architectural conventions.

-Include a title and scale for each drawing on all sheets. Include a North arrow where appropriate.

-Lineweights should vary to create an easily-read sheet of information.

-The scale of all required drawings will vary. Utilize wise sheet layout. All required drawings and additional information will fit on one plotted sheet of the size required.

-You will plot your computer-generated drawing on a 24" x 36" sheet. Construct a border of a plotted size of 22" x 34". Place a 1" x 1" square (plotted size) in the bottom, right-hand corner of your sheet. Place your contestant number in this square. Do not include any other type of titleblock or additional

information on your plotted sheet other than as described here.

-Drawings will be printed with black ink for best reproduction.

-Follow all verbal directions given and all written directions in this packet.

-Note that providing additional information not requested in this document could result in lowering your score.

-Do not include your name anywhere on any of the drawings to be judged. If your name appears on any plotted sheet you will be disqualified from the contest.

Construction Materials and Notes

-The house is single story with a hip roof with a 4:12 slope. The overhangs are 18" deep.

-The roof shall have 3/4" plywood sheathing with asphalt shingles.

-The site slopes from the front of the house to the back. The grade at the front of the house is 6" below the finished floor. Note the grade on your elevations appropriately.

-The garage floor is concrete slab-on-grade but the rest of the house has a basement. The basement walls are 8" thick, cast-in-place concrete with a 24" x 12" concrete tee footing. Assume the frost line is 36" below grade.

-All concrete floor slabs are 4" thick, reinforced, concrete on 4" of crushed rock with a vapor barrier. The basement walls are 9'-0" from the top of the slab to the top of the foundation wall.

-The floor joists are 2 x 12's and the rafters are 2 x 10's. The joists and rafters are at 12" o.c.

-Exterior walls are 2 x 4 wood studs at 16" o.c. with batt insulation and treated sill plates with 1/2" x 10" anchor bolts at 48" o.c.

-Exterior walls to be sheathed with 1/2" plywood on the exterior and 1/2" gypsum board on the interior.

-The top of plate height is 9'-1 1/2".

-Interior walls will be 2 x 4's at 16" o.c. with 1/2" gypsum board each side.

-All rooms have vaulted ceilings except the bathrooms. The ceilings in the bathrooms are 8'-0" above the finished floor.

Drawing Requirements

Floor Plan

1. Per the attached sketch.
2. Plot the floor plan at a scale of 1/4" = 1'-0".
3. Show all pertinent information including, but not limited to, casework, appliances and plumbing fixtures. Do not show furniture or electrical information.
4. Provide necessary interior and exterior dimensions for construction.
5. Dimension all exterior windows and doors to their centerlines.

    a. Windows are casement windows. A few windows are shown on the attached floor plans. You may add windows where you believe they are needed. All windows shall be included in the window schedule.

b. Sills of all bedroom windows shall be at a maximum of 40" above the finished floor.

c. All exterior doors are to be 36" wide. All other doors are to be 30 inches wide, unless noted otherwise on the plan.

6. Indicate door and window sizes for each door and window in an opening schedule(s). Make sure each door and window is scheduled with a unique door number and window letter.

a. The openings schedule is to be plotted on the same drawing sheet as the floor plans.

Exterior Elevations

1. Draw three elevations. The south elevation should be drawn at a scale of 1/4" = 1'-0". Draw the west and north elevations at a scale of 1/8" = 1'-0".

2. The elevations must be plotted on the same sheet as the other required CAD drawings.

3. Provide proper annotation and dimensioning for exterior elevations.

4. Use hatch patterns to indicate materials, but rely on the notes to fully explain the materials and/or methods of construction.

Building Section

1. Cut a section through the home where indicated on the attached sketch with the letter "X".

2. Plot the section at a scale of 1/8" = 1'-0".

3. Provide all appropriate dimensions and notes as required for a building section.

4. Indicate any doors, windows, or construction that may be visible beyond the cutting plane. Use good judgment as well as good drafting techniques with the building section in order to convey clear and understandable information.

5. Use appropriate lineweights for a building section. Include shading or hatching as appropriate.

Reminder:

You are to plot from a pdf file. Create your pdf using your contestant number for identification, i.e. **123.pdf**

The 1" square box with your contestant number inside is to be the only identifying factor on any of your sheets.

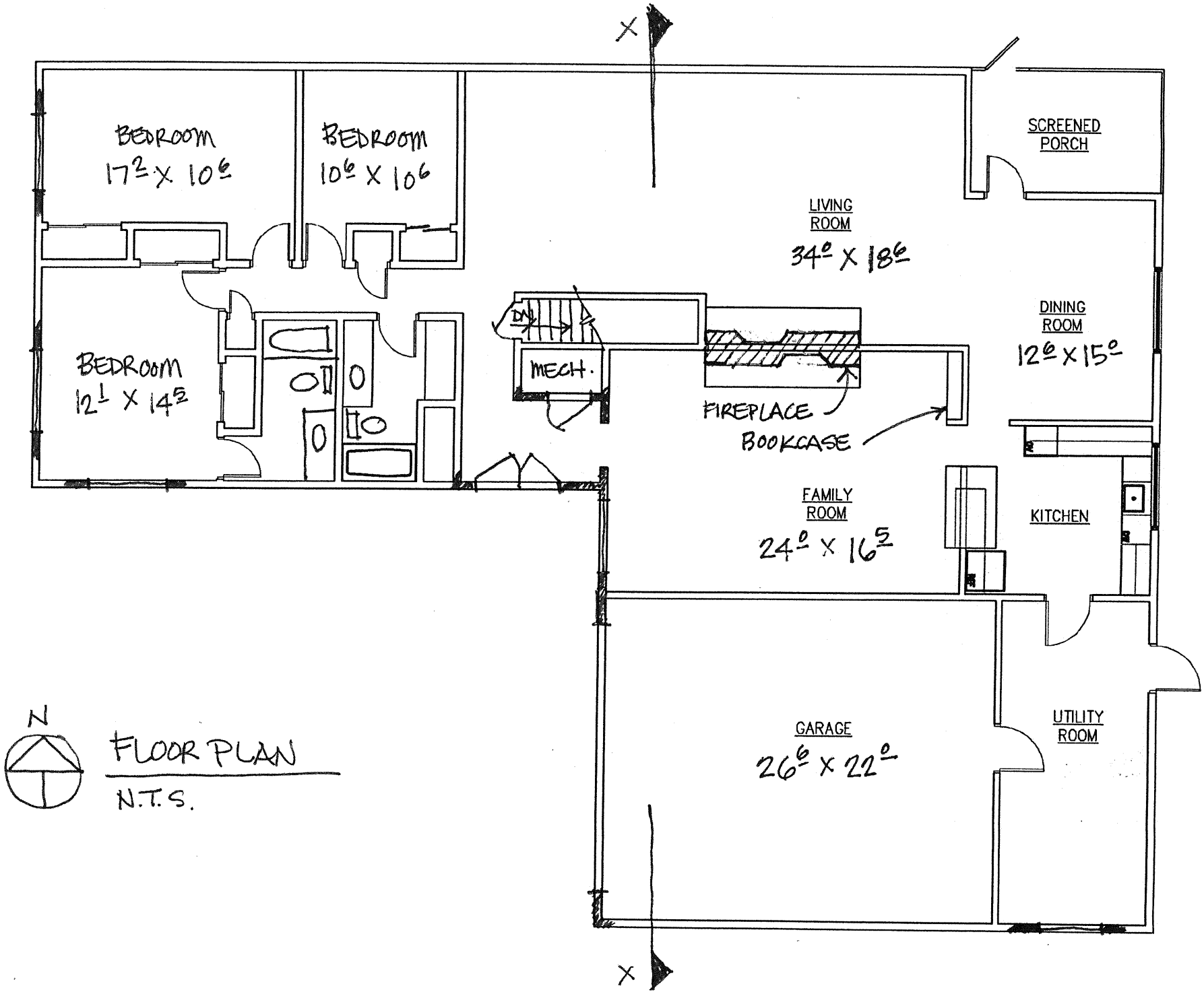

FLOOR PLAN

N.T.S.

SkillsUSA. CHAMPIONS AT WORK

Handout #3
ADDENDUM

Mr. Neese has asked you to include a few things with your interview drawings. As part of the interview process, this will indicate to him how you react to last-minute changes.

You are to hand-draft a basement/foundation plan with a storm shelter. The drawing shall be drawn to an approximate scale of 1/4" = 1'-0" on the sheet of paper provided to you. You may use any tools you have to draft the basement/foundation plan. The judges will not scale the drawings, but will be looking for reasonable overall accuracy, delineations of line weights and completeness of information included.

Include all notes, dimensions, etc. to produce a complete drawing. This drawing is due at 4:00 and should be turned in along with your computer-plotted sheet.

The basement shall be plumbed for a future bathroom, but is otherwise unfinished. The grade of the lot allows the basement to be a walk-out. Include one pair of 36" wide French doors and appropriate windows allowed by the change in grade. The bottom of the stairs shall have a 30" wide door.

In addition to the information provided in the packet your received previously, additional information regarding the storm shelter is as follows:

-The storm shelter will be designed and built to comply with the minimum design requirements for tornadoes as identified in the document FEMA 361 "Design and Construction Guidance for Safe Rooms".

-The storm shelter walls are to be 8" thick concrete walls doweled into the floor slab of the basement. All storm shelter walls require thickened slabs per detail 2/AG-02. The storm shelter shall have clear interior dimensions of 8'-0" x 8'-0".

-The lid of the storm shelter shall be per detail 3/AG-09. The minimum clear height of the storm shelter shall be 6'-8" above the basement floor slab.

-The door to the safe room is to be a 36" wide door with 14 gauge steel sheathing. Include this door in the door schedule.

In addition to the basement/foundation plan drawing, Mr. Neese would like you to include two dormers on the roof at the living room.

Draw a 1" x 1" box in the bottom right-hand corner of your sheet and put your contestant number in that box. This is the only identifying marking to be included on your sheet.

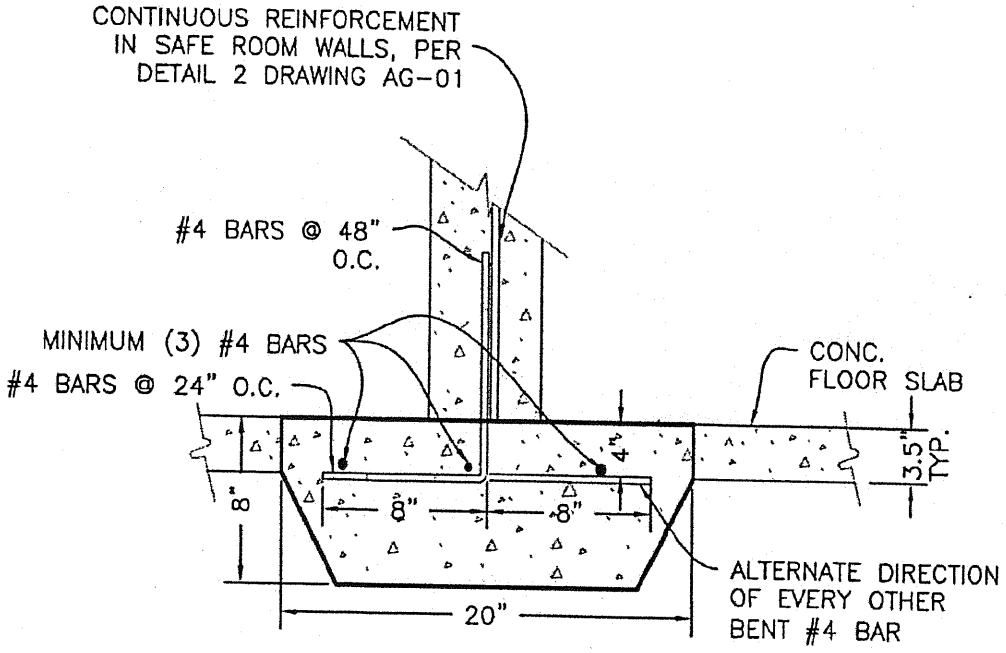

2 TYPICAL ANCHOR DETAIL FOR CONCRETE WALL ON SLAB-ON-GRADE FOUNDATION
AG-02 SCALE: N.T.S.

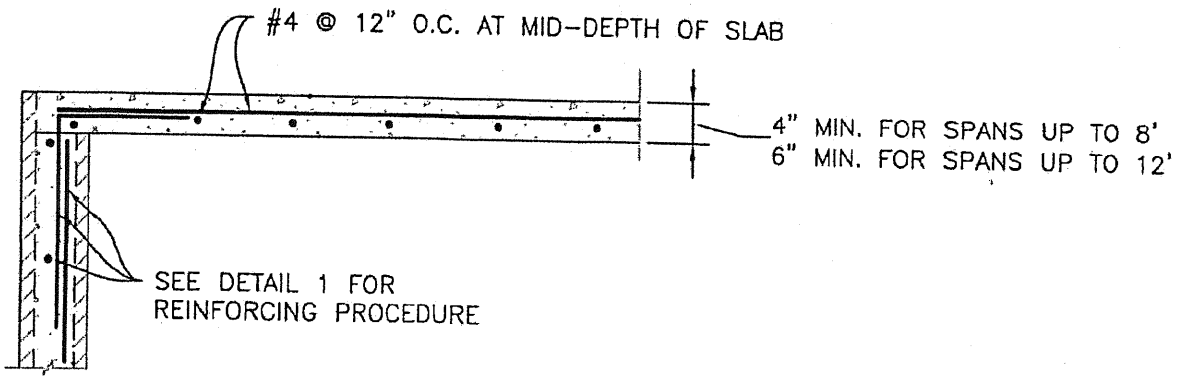

3 ALTERNATIVE ROOF DETAIL
AG-09 SCALE: 1/2"=1'-0"
0 6" 1' 2'

SkillsUSA
2015 Contest Projects

Audio/Radio Production

Click the “Print this Section” button above to automatically print the specifications for this contest. Make sure your printer is turned on before pressing the button.

National Audio/Radio Production Prompt 2015

Objective 1:

Create a 2 minute “Charles Osgood” type news expose on the World Cup Soccer Tournament. This must include at least 1 interview with a person outside of SkillsUSA (preferably a soccer fan). Please include the name and info for your interview to check facts if you need to later. This news story will be split into 2 parts 60 sec. Each.

Objective 2:

Create a 1 minute “streaming radio” type infomercial on a company from Techspo. This must include at least 1 testimonial from someone at the trade show booth. Please include the name and info for your interview to check facts if you need to later. This will be placed at the end of your news story.

Objective 3:

Create a 30 sec. Radio commercial spot for one of the famous Kansas City BBQ restaurants. This will be placed in the middle of your news story.

Objective 4:

The parts should be edited together as a radio program:

1 Minute of the News Story
30 Sec. Spot
Second Minute of News Story
60 Sec. Spot

Skills:

Talent: Must write and edit the script, conduct interviews, show proper mic technique, have proper diction, and assist with the editing.

Engineer: Must show proper technique in obtaining proper level-to-recorder, mic choice, show proper level and balance in mix, and edit the project.

Requirements:

The project must be submitted by 2:00PM on Thursday June 26 on a USB Flash Drive labeled with the Team number in either “High Quality” MP3 or CD Quality Audio (16Bit-44.1K).

Judging:

The contestants will be judged on all of the criteria shown on the scorecard available at the SkillsUSA Competition Website. Any failure to follow the prompt in any part of the criteria will result in a 0 for that score. Any use of off-color humor or profanity will result in a 0 for all criteria and the team will be judged on it's test score alone. **NO COPYWRITTEN MATERIAL CAN BE USED IN THE PROCUCTION PER SKILLSUSA.** Any violation of this will result in a 0 for the project.

SkillsUSA
2015 Contest Projects

Automated Manufacturing Technology

Click the “Print this Section” button above to automatically print the specifications for this contest. Make sure your printer is turned on before pressing the button.

Skills ECO 2015

Using the geometry from the insert, make a cover. Allow .005 clearance for bosses and pockets per line (.010 for overall dimension). The cover will consist of 6 locator pins, and will sit on the out flange area of the insert.

2015 SKILLS USA CHAMPIONSHIP

AUTOMATED MANUFACTURING TECHNOLOGY COMPETITION

TEAM GUIDE

Contents

Acknowledgments 1
AMT Competition Technical Committee 2
Judges 3
National Educational Technical Committee 4
Awards 4
1: Contest Overview 5
1.1: Statement of the Problem 6
1.2: Instructions 6
1.3: Guidelines 7
1.4: QA and Design Restrictions 7
1.5: Team Guidelines 8
2: Official Competition 9
2.1: Purpose 9
2.2: Clothing Requirement 9
2.3: Eligibility 9
2.4: Scope of Contest 10
2.5: Group Organizational Goal 12
2.6: General Information 12
2.7: Goals 12
2.8: Notebook 12
2.9: Required Materials 13
2.10: Division of Duties 14
2.11: Suggested Organizational Flow 15
3: Safety 16
4: Additional Forms 17
Notebook Judging Form 19
Process Plan 21
Fixturing Description 23
Quality Assurance 25
Concurrent Engineering Process Plan 27
Math Problem 29

Acknowledgments

The success of the competition is the result of the motivated contestants and their instructors, the determined efforts of the National and State Technical Committees, and the generosity of companies donating equipment. The following companies have contributed resources and support.

Intelitek, Inc.
AutoDesk, Inc.
Calculated Industries
CNC Software, Inc.
River Valley Technical Center
MSC
3Dconnexion Inc.
Rolla Technical Institute
SolidWorks
Learning Labs
LS Starrett
CG Tech
Verisurf

AMT Competition Technical Committee

The following individuals contributed their time and energy to the Technical Committee.

Richard McManus
Aztech Educational Resources
17611 North Foothills Dr
Sun City, AZ 85373

Rick Knisely
Aztech Educational Resources
17611 North Foothills Dr
Sun City, AZ 85373

Jeff Stone
Intelitek
444 East Industrial Park Drive
Manchester, NH 03109-5317

Alex Taliadouros
Intelitek
444 East Industrial Park Drive
Manchester, NH 03109-5317

Dan Newby
CNC Software
2909 71 Avenue N.W.
Gig Harbor, WA 98335

Robert Clarke
Intelitek
444 East Industrial Park Drive
Manchester, NH 03109-5317

Richard Walker
National Tooling & Machining Assoc.
9300 Livingston Road
Ft. Washington, MD 20744

Dustin Spieth
CNC Software
2909 71 Avenue N.W.
Gig Harbor, WA 98335

Judges

The following individuals contributed their time and energy as Judges for the competition.

Rick Knisely
Aztech Educational Resources
17611 North Foothills Dr
Sun City, AZ 85373

Dan Newby
CNC Software
2909 71 Avenue N.W.
Gig Harbor, WA 98335

Ray Ellege
Verisurf
4907 E. Landon Dr
Anaheim, CA 92807

Mike McDonald
CG Tech
9000 Research Drive
Irvine CA 92618

Sheldon Richardson
Learning Labs
366 Switch Road SW
Calhoun GA 30701

Steve Bardonner
Ivy Technical Community College
444 Kelly Street
Columbus, IN 47203

Ben Richardson
Learning Labs
366 Switch Road SW
Calhoun GA 30701

Dustin Spieth
CNC Software
2909 71 Avenue N.W.
Gig Harbor, WA 98335

National Educational Technical Committee

The following individuals contributed their time and energy to the National Educational Technical Committee.

Don Block, Chairperson
Rolla Technical Institute
1304 East 10th Street
Rolla, MO 65401

Jeffrey Fisher
South Central Technical College
Route 4, Box 34
New Ulm, MN 56073

Samuel Dolson
Manteca High School
311 E. North Street
Manteca, CA 95336

George Skena
Old Dominion University
NASA Langley Research Center
NorthStar Research Institute

Rick Huddleston
Tulsa Technology Center
3638 South Memorial Drive
PO Box 477200
Tulsa, OK 74147-7200

Jon Morgan
South Central College
45669 Judson Bottom Road
Mankato, MN 56003

Awards

The following companies have supplied awards:

Intelitek, Inc

3Dconnexion Inc.

CNC Software Inc.

MSC

SolidWorks

1: Contest Overview

1.1: Time Schedule for Contest

On the first day of competition teams will have a half day (approximately 5 hours) to complete a Virtual Part as defined by "Organizational Flow" Steps 2.11.1 to 2.11.4. The top 5 teams for secondary, and the top 5 teams for post-secondary, as selected by the judges will return for the second day to complete Steps 2.11.5 to 2.11.7 working on the Benchmill 6000 CNC Machine to manufacture the final part.

1.2: Cutting-edge Technology

Current advances in manufacturing technologies such as CAD, CAM, and CNC, have allowed the United States to remain competitive within the global market. To compete in this evolving field, companies worldwide must remain at the forefront of both current and emerging technologies in design and manufacturing. With today's complex design and manufacturing challenges, no individual is equipped with all the answers, so it is imperative for manufacturers to combine the resources and abilities of a team to resolve problems.

1.3: Your Team

Success in Automated Manufacturing is often found using a team approach. In the interest of emulating industry, this competition will be structured in this manner. Proving of part design in a "Virtual CNC Machine" is an industry cost savings process. For optimum team efficiency, we suggest your team be comprised of a specialist in each of the following fields:

- Computer Aided Design (CAD)
- Computer Aided Manufacturing (CAM)
- Computer Numeric Control (CNC)

1.4: Cost Reduction

Rapid Prototyping and Concurrent Engineering are two of the most efficient methods used by industry to reduce the time and cost of bringing a new product from concept to market. Rapid Prototyping is simply the development of a prototype as quickly as possible. Concurrent Engineering is the pairing of the designer with the manufacturer to simultaneously work on the design of the product throughout the development of the product in its entirety.

1.1: Statement of the Problem

1.1.1: The Client's Needs

D&J Industries, Incorporated (hereafter referred to as The Client) is dissatisfied with its old supplier. They used manual machines causing the part signatures to have an unacceptable variance, their quotations were inaccurate, and their lead-time was unacceptable.

It is critically important that The Client locate a firm able to rapid prototype and meet engineering changes at any point of the prototyping process. The Client wishes to find the best shop to have the part(s) prototyped and manufactured.

As an Automated Manufacturing Technology team, known as Pro Design, Incorporated, your company will be competing for this lucrative contract against several other firms.

1.1.2: Your Assignment

Pro Design has been presented with a sample part drawing that the Client wishes to have mass produced. Your team will need to prototype the part(s), incorporate any changes that the client might make, then manufacture the final product.

Pro Design's Team Leader is responsible for communication between your company and D&J Industries, Incorporated.

1.2: Instructions

1.2.1: Rapid Prototype

The Client is a manufacturing plant that needs a new product designed and created. Currently, the only information they can supply is a rough concept and drawing. The prototype material (Ren board-440) will be provided by the client. Your team's job is to machine this prototype.

The Client requires that each stage of the CAD/CAM/CNC process be well documented, including a properly dimensioned CAD print for each of the components. All drawings should meet proper guidelines for engineering drawings.

After your prototype has been "virtually" cut and has passed your internal quality control, you will submit it to The Client's Quality Assurance Group. The Client has specified accuracy, finish, and the turn-around-time it takes to complete the process.

1.2.2: Concurrent Engineering

The Client will review the prototype and may require one or more changes. The Client requires quick updates to product design throughout the development process. Significant issues in this stage are The Client's specified dimensional accuracy, finish, and efficiency in part programming.

1.3: Guidelines

1.3.1: Requirements

The Client's Engineering Project Manager has provided an outline of materials to begin your planning and manufacturing process. Your success on this project is based upon the following criteria:

1. Provide complete documentation of your design.
2. Provide complete documentation of process plan, tooling and setup.
3. Provide Quality Assurance on all parts.
4. Use the technology in preparation of documentation, setups, design, and machining properly.
5. Package completed project with accompanying documentation in an orderly, professional presentation.
6. Use team work in project management effectively.
7. Take safety precautions in the manufacturing process.
8. Use time, materials, and resources effectively.

1.4: QA and Design Restrictions

1.4.1: Tolerances

:

1. Hole Locations = + OR - .005"
2. Hole Diameter = + OR - .003" on finished holes
3. Slot Dimension = + OR - .005"
4. Hole Depths = + OR - .010"
5. Slot and Shoulder Locations = + OR - .010"

1.5: Team Guidelines

1.5.1: Production Guidelines

Your team should follow these guidelines:

1. Primary responsibilities and duties are organized.
2. A team leader is identified to interact with Technical Committee representatives.
3. Your team decides upon appropriate break times with the exception of the mandatory lunch break.
4. Breaks are to be taken within assigned individual work areas.
5. Team members must notify a Technical Committee representative before taking a bathroom break. Only one team member is allowed to leave the contest area at a time.
6. You must create a separate file of your CAD drawing on your CAD computer and transfer it to your CAM computer via USB memory stick.

1.5.2: Equipment Malfunctions

IN THE CASE OF A MACHINE FAILURE: The team leader will communicate the problem to a representative of the Technical Committee. The representative will then notify the Project Manager.
If it is determined that it is in fact a machine problem, the running time clock may be stopped for that team. In the case of a stopped time clock, all work will stop for the entire team until the problem is resolved.

IN THE CASE OF SOFTWARE PROBLEMS: The choice of CAD and CAM software is the responsibility of the team. All software must be original copies. If your team develops a problem with your software, the Technical Committee will work in whatever way it can to resolve the problem but the clock will not be stopped.

2: Official Competition

2.1: History

This competition is officially sanctioned by SkillsUSA and has run continuously since 1994. This competition is unique due to its three-member team concept and the intensive use of hardware and software.

2.1: Purpose

2.1.1: Goals of the Competition

To evaluate each contestant's preparation for employment in automated manufacturing and the team approach to problem solving in the work environment. To recognize outstanding students for excellence and professionalism in the field of automated manufacturing technology.

2.2: Clothing Requirement

2.2.1: Correct Attire

- official khaki work shirt
- official khaki work pants
- black or brown leather work shoes
- safety glasses with side shields or goggles (prescription glasses must be covered with goggles unless they are equipped with side shields)

To purchase official work clothing, contact Midwest Trophy Manufacturing Co., Inc. by calling 1-800-324-5996 or order online at: http://www.mwtrophy.com/.

2.3: Eligibility

2.3.1: Qualifications

This competition is open to active SkillsUSA members enrolled in programs with precision machining, automated manufacturing, or CAD/CAM or CNC as their occupational objective.

2.4: Scope of Contest

2.4.1: Teams and Documentation

1. Teams MUST be composed of three members. Teams will demonstrate their ability to perform, utilize skills and knowledge necessary to complete the project as presented to them by the Technical Committee.

2. Your team is presented with a dimensioned drawing(s) of a part(s) to prototype. When you finish "Virtual" machining the prototype part(s) you will present it to The Client (judges). The top five (5 from secondary and 5 from post-secondary) teams will move on to the second day. At this time you will be presented with a new drawing(s); either a change order or an additional part(s) request. Proceed to machine final product.

3. Each team will be issued a notebook. This will include all of the necessary information and forms to complete the project. These forms will not be highly specific but will coach the teams. All forms and drawings must be turned in to the judges at the end of the competition.

2.4.2: Required Competencies

Successful competitors possess the following skills:

A. Mathematics and Measurement
   1. Measure to the nearest .001 inch
   2. Calculate CNC speed and feeds
   3. Calculate stock utilization and setup
   4. Calculate tolerances
   5. Estimate costs and material usage and write an evaluation

B. Designing, Sketching, Planning
   1. Translate information from drawing to CAD
   2. Create CAD file for manufacturing
   3. Manufacturing documentation
   4. Process plan
   5. Plot CAD file
   6. Export CAD file
   7. Process Engineering Change Orders (ECOs)

C. Create Toolpath (CAM file), CNC Code
   1. Create Process/Job Plan
   2. Read-in CAD export file
   3. Create toolpath
   4. Verify toolpath
   5. Create CNC code
   6. Send CNC code to machine tool
   7. Process ECO

D. Perform CNC Machining Functions
   1. Verify CNC file
   2. Verify toolpath
   3. Setup part blank on mill
   4. Set all offsets and tooling
   5. Adjust speeds and feeds as needed
   6. In-process Quality Assurance
   7. Perform tool changes
   8. Perform multiple machining operations in one setup
   9. Verify (TQM) process and part
   10. Process

E. Inspect Part TQM Process
   1. Verify part to standards
   2. Verify part to ECO standards
   3. Document process

F. Safety

1. Follow proper safety procedures in a general industrial workplace environment.
2. Follow proper safety procedures in running and programming a CNC Machine tool.

G. Quotation

1. Take a written evaluation that measures ability to solve various solutions to the process that is involved to quoting a job in a rapid prototyping environment.

2.5: Group Organizational Goal

2.5.1: Team Dynamics

The competition should run much like you would expect from industry; with group members interacting at will. The CAD operator will construct the part geometry, the CAM operator will generate the toolpaths, and the CNC operator will do the setup and machine the part.

The contest is designed to promote creativity in organization of production responsibility. Teams should divide duties among all team members. No one individual should dominate by taking responsibility for more than one project specialty. When a team member has spare time, they will help their teammates. All Team members are responsible for double-checking each other's work and quality control.

2.6: General Information

2.6.1: Necessities

The following items are required to compete in this contest:

1. Intelitek CNCMotion **Virtual Software** will be provided. (Virtual CNC Machine)
2. Intelitek's Benchmill 6000 series CNC milling machines and tooling will be provided.
3. Teams must provide two computers, one of which must accept an Ethernet connection.
4. Each team will have licensed versions of CAD/CAM software.
5. Each team will provide a 6" dial or digital Vernier caliper. Dial indicator (i.e. Starrett Last Word Dial Test Indicator, must have 3/8" holding shank), a calculator, a set of ¾ "and/or 1" parallels (or a complete set), 6" or 12" steel rule and a soft face hammer.
6. Teams must consist of 3 members.
7. The Prototype and the finished part will be machined in a prototype material.
8. Each team can provide 3/8 edge finder.
9. Each team can provide a set of parallels.
10. Each team can provide appropriate sized end mills.
11. Each team must provide a machinist handbook.
12. Each team must provide USB Memory Device (thumb drive) for file transfer.

splourde 9/11/2008 8:47 AM
Deleted: :

2.7: Goals

2.7.1: Team Objectives

1. To have every team complete the competition.
2. To have each team member demonstrate reading and writing skills.
3. To have each team member use their critical thinking and problem solving abilities in the contest.
4. To have each team member illustrate responsibility, teamwork, self-management skills, and professionalism.

2.8: Notebook

2.8.1: Supplied Documentation

Each team is issued this notebook and information packet. This will allow the team to display a plot or print of their operation. Required documentation is also included.

2.9: Required Materials

2.9.1: Workstation Components

Teams require the following materials to complete the competition. The Technical Committee provides many of these materials, but the teams must also bring certain items.

AMT Technical Committee provides:

- Intelitek's Benchmill 6000 CNC Machining Center with:
  - Machinist vise
  - Hold-downs and clamps
  - Tool holders
- Part(s) design.
- Competition notebook.
- Pencils.
- Prototype Material for machining.
- Information and furnishings for judges and technical committee.

2.9.2: Team Provided Components

Teams provide:

- Two computers:
  - One computer loaded with CAD software for CAD program.
  - One computer loaded with software for CAM program. This computer MUST have an open LAN Port (Ethernet connection) and Windows XP SP3 / Vista / 7 - 32 or 64bit.
- Licensed versions of the above CAD and CAM software must be available at start of the orientation for loading onto the technical committee's computer(s).
- One six inch dial or digital vernier caliper.
- One dial indicator (example: L.S. Starrett Last Word dial test indicator) Dial indicator MUST have 3/8" holding shank to fit into tool holder supplied by Technical Committee.
- One calculator.
- One pair of ¾" and/or 1" parallels (or a complete set).
- One soft-face hammer
- One 6" or 12" steel rule.
- Each team can provide 3/8 edge finder.
- Each team must provide a machinist handbook.
- Each team can provide appropriate size end mills.
- Each team must provide a USB memory device.

Note: ONLY the above listed items will be allowed in the contest area during the competition.

2.10: Division of Duties

2.10.1: Department Contributions

Process Documentation Notebook	*Possible Division of Duties*
CAD Department Stage 1, Rapid Prototype Original print CAD dimensioned views necessary to detail part completely Stage 2, Finish Part Production Change order CAD dimensioned print (views necessary to detail part completely) and pictorial view	**CAD Engineer** All CAD system import and export Creating part geometry Exporting necessary geometry to CAM system Dimensioning parts Plots Receive change order Communication of changes to team Update all CAD files All drawings should meet guidelines for engineering drawings
CAM Department Stage 1, Rapid Prototype Process documentation to include selection of tools, machining order, etc. Generate NC code Stage 2, Finish Part Production Develop new process plan Program new toolpath Generate NC code	**CAM Engineer** All CAM system input and output Importing CAD geometry Creating tool paths Process sequencing Tool selection Creating NC code
CNC Department Stage 1, Rapid Prototype Fixturing description Tool description Tool setup Fixture and set-up Stage 2, Finish Part Production Finish ECO part production	**CNC Engineer** All CNC setup and operation CNC control software input Fixturing stock, tool offsets
Quality Control Department Stage 1, Rapid Prototype Part inspection sheet, all team members sign-off All members check positions, tolerances, etc. Stage 2, Finish Part Production Part inspection sheet, all members sign All members double-check work, clean-up	**Quality Control** All Members

2.11: Suggested Organizational Flow

2.11: Suggested Organizational Flow (Half Day Sessions)
(Steps 2.11.1 to 2.11.4 to be performed in a half day (approx. 5 hrs.)

2.11.1: RECEIVE THE PART DRAWING

A. CAD operator confers with the CAM operator and draws only what is necessary for the CAM operator to program a toolpath. Once that drawing is ready, the drawing is transferred to the CAM operator.
B. CAM operator, after consulting with the CAD operator, consults with the CNC operator and fills out the Job Process Plan, defining machining order, tool paths, tool definitions and sequencing.
C. CNC operator sets up the Virtual CNC Machine and the CNC operator confers with the CAM operator on tool definition and sequencing. The CNC operator virtually sets and mounts selected tools in holders and sets tool length offsets in the CNC control software. The CNC operator then sketches the fixture.

2.11.2: CAD OPERATOR TRANSFERS FILE TO CAM

A. CAD operator copies the CAM transfer file to USB Memory device to be transferred to the CAM operator, then begins work on documenting the part with all necessary views.
B. CAM operator transfers in the CAD file and double checks against the supplied drawing. The CAM operator begins programming tool paths and, if necessary, documents any changes to the Job Process Plan.
C. CNC operator helps either the CAD or CAM operator, staying aware of CAM toolpath sequencing and tool changes. CNC operator could also study part for most efficient tool paths.

2.11.3: TRANSFER OF NC-CODE TO "VIRTUAL" CNC MACHINE

A. CAD operator continues to document part and prints the dimensioned CAD drawing.
B. CAM operator transfers NC-Code to the CNC operator.
C. CNC operator loads the program, runs a simulation, Virtual CNC. (sets the touch off point, and then runs the program in Virtual CNC.)

2.11.4: "VIRTUAL" PROTOTYPE COMPLETE, QUALITY CONTROL

A. Each team member inspects the virtual part and fills out inspection sheet. If errors are found, they are documented and the "virtual" part "observed/judged" and is submitted for participation in 2.11.6.

(Steps 2.11.5 and 2.11.7 to be performed from on the second day)

TOP FIVE (5 secondary and 5 post-secondary) TEAMS Qualify to move on to Steps 2.11.5, 2.11.6 and 2.11.7

2.11.5: same as above 2.11.1-2.11.3

2.11.6: MANUFACTURE FINISHED PART ON CNC MACHINE

A. CAD operator completes all part documentation and hard copies.
B. CAM operator assembles part documentation booklet and assists CAD and CNC operators.
C. CNC operator manufactures and inspects part.

2.11.7: QUALITY CONTROL AND FINAL HAND-IN

A. CAD, CAM, and CNC operators complete part inspection, documentation, and work area cleanup.

3: Safety

3.1: Importance of Safety

To maintain an effective and competitive company, it is in the best interest of both employer and employee to maintain a safe work environment. When a company's history of incidents resulting in injury is minimal, the company increases its likelihood of reduced insurance rates and workman compensation fees.

Safety considerations are taken into account during judging to further replicate a professional industrial environment.

3.2: Safety Violations

If a team or a team member violates a safety rule, or operates their work cell in an unsafe manner, the following penalties will be enforced:

1st Violation:
Team will be issued a written warning.

2nd Violation
Team will have 50 points deducted from their total score.

3rd Violation
Team will be disqualified.

3.3: Avoiding Safety Hazards

Some safety issues:

1. Team members must keep their work area reasonably clean. Clean work places promote efficient and safe working conditions.
2. Team members must keep their teammates and other teams aware of possible dangerous situations, such as flying chips, noise, possible tool breakage, etc.
3. Safety guards must be in place and properly interlocked during machining and when the spindle is turning.
4. Team members must wear safety glasses when they are in the proximity of the machine during setup as well as during machining.
5. Spindle must NOT be in motion during a tool change.
6. Tampering with or dismantling of any part of the supporting equipment (ie: computers, printers, ect.) is a direct safety violation, and can be grounds for immediate disqualification.

4: Additional Forms

4.1: Document Submission

The following documentation must be prepared by teams for judging. These sheets are included on the following pages of this team information packet:

- Notebook Judging Form
- Process Plan
- Fixturing Description
- Quality Assurance
- Mathematics Problem

4.2: Judge Prepared Documentation

Judges will prepare the following documentation for each team:

- CAD Evaluation
- Interview/Test
- Hand-In Time Run
- Concurrent Engineering CAD Evaluation
- Area Clean-Up
- Safety Violations (if applicable)

SKILLS USA
AUTOMATED MANUFACTURING TECHNOLOGY

NOTEBOOK JUDGING FORM 2015

	MAXIMUM POINTS	CHECK	POINTS AWARDED
CAD Rapid Prototype			
1. Dimensioned Print of Prototype, Hardcopy (top and front views)	170		
2. Prototype Contest Drawing	25		
CAD Subtotal	**195**		
CAM Rapid Prototype			
1. Process Plan Form	100		
CAM Subtotal	**100**		
CNC Rapid Prototype			
1. Fixturing Description Form	80		
2. Quality Assurance Form	50		
3. Interview/Test	150		
4. Hand-In-Time	100		
CNC Subtotal	**380**		
Concurrent Engineering			
1. CAD Drawing (top, front, side & pictorial), Hard Copy	100		
2. Engineering Change Order Drawing	25		
3. Process Plan Form	75		
4. Area Clean-up	75		
Concurrent Engineering Subtotal	**275**		
Math Problem	50		
Safety (deductions)			
GRAND Total	**1000 pts**		

AUTOMATED MANUFACTURING TECHNOLOGY

PROCESS PLAN

TEAM NUMBER _____ **CUSTOMER** _____

COMPLETED BY _____

DATE _____ **PART DUE DATE** _____

PART NAME _____

PART NUMBER _____ **CNC MACHINE** _____

BLANK SIZE _____ **MATERIAL** _____

Operation #	Operation Description	Tool #	Tool Description	Spindle Speed	Feed Rate	Plunge Rate

NOTES _____

_____

_____

Possible Pts. 100

Total _____

Team # _____

AUTOMATED MANUFACTURING TECHNOLOGY

FIXTURING DESCRIPTION

TEAM NUMBER _____ **CUSTOMER** _____

DRAWN BY _____

DATE _____ **PART DUE DATE** _____

PART NAME _____

PART NUMBER _____

SKETCH FIXTURE WITH TOOL TOUCH-OFF INDICATED

Possible Pts. 80

Total _____

Team # _____

AUTOMATED MANUFACTURING TECHNOLOGY

QUALITY ASSURANCE FORM

TEAM NUMBER _____ **CUSTOMER** _____

COMPLETED BY _____

DATE _____ **PART DUE DATE** _____

PART NAME _____

PART NUMBER _____ **CNC MACHINE** _____

BLANK SIZE _____ **MATERIAL** _____

Object #	Object Description	Defined Tolerance	Dimension Margin	
			High	Low

Identify errors on picture

NOTES _____

_____

_____
Signature

_____
Signature

_____
Signature

Possible Pts. 50

Total _____
Team# _____

AUTOMATED MANUFACTURING TECHNOLOGY
CONCURRENT ENGINEERING
PROCESS PLAN

TEAM NUMBER _____ **CUSTOMER** _____

COMPLETED BY _____

DATE _____ **PART DUE DATE** _____

PART NAME _____

PART NUMBER _____ **CNC MACHINE** _____

BLANK SIZE _____ **MATERIAL** _____

Operation #	Operation Description	Tool #	Tool Description	Spindle Speed	Feed Rate	Plunge Rate

Possible Pts. 75

Total _____

Team # _____

Automated Manufacturing Technology

Math Problem Day 1

2015

Your R&D department at Golden Design Group, has been asked to provide a prototype production run of a component as designed by the client, Chicago Acoustic. A rapid response is essential to capture new business. The client requires that you provide a total of 6 prototypes of the Component. These will be shipped in equal quantities to 3 testing labs for final inspection and testing.
The prototype component has 3 pieces. The component consists of a Top and a Bottom with an Insert.
The raw stock measurements are:
Material block 1 Piece: 2.2” x 2.5” x 1”
Material block 2 Pieces: 6.5” x 5.5” x 1.25”.

The complete prototype will be made of Ren Board-440. The Ren Board is supplied in standard sheets measuring 18” x 18” x 1.5”. The machine overhead rate is assumed to cost $90.00 per hour. It is estimated to take 20 minutes to make one prototype. Each prototype has a material cost of $7.50. The “Additional” cost to assemble, package, and ship each set is $9.00.
Please answer the following questions. When answering DO NOT allow for waste material from the saw blade used to cut the parts to size. Each question is worth 5 points. TOTAL 50 Points.
NOTE: This math problem is similar too but does not resemble the exact dimensions of your prototype parts, made in the AMT competition.

1. What is the total cost of one complete prototype, manufactured, assembled and shipped?_____
2. How many prototypes will ship to each testing lab? _____
3. Calculate the machine operation time to make all prototypes? _____
4. Calculate the material cost to manufacture all prototypes? _____
5. Calculate the machine overhead cost for one Prototype. _____
6. Calculate the area (square inches) of Ren Board in a standard sheet? _____
7. How many prototypes are required to complete the order for the client? _____
8. Calculate how much more each prototype will cost if machine overhead was $120 per hour? _____
9. Calculate the total cost savings if the “Additional” cost of $9.00 was cut to $7.00? _____
10. Calculate the volume (cubic inches) of Ren Board in a standard sheet? _____

NOTE: Round your answer up to a two place decimal.

Automated Manufacturing Technology

Math Problem Day 1

2015

Your R&D department at Golden Design Group, has been to asked provide a prototype production run of a component as designed by the client, Chicago Acoustic. A rapid response is essential to capture new business. The client requires that you provide a total of 6 prototypes of the Component. These will be shipped in equal quantities to 3 testing labs for final inspection and testing.
The prototype component has 3 pieces. The component consists of a Top and a Bottom with an Insert.

The raw stock measurements are:
Material block 1 Piece: 2.2” x 2.5” x 1”
Material block 2 Pieces: 6.5” x 5.5” x 1.25”.

The complete prototype will be made of Ren Board-440. The Ren Board is supplied in standard sheets measuring 18” x 18” x 1.5”. The machine overhead rate is assumed to cost $90.00 per hour. It is estimated to take 20 minutes to make one prototype. Each prototype has a material cost of $7.50. The “Additional” cost to assemble, package, and ship each set is $9.00.

Please answer the following questions. When answering DO NOT allow for waste material from the saw blade used to cut the parts to size. Each question is worth 5 points. TOTAL 50 Points.
NOTE: This math problem is similar too but does not resemble the exact dimensions of your prototype parts, made in the AMT competition.

1. What is the total cost of one complete prototype, manufactured, assembled and shipped?_____
2. How many prototypes will ship to each testing lab? _____
3. Calculate the machine operation time to make all prototypes? _____
4. Calculate the material cost to manufacture all prototypes? _____
5. Calculate the machine overhead cost for one Prototype. _____
6. Calculate the area (square inches) of Ren Board in a standard sheet? _____
7. How many prototypes are required to complete the order for the client? _____
8. Calculate how much more each prototype will cost if machine overhead was $120 per hour? _____
9. Calculate the total cost savings if the “Additional” cost of $9.00 was cut to $7.00? _____
10. Calculate the volume (cubic inches) of Ren Board in a standard sheet? _____

NOTE: Round your answer up to a two place decimal.

Automated Manufacturing Technology

Math Problem Day 1

ANSWER KEY

2015

Q1. $46.50 ($30 + $7.50 + $9.00)

Q2. 2 prototypes for each testing lab (6 Prototypes going equally to 3 labs).

Q3. 2 Hours (6 X 20 mins. = 120 Mins OR 2 Hrs.)

Q4. $45.00 (6 x $7.50)

Q5. $30.00 ($90/hr divided by 3) (20 Mins. per prototype = 1/3 Hour)

Q6. 324 square inches (18” x 18”)

Q7. 6 Prototypes.

Q8. $10.00 (at $120 per hour each prototype is $40. Original cost $30. Therefore $10 additional cost per prototype).

Q9. $12 (If “Additional Cost” is cut to $7 from $9. Total savings for 6 prototypes is 6 x $2 = $12).

Q10. 486 Cubic Inches (18”x18”x1.5” = 486 cubic inches).

NOTE: Round up all dimensions to a two place decimal

2015 SKILLS USA CHAMPIONSHIP

AUTOMATED MANUFACTURING TECHNOLOGY COMPETITION

TEAM GUIDE

Contents

Acknowledgments 1
AMT Competition Technical Committee 2
Judges 3
National Educational Technical Committee 4
Awards 4
1: Contest Overview 5
1.1: Statement of the Problem 6
1.2: Instructions 6
1.3: Guidelines 7
1.4: QA and Design Restrictions 7
1.5: Team Guidelines 8
2: Official Competition 9
2.1: Purpose 9
2.2: Clothing Requirement 9
2.3: Eligibility 9
2.4: Scope of Contest 10
2.5: Group Organizational Goal 12
2.6: General Information 12
2.7: Goals 12
2.8: Notebook 12
2.9: Required Materials 13
2.10: Division of Duties 14
2.11: Suggested Organizational Flow 15
3: Safety 16
4: Additional Forms 17
Notebook Judging Form 19
Process Plan 21
Fixturing Description 23
Quality Assurance 25
Concurrent Engineering Process Plan 27
Math Problem 29

Acknowledgments

The success of the competition is the result of the motivated contestants and their instructors, the determined efforts of the National and State Technical Committees, and the generosity of companies donating equipment. The following companies have contributed resources and support.

Intelitek, Inc.
AutoDesk, Inc.
CNC Software, Inc.
Calculated Industries
River Valley Technical Center
MSC
3Dconnexion Inc.
Rolla Technical Institute
SolidWorks
Learning Labs
LS Starrett
Verisurf
CG Tech

AMT Competition Technical Committee

The following individuals contributed their time and energy to the Technical Committee.

Richard McManus
Aztech Educational Resources

Rick Knisely
Aztech Educational Resources

Jeff Stone
Intelitek

Alex Taliadouros
Intelitek

Dan Newby
CNC Software

Robert Clarke
Intelitek

Richard Walker
National Tooling & Machining Assoc.

Dustin Spieth
CNC Software

Judges

The following individuals contributed their time and energy as Judges for the competition.

Rick Knisely
Aztech Educational Resources

Dan Newby
CNC Software

Ray Ellege
Verisurf

Mike McDonald
CG Tech

Sheldon Richardson
Learning Labs

Steve Bardonner
Ivy Technical Community College

Ben Richardson
Learning Labs

Dustin Spieth
CNC Software

National Educational Technical Committee

The following individuals contributed their time and energy to the National Educational Technical Committee.

Don Block, Chairperson
Rolla Technical Institute

Jeffrey Fisher
South Central Technical College

Samuel Dolson
Manteca High School

George Skena
Old Dominion University

Rick Huddleston
Tulsa Technology Center

Jon Morgan
South Central College

Awards

The following companies have supplied awards:

Intelitek, Inc

Solidworks

CNC Software Inc.

3Dconnexion Inc.

MSC

1: Contest Overview

1.1: Time Schedule for Contest

On the first day of competition teams will have a half day (approximately 5 hours) to complete a Virtual Part as defined by "Organizational Flow" Steps 2.11.1 to 2.11.4. The top 5 teams for secondary, and the top 5 teams for post-secondary as selected by the judges will return for the second day to complete Steps 2.11.5 to 2.11.7 working on the Benchmill 6000 CNC Machine to manufacture the final part.

1.2: Cutting-edge Technology

Current advances in manufacturing technologies such as CAD, CAM, and CNC, have allowed the United States to remain competitive within the global market. To compete in this evolving field, companies worldwide must remain at the forefront of both current and emerging technologies in design and manufacturing. With today's complex design and manufacturing challenges, no individual is equipped with all the answers, so it is imperative for manufacturers to combine the resources and abilities of a team to resolve problems.

1.3: Your Team

Success in Automated Manufacturing is often found using a team approach. In the interest of emulating industry, this competition will be structured in this manner. Proving of part design in a "Virtual CNC Machine" is an industry cost savings process. For optimum team efficiency, we suggest your team be comprised of a specialist in each of the following fields:

- Computer Aided Design (CAD)
- Computer Aided Manufacturing (CAM)
- Computer Numeric Control (CNC)

1.4: Cost Reduction

Rapid Prototyping and Concurrent Engineering are two of the most efficient methods used by industry to reduce the time and cost of bringing a new product from concept to market. Rapid Prototyping is simply the development of a prototype as quickly as possible. Concurrent Engineering is the pairing of the designer with the manufacturer to simultaneously work on the design of the product throughout the development of the product in its entirety.

1.1: Statement of the Problem

1.1.1: The Client's Needs

D&J Industries, Incorporated (hereafter referred to as The Client) is dissatisfied with its old supplier. They used manual machines causing the part signatures to have an unacceptable variance, their quotations were inaccurate, and their lead-time was unacceptable.

It is critically important that The Client locate a firm able to rapid prototype and meet engineering changes at any point of the prototyping process. The Client wishes to find the best shop to have the part(s) prototyped and manufactured.

As an Automated Manufacturing Technology team, known as Pro Design, Incorporated, your company will be competing for this lucrative contract against several other firms.

1.1.2: Your Assignment

Pro Design has been presented with a sample part drawing that the Client wishes to have mass produced. Your team will need to prototype the part(s), incorporate any changes that the client might make, then manufacture the final product.

Pro Design's Team Leader is responsible for communication between your company and D&J Industries, Incorporated.

1.2: Instructions

1.2.1: Rapid Prototype

The Client is a manufacturing plant that needs a new product designed and created. Currently, the only information they can supply is a rough concept and drawing. The prototype material (Ren board-440) will be provided by the client. Your team's job is to machine this assembly prototype.

The Client requires that each stage of the CAD/CAM/CNC process be well documented, including a properly dimensioned CAD print for each of the components. All drawings should meet proper guidelines for engineering drawings.

After your prototype has been cut and has passed your internal quality control, you will submit it to The Client's Quality Assurance Group. The Client has specified accuracy, finish, and the turn-around-time it takes to complete the process.

1.2.2: Concurrent Engineering

The Client will review the prototype and may require one or more changes. The Client requires quick updates to product design throughout the development process. Significant issues in this stage are The Client's specified dimensional accuracy, finish, and efficiency in part programming.

1.3: Guidelines

1.3.1: Requirements

The Client's Engineering Project Manager has provided an outline of materials to begin your planning and manufacturing process. Your success on this project is based upon the following criteria:

1. Provide complete documentation of your design.
2. Provide complete documentation of process plan, tooling and setup.
3. Provide Quality Assurance on all parts.
4. Use the technology in preparation of documentation, setups, design, and machining properly.
5. Package completed project with accompanying documentation in an orderly, professional presentation.
6. Use team work in project management effectively.
7. Take safety precautions in the manufacturing process.
8. Use time, materials, and resources effectively.

1.4: QA and Design Restrictions

1.4.1: Tolerances

1. Hole Locations = + OR - .005"
2. Hole Diameter = + OR - .003" on finished holes
3. Slot Dimension = + OR - .005"
4. Hole Depths = + OR - .010"
5. Slot and Shoulder Locations = + OR - .010"

1.5: Team Guidelines

1.5.1: Production Guidelines

Your team should follow these guidelines:

1. Primary responsibilities and duties are organized.
2. A team leader is identified to interact with Technical Committee representatives.
3. Your team decides upon appropriate break times with the exception of the mandatory lunch break.
4. Breaks are to be taken within assigned individual work areas.
5. Team members must notify a Technical Committee representative before taking a bathroom break. Only one team member is allowed to leave the contest area at a time.
6. You must create a separate file of your CAD drawing on your CAD computer and transfer it to your CAM computer via USB memory stick.

1.5.2: Equipment Malfunctions

IN THE CASE OF A MACHINE FAILURE: The team leader will communicate the problem to a representative of the Technical Committee. The representative will then notify the Project Manager.
If it is determined that it is in fact a machine problem, the running time clock may be stopped for that team. In the case of a stopped time clock, all work will stop for the entire team until the problem is resolved.

IN THE CASE OF SOFTWARE PROBLEMS: The choice of CAD and CAM software is the responsibility of the team. All software must be original copies. If your team develops a problem with your software, the Technical Committee will work in whatever way it can to resolve the problem but the clock will not be stopped.

2: Official Competition

2.1: History

This competition is officially sanctioned by SkillsUSA and has run continuously since 1994. This competition is unique due to its three-member team concept and the intensive use of hardware and software.

2.1: Purpose

2.1.1: Goals of the Competition

To evaluate each contestant's preparation for employment in automated manufacturing and the team approach to problem solving in the work environment. To recognize outstanding students for excellence and professionalism in the field of automated manufacturing technology.

2.2: Clothing Requirement

2.2.1: Correct Attire

- official khaki work shirt
- official khaki work pants
- black or brown leather work shoes
- safety glasses with side shields or goggles (prescription glasses must be covered with goggles unless they are equipped with side shields)

To purchase official work clothing, contact Midwest Trophy Manufacturing Co., Inc. by calling 1-800-324-5996 or order online at: http://www.mwtrophy.com/.

2.3: Eligibility

2.3.1: Qualifications

This competition is open to active SkillsUSA members enrolled in programs with precision machining, automated manufacturing, or CAD/CAM or CNC as their occupational objective.

2.4: Scope of Contest

2.4.1: Teams and Documentation

1. Teams MUST be composed of three members. Teams will demonstrate their ability to perform, utilize skills and knowledge necessary to complete the project as presented to them by the Technical Committee.

2. Your team is presented with a dimensioned drawing(s) of a part(s) to prototype. When you finish machining the prototype part(s) you will present it to The Client (judges). Proceed to machine final product.

3. Each team will be issued a notebook. This will include all of the necessary information and forms to complete the project. These forms will not be highly specific but will coach the teams. All forms and drawings must be turned in to the judges at the end of the competition.

2.4.2: Required Competencies

Successful competitors possess the following skills:

A. Mathematics and Measurement
   1. Measure to the nearest .001 inch
   2. Calculate CNC speed and feeds
   3. Calculate stock utilization and setup
   4. Calculate tolerances
   5. Estimate costs and material usage and write an evaluation

B. Designing, Sketching, Planning
   1. Translate information from drawing to CAD
   2. Create CAD file for manufacturing
   3. Manufacturing documentation
   4. Process plan
   5. Plot CAD file
   6. Export CAD file
   7. Process Engineering Change Orders (ECOs)

C. Create Toolpath (CAM file), CNC Code
   1. Create Process/Job Plan
   2. Read-in CAD export file
   3. Create toolpath
   4. Verify toolpath
   5. Create CNC code
   6. Send CNC code to machine tool
   7. Process ECO

D. Perform CNC Machining Functions
   1. Verify CNC file
   2. Verify toolpath
   3. Setup part blank on mill
   4. Set all offsets and tooling
   5. Adjust speeds and feeds as needed
   6. In-process Quality Assurance
   7. Perform tool changes
   8. Perform multiple machining operations in one setup
   9. Verify (TQM) process and part

   10. Process

E. Inspect Part TQM Process
   1. Verify part to standards
   2. Verify part to ECO standards
   3. Document process

F. Safety

1. Follow proper safety procedures in a general industrial workplace environment.
2. Follow proper safety procedures in running and programming a CNC Machine tool.

G. Quotation

1. Take a written evaluation that measures ability to solve various solutions to the process that is involved to quoting a job in a rapid prototyping environment.

2.5: Group Organizational Goal

2.5.1: Team Dynamics

The competition should run much like you would expect from industry; with group members interacting at will. The CAD operator will construct the part geometry, the CAM operator will generate the toolpaths, and the CNC operator will do the setup and machine the part.

The contest is designed to promote creativity in organization of production responsibility. Teams should divide duties among all team members. No one individual should dominate by taking responsibility for more than one project specialty. When a team member has spare time, they will help their teammates. All Team members are responsible for double-checking each other's work and quality control.

2.6: General Information

2.6.1: Necessities

The following items are required to compete in this contest:

1. Intelitek CNCMotion **Virtual Software** will be provided. (Virtual CNC Machine)
2. Intelitek's Benchmill 6000 series CNC milling machines and tooling will be provided.
3. Teams must provide two computers, one of which must accept an Ethernet connection.
4. Each team will have licensed versions of CAD/CAM software.
5. Each team will provide a 6" dial or digital Vernier caliper. Dial indicator (i.e. Starrett Last Word Dial Test Indicator, must have 3/8" holding shank), a calculator, a set of ¾ "and/or 1" parallels (or a complete set), 6" or 12" steel rule and a soft face hammer.
6. Teams must consist of 3 members.
7. The Prototype and the finished part will be machined in a prototype material.
8. Each team can provide 3/8 edge finder.
9. Each team can provide a set of parallels.
10. Each team can provide appropriate sized end mills.
11. Each team must provide a machinist handbook.
12. Each team must provide USB Memory Device (thumb drive) for file transfer.

splourde 9/11/2008 8:47 AM
Deleted: :

2.7: Goals

2.7.1: Team Objectives

1. To have every team complete the competition.
2. To have each team member demonstrate reading and writing skills.
3. To have each team member use their critical thinking and problem solving abilities in the contest.
4. To have each team member illustrate responsibility, teamwork, self-management skills, and professionalism.

2.8: Notebook

2.8.1: Supplied Documentation

Each team is issued this notebook and information packet. This will allow the team to display a plot or print of their operation. Required documentation is also included.

2.9: Required Materials

2.9.1: Workstation Components

Teams require the following materials to complete the competition. The Technical Committee provides many of these materials, but the teams must also bring certain items.

AMT Technical Committee provides:

- Intelitek's Benchmill 6000 CNC Machining Center with:
  - Machinist vise
  - Hold-downs and clamps
  - Tool holders
- Part(s) design.
- Competition notebook.
- Pencils.
- Prototype Material for machining.
- Information and furnishings for judges and technical committee.

2.9.2: Team Provided Components

Teams provide:

- Two computers:
  - One computer loaded with CAD software for CAD program.
  - One computer loaded with software for CAM program. This computer MUST have an open LAN Port (Ethernet connection) and Windows XP SP3 / Vista / 7 - 32 or 64bit.
- Licensed versions of the above CAD and CAM software must be available at start of the orientation for loading onto the technical committee's computer(s).
- One six inch dial or digital vernier caliper.
- One dial indicator (example: L.S. Starrett Last Word dial test indicator) Dial indicator MUST have 3/8" holding shank to fit into tool holder supplied by Technical Committee.
- One calculator.
- One pair of ¾" and/or 1" parallels (or a complete set).
- One soft-face hammer
- One 6" or 12" steel rule.
- Each team can provide 3/8 edge finder.
- Each team must provide a machinist handbook.
- Each team can provide appropriate size end mills.
- Each team must provide a USB memory device.

Note: ONLY the above listed items will be allowed in the contest area during the competition.

2.10: Division of Duties

2.10.1: Department Contributions

Process Documentation Notebook	*Possible Division of Duties*
CAD Department Stage 1, Rapid Prototype Original print CAD dimensioned views necessary to detail part completely Stage 2, Finish Part Production Change order CAD dimensioned print (views necessary to detail part completely) and pictorial view	**CAD Engineer** All CAD system import and export Creating part geometry Exporting necessary geometry to CAM system Dimensioning parts Plots Receive change order Communication of changes to team Update all CAD files All drawings should meet guidelines for engineering drawings
CAM Department Stage 1, Rapid Prototype Process documentation to include selection of tools, machining order, etc. Generate NC code Stage 2, Finish Part Production Develop new process plan Program new toolpath Generate NC code	**CAM Engineer** All CAM system input and output Importing CAD geometry Creating tool paths Process sequencing Tool selection Creating NC code
CNC Department Stage 1, Rapid Prototype Fixturing description Tool description Tool setup Fixture and set-up Stage 2, Finish Part Production Finish ECO part production	**CNC Engineer** All CNC setup and operation CNC control software input Fixturing stock, tool offsets
Quality Control Department Stage 1, Rapid Prototype Part inspection sheet, all team members sign-off All members check positions, tolerances, etc. Stage 2, Finish Part Production Part inspection sheet, all members sign All members double-check work, clean-up	**Quality Control** All Members

2.11: Suggested Organizational Flow

2.11: Suggested Organizational Flow (Half Day Sessions)
(Steps 2.11.1 to 2.11.4 to be performed in a half day (approx. 5 hrs.)

2.11.1: RECEIVE THE PART DRAWING

A. CAD operator confers with the CAM operator and draws only what is necessary for the CAM operator to program a toolpath. Once that drawing is ready, the drawing is transferred to the CAM operator.
B. CAM operator, after consulting with the CAD operator, consults with the CNC operator and fills out the Job Process Plan, defining machining order, tool paths, tool definitions and sequencing.
C. CNC operator sets up the Virtual CNC Machine and the CNC operator confers with the CAM operator on tool definition and sequencing. The CNC operator virtually sets and mounts selected tools in holders and sets tool length offsets in the CNC control software. The CNC operator then sketches the fixture.

2.11.2: CAD OPERATOR TRANSFERS FILE TO CAM

A. CAD operator copies the CAM transfer file to USB Memory device to be transferred to the CAM operator, then begins work on documenting the part with all necessary views.
B. CAM operator transfers in the CAD file and double checks against the supplied drawing. The CAM operator begins programming tool paths and, if necessary, documents any changes to the Job Process Plan.
C. CNC operator helps either the CAD or CAM operator, staying aware of CAM toolpath sequencing and tool changes. CNC operator could also study part for most efficient tool paths.

2.11.3: TRANSFER OF NC-CODE TO "VIRTUAL" CNC MACHINE

A. CAD operator continues to document part and prints the dimensioned CAD drawing.
B. CAM operator transfers NC-Code to the CNC operator.
C. CNC operator loads the program, runs a simulation, Virtual CNC. (sets the touch off point, and then runs the program in Virtual CNC.)

2.11.4: "VIRTUAL" PROTOTYPE COMPLETE, QUALITY CONTROL

A. Each team member inspects the virtual part and fills out inspection sheet. If errors are found, they are documented and the "virtual" part "observed/judged" and is submitted for participation in 2.11.6.

(Steps 2.11.5 and 2.11.7 to be performed from on the second day)

TOP FIVE (5 secondary and 5 post-secondary) TEAMS Qualify to move on to Steps 2.11.5, 2.11.6 and 2.11.7

2.11.5: same as above 2.11.1-2.11.3

2.11.6: MANUFACTURE FINISHED PART ON CNC MACHINE

A. CAD operator completes all part documentation and hard copies.
B. CAM operator assembles part documentation booklet and assists CAD and CNC operators.
C. CNC operator manufactures and inspects part.

2.11.7: QUALITY CONTROL AND FINAL HAND-IN

A. CAD, CAM, and CNC operators complete part inspection, documentation, and work area cleanup.

3: Safety

3.1: Importance of Safety

To maintain an effective and competitive company, it is in the best interest of both employer and employee to maintain a safe work environment. When a company's history of incidents resulting in injury is minimal, the company increases its likelihood of reduced insurance rates and workman compensation fees.

Safety considerations are taken into account during judging to further replicate a professional industrial environment.

3.2: Safety Violations

If a team or a team member violates a safety rule, or operates their work cell in an unsafe manner, the following penalties will be enforced:

1st Violation:
Team will be issued a written warning.

2nd Violation
Team will have 50 points deducted from their total score.

3rd Violation
Team will be disqualified.

3.3: Avoiding Safety Hazards

Some safety issues:

1. Team members must keep their work area reasonably clean. Clean work places promote efficient and safe working conditions.
2. Team members must keep their teammates and other teams aware of possible dangerous situations, such as flying chips, noise, possible tool breakage, etc.
3. Safety guards must be in place and properly interlocked during machining and when the spindle is turning.
4. Team members must wear safety glasses when they are in the proximity of the machine during setup as well as during machining.
5. Spindle must NOT be in motion during a tool change.
6. Tampering with or dismantling of any part of the supporting equipment (ie: computers, printers, ect.) is a direct safety violation, and can be grounds for immediate disqualification.

4: Additional Forms

4.1: Document Submission

The following documentation must be prepared by teams for judging. These sheets are included on the following pages of this team information packet:

- Notebook Judging Form
- Process Plan
- Fixturing Description
- Quality Assurance
- Mathematics Problem

4.2: Judge Prepared Documentation

Judges will prepare the following documentation for each team:

- CAD Evaluation
- Hand-In Time Run
- Concurrent Engineering CAD Evaluation
- Concurrent Engineering Surface Finish/ Dimensional Accuracy
- Area Clean-Up
- Safety Violations (if applicable)

SKILLS USA
AUTOMATED MANUFACTURING TECHNOLOGY

NOTEBOOK JUDGING FORM 2015

	MAXIMUM POINTS	CHECK	POINTS AWARDED
CAD Rapid Prototype			
1. Dimensioned Print of Prototype, Hardcopy (top and front views)	170		
2. Prototype Contest Drawing	25		
CAD Subtotal	**195**		
CAM Rapid Prototype			
1. Process Plan Form	100		
CAM Subtotal	**100**		
CNC Rapid Prototype			
1. Fixturing Description Form	80		
2. Quality Assurance Form	50		
3. Surface Finish/Dimensional Accuracy	150		
4. Hand-In-Time	100		
CNC Subtotal	**380**		
Concurrent Engineering			
1. CAD Drawing (top, front, side & pictorial), Hard Copy	70		
2. Engineering Change Order Drawing	25		
3. Process Plan Form	30		
4. Surface Finish/Dimensional Accuracy	100		
5. Area Clean-up	50		
Concurrent Engineering Subtotal	**275**		
Math Problem	50		
Safety (deductions)			
GRAND TOTAL	**1000 pts**		

AUTOMATED MANUFACTURING TECHNOLOGY

PROCESS PLAN

TEAM NUMBER _____ **CUSTOMER** _____

COMPLETED BY _____

DATE _____ **PART DUE DATE** _____

PART NAME _____

PART NUMBER _____ **CNC MACHINE** _____

BLANK SIZE _____ **MATERIAL** _____

Operation #	Operation Description	Tool #	Tool Description	Spindle Speed	Feed Rate	Plunge Rate

NOTES _____

_____

_____

Possible Pts. 100

Total _____

Team # _____

AUTOMATED MANUFACTURING TECHNOLOGY

FIXTURING DESCRIPTION

TEAM NUMBER _____ **CUSTOMER** _____

DRAWN BY _____

DATE _____ **PART DUE DATE**_____

PART NAME _____

PART NUMBER _____

SKETCH FIXTURE WITH TOOL TOUCH-OFF INDICATED

Possible Pts. 80

Total _____

Team # _____

AUTOMATED MANUFACTURING TECHNOLOGY

QUALITY ASSURANCE FORM

TEAM NUMBER _____ **CUSTOMER** _____

COMPLETED BY _____

DATE _____ **PART DUE DATE** _____

PART NAME _____

PART NUMBER _____ **CNC MACHINE** _____

BLANK SIZE _____ **MATERIAL** _____

Object #	Object Description	Defined Tolerance	Dimension Margin	
			High	Low

Identify errors on picture

NOTES _____

_____

_____
Signature

_____
Signature

_____
Signature

Possible Pts. 50

Total _____
Team# _____

AUTOMATED MANUFACTURING TECHNOLOGY
CONCURRENT ENGINEERING
PROCESS PLAN

TEAM NUMBER _____ **CUSTOMER** _____

COMPLETED BY _____

DATE _____ **PART DUE DATE** _____

PART NAME _____

PART NUMBER _____ **CNC MACHINE** _____

BLANK SIZE _____ **MATERIAL** _____

Operation #	Operation Description	Tool #	Tool Description	Spindle Speed	Feed Rate	Plunge Rate

Possible Pts. 30

Total _____

Team # _____

Automated Manufacturing Technology

Math Problem

2015

Competition for contracts with companies like Xfly Systems is very strong. Your R&D department at ABC Design, Incorporated, has asked your team to provide a prototype production run of an Assembly as designed by the client, Xfly Systems. A rapid response is essential to capture new business. The client requires that you provide a total of 4 prototypes of the Assembly. These will be distributed evenly to 2 different testing labs for final inspection and testing.
The prototype has 2 pieces. The assembly consists of a Top and a bottom with orientation guide pins.
The raw stock measurements are:
Material block 1 Piece: 3.8” x 5.2” x 1.5”
Material block 2 Pieces: 2.0” x 2.3” x .8”.

The complete prototype will be made of Ren Board-440. The Ren Board is supplied in standard sheets measuring 24” x 24” x 1.5”. It is estimated to take 15 minutes to make one prototype. The machine overhead rate is assumed to cost $124.00 per hour. Each prototype has a material cost of $4.35. The additional cost to assemble, package, and ship each set is $16.00. Please answer the following questions. When answering DO NOT allow for waste material from the saw blade used to cut the parts to size. Each question is worth 5 points. TOTAL 50 Points.
NOTE: This math problem is similar too but does not resemble the exact dimensions of your prototype parts, made in the AMT competition.

1. How many prototypes are required to complete the order for the client? _____
2. How many prototypes will each testing lab receive? _____
3. Calculate the area (square inches) of Ren Board are in a standard sheet? _____
4. Calculate the material cost to manufacture all 4 prototypes? _____
5. Calculate the machine overhead cost for one Prototype. _____
6. Calculate the machine operation time to make all 4 prototypes? _____
7. What is the total cost of one complete prototype, manufactured, assembled and shipped? _____
8. Calculate the cost savings per prototype if machine overhead was $100 per hour? _____
9. Calculate the total cost savings if the additional cost of $16 was cut in half? _____
10. Calculate the volume (cubic inches) of Ren Board in a standard sheet? _____

NOTE: Round your answer up to a two place decimal.

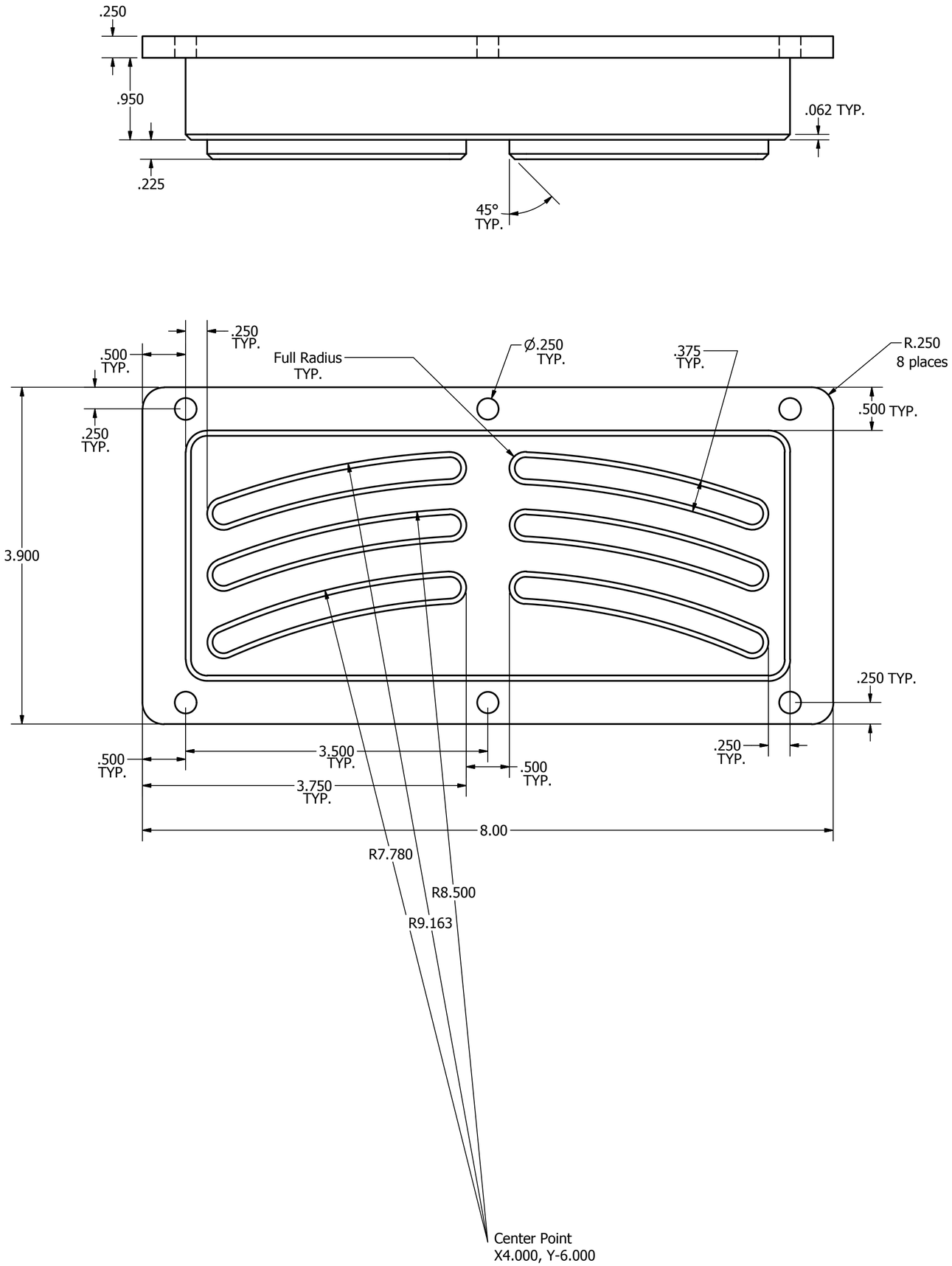

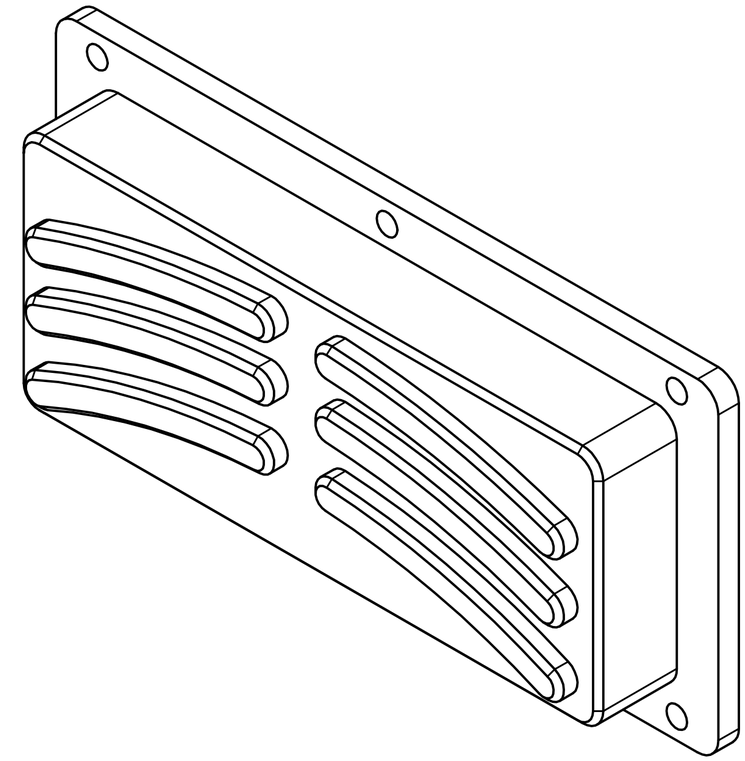

DRAWN jstone	6/6/2015			
CHECKED		TITLE		
QA		Skills 2015		
MFG				
APPROVED		SIZE C	DWG NO Insert	REV
		SCALE	SHEET 1 OF 1	

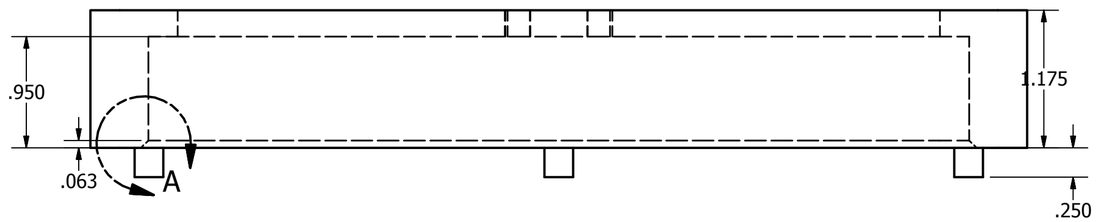

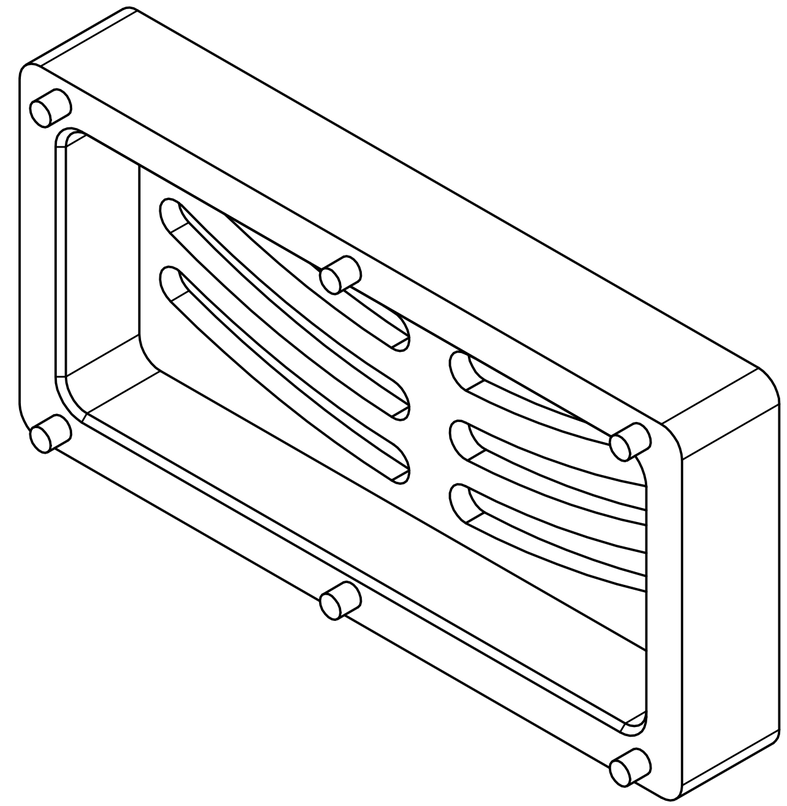

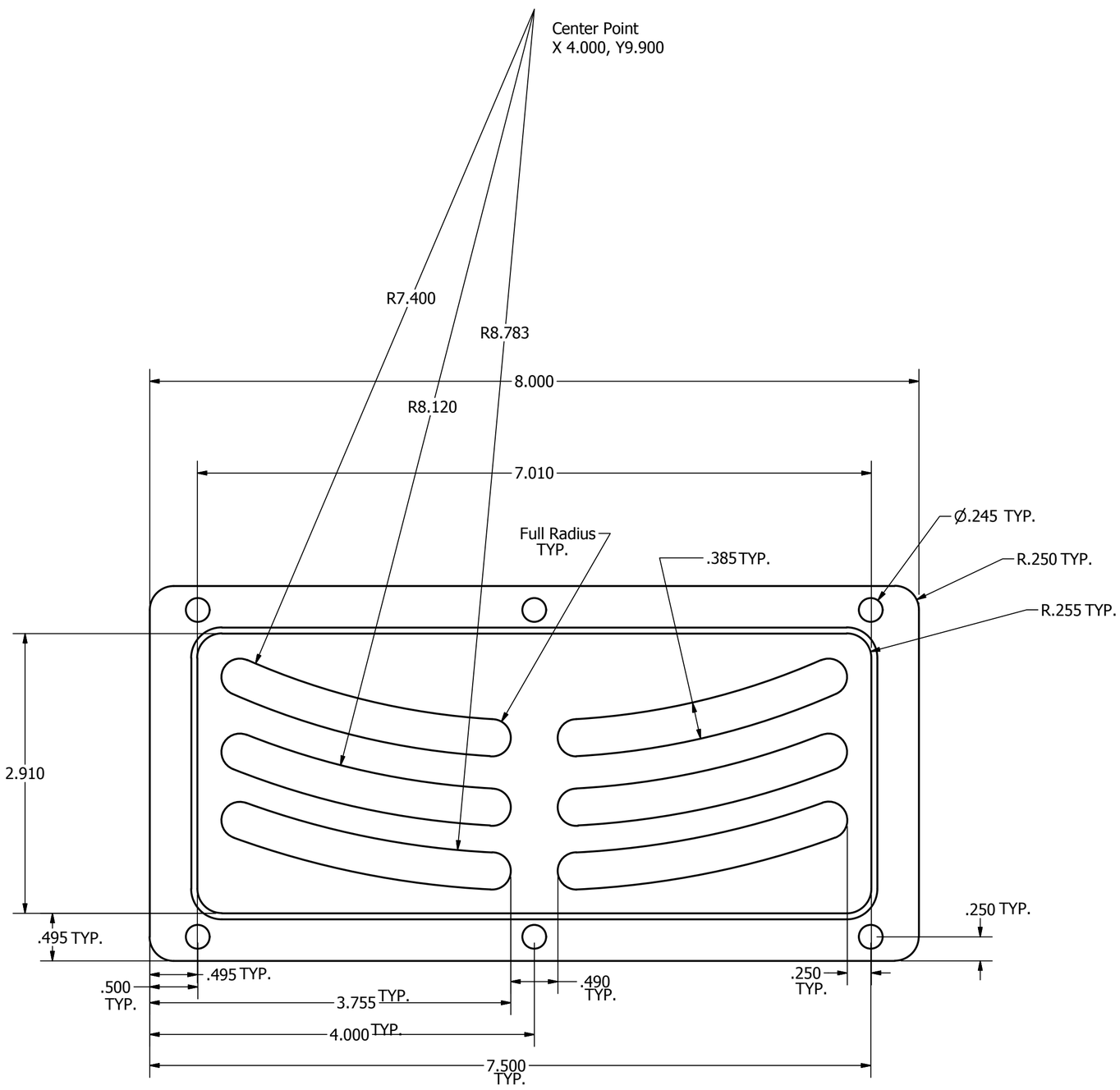

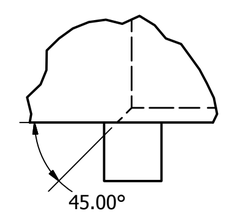

DETAIL A
SCALE 2 : 1

DRAWN jstone	6/10/2015	
CHECKED		TITLE
QA		Skills 2015 - ECO
MFG		
APPROVED		SIZE C / DWG NO Cover / REV
		SCALE / SHEET 1 OF 1

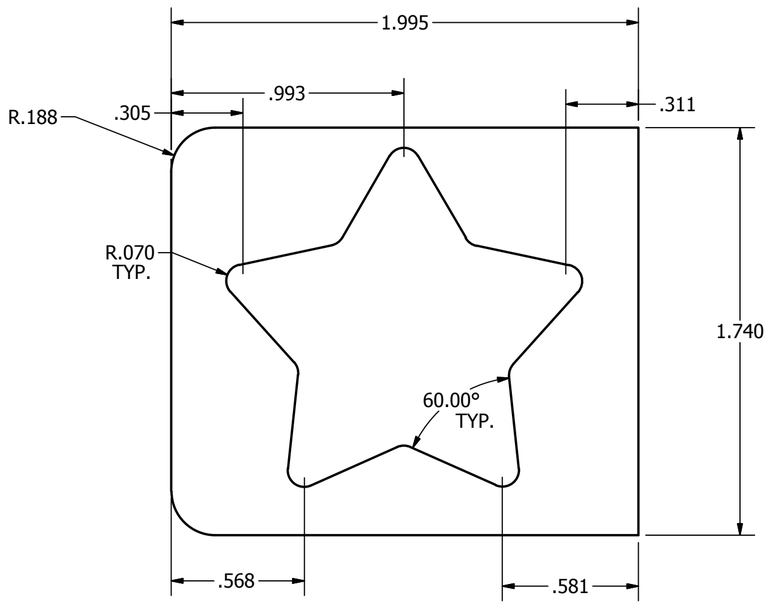

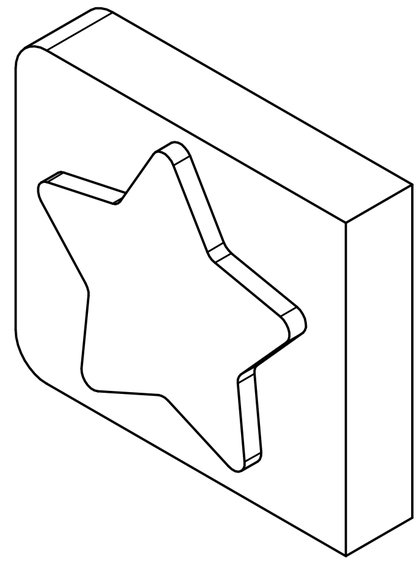

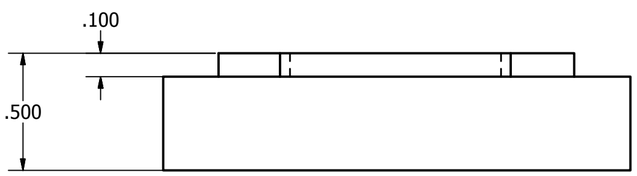

DRAWN jstone	5/27/2015	
CHECKED		TITLE Insert 1
QA		
MFG		
APPROVED		SIZE C / DWG NO SKILLS PART 2 / REV
		SCALE / SHEET 1 OF 2

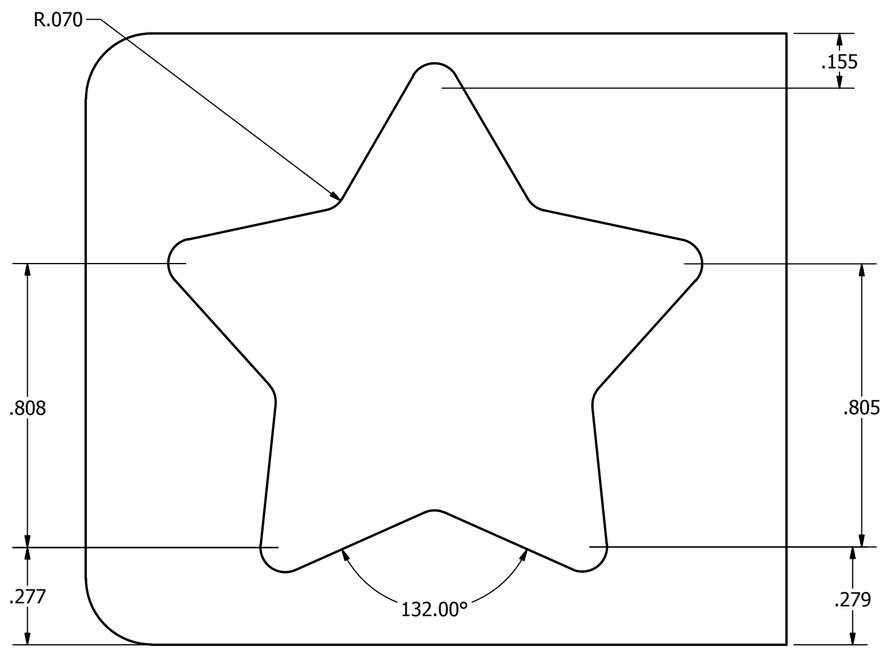

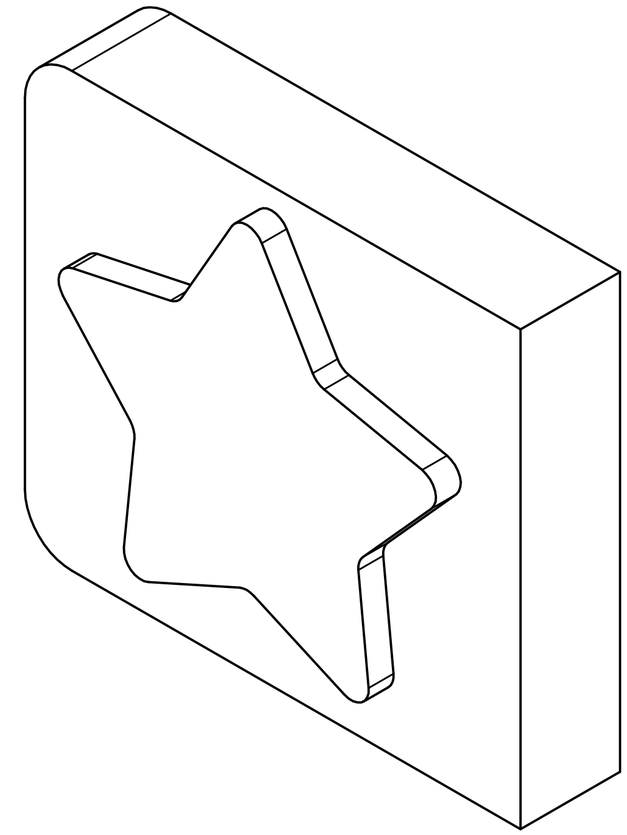

DRAWN jstone	5/27/2015	
CHECKED		TITLE
QA		Insert 1
MFG		
APPROVED		SIZE C / DWG NO SKILLS PART 2 / REV
		SCALE / SHEET 2 OF 2

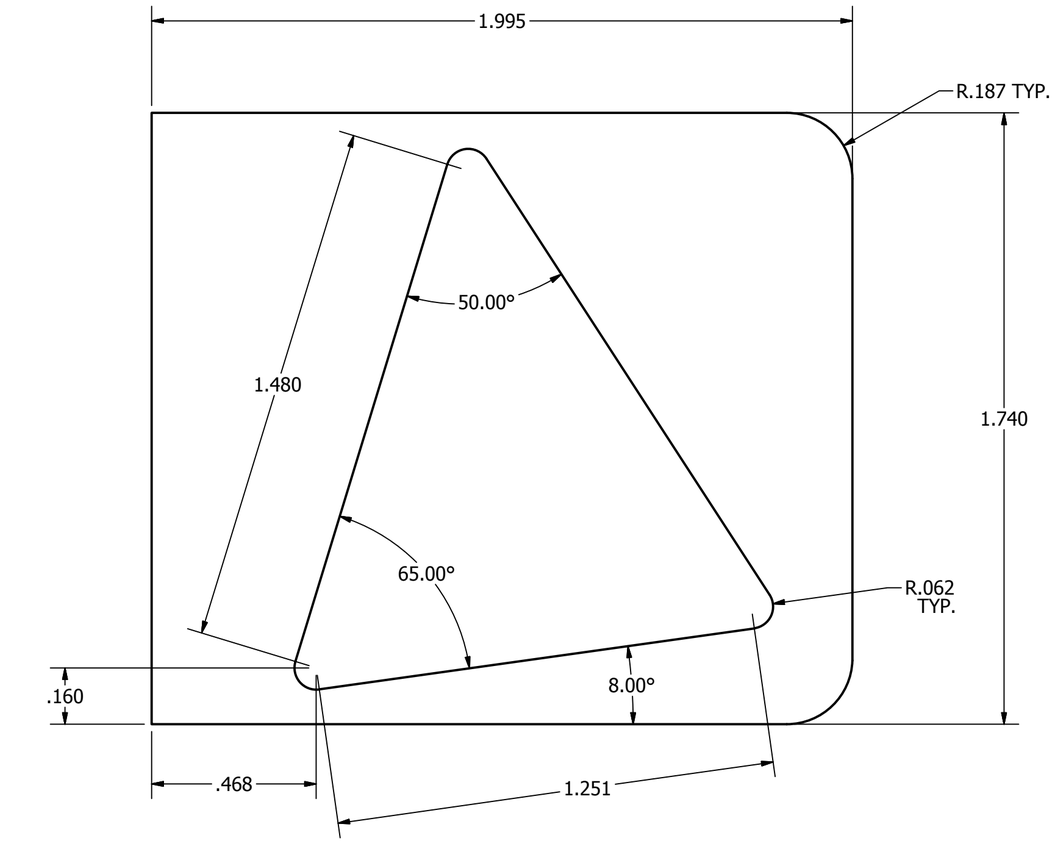

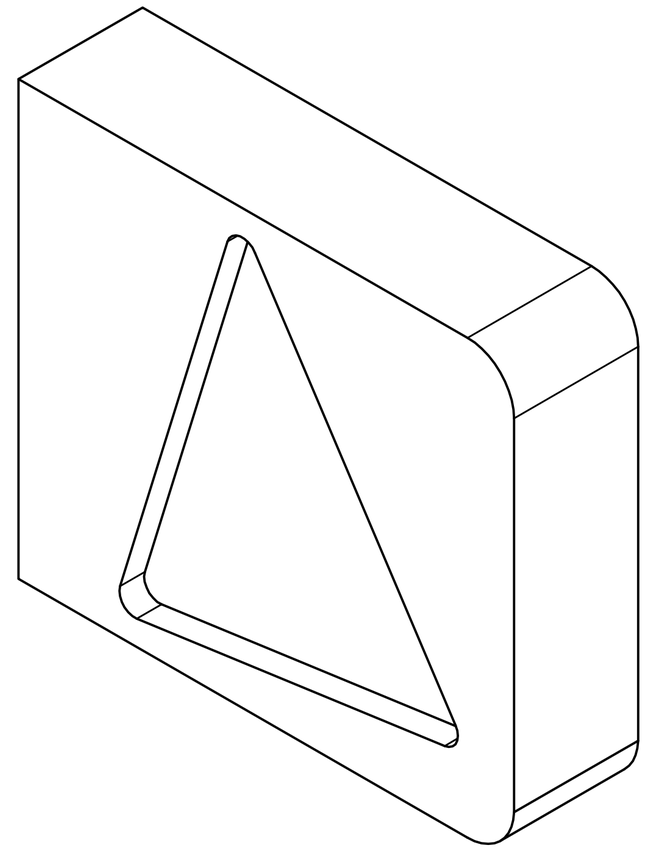

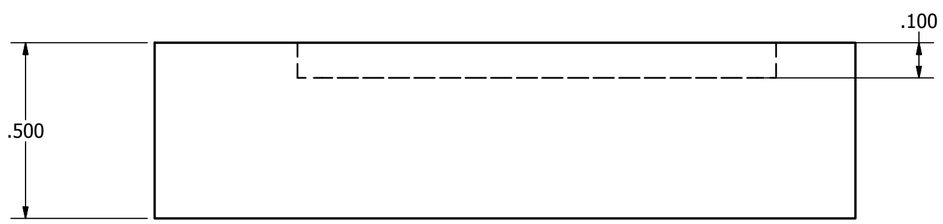

DRAWN jstone	5/27/2015	
CHECKED		TITLE Insert 2
QA		
MFG		
APPROVED		SIZE C / DWG NO SKILLS PART 3 / REV
		SCALE / SHEET 1 OF 1

Skills 2015

Station Questions

For

Students

Team #_____

Skills 2015

Station Question

Answers

Station 1

From the NC file below, plot the 4 corner points and identify the cutting direction.

```
N0; Benchmill 6000
N1; Single Tool
N2; Post Processor: Benchmill 6000 Single Tool
N3; Material Type: Machinable Wax
N4; Material Size: X3.0000 Y2.0000 Z1.5000
N5; Material Origin: X0.0000 Y0.0000 Z0.0000 (Lower Left Corner)
N6; Units: Inch
N7; Tool #1: 0.1250  1/8" End Mill
N78G90
N9G05
N10M05
N11G05
N12M03
N13;Engrave, Engrave 1
N14S5000
N15M03
N16G0Z0.1
N17G0X1.0Y0.5
N18Z0.07
N19G1Z-0.1F5
N20G1X2F15
N21Y1.5
N22X1
N23Y0.5
N24G0Z0.1
N25M02
```

Possible Points: 15

Total:

Team#

Answers to Station 1

P1 = N16G0X1.0Y0.5 (X1.0, Y.5)

P2 = N19G1X2F15 (X2.0, Y.5)

P3 = N20Y1.5 (X2.0, Y1.5)

P4 = N21X1 (X1.0, Y1.5)

Total question is worth 15 point. Each wrong piece of the answer subtract 3 points.

This question has 5 parts.
P1, P2, P3, P4, and the direction

Scoring Example:
15 (all right)
12 (1 wrong)
9 (2wrong)
6 (3 wrong)
3 (4 wrong)
0 (5 wrong)

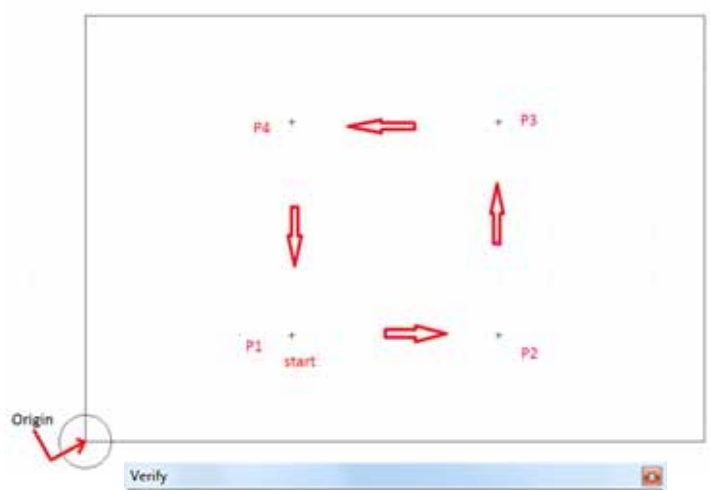

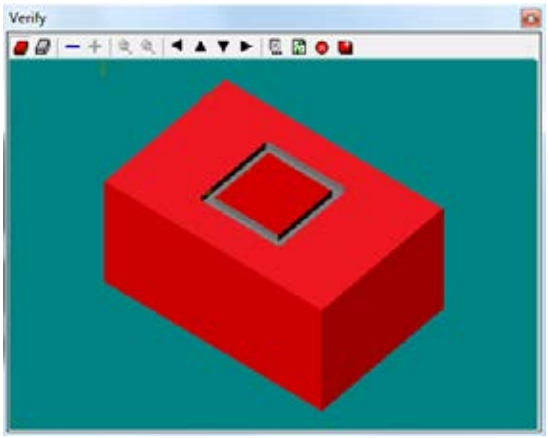

Station 2

From the NC file below, plot the center points of the circle, Plot the start point of the circle, plot the end point of the circle and identify the cutting direction.

```
N0; Benchmill 6000
N1; Single Tool
N2; Post Processor: Benchmill 6000 Single Tool
N3; Material Type: Machinable Wax
N4; Material Size: X3.0000 Y2.0000 Z1.5000
N5; Material Origin: X0.0000 Y0.0000 Z0.0000 (Lower left corner)
N6; Units: Inch
N7; Tool #2: 0.1250  1/8" End Mill
G90
N8G05
N9M05
N10G05
N11M03
N12;Engrave, Engrave 1
N13S5000
N14M03
N15G0Z0.1
N16X2.25Y1
N17Z0.07
N25G1Z-0.1F5
N28G03X1.5Y0.25I1.5J1F15
N29X1.5Y1.75I1.5J1
N30G0Z0.1
N31M02
```

Possible Points: 15

Total:

Team#

Answer to station 2

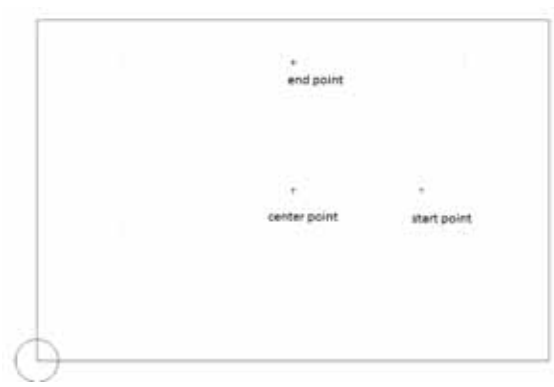

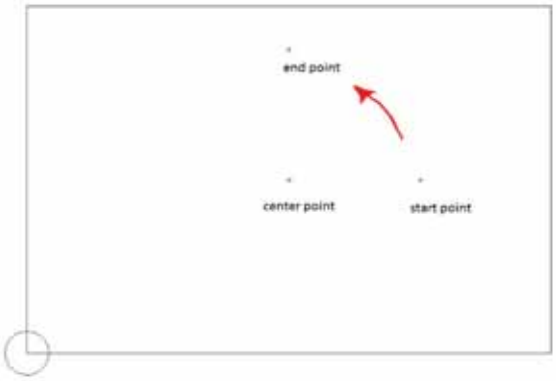

Center = X1.5, Y1.0
SP = X2.25, Y1.0
EP = X1.5, 1.75

Direction

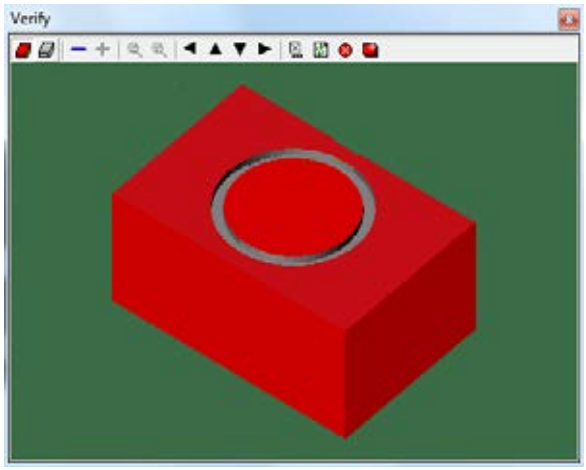

Total question is worth 15 point. Each wrong piece of the answer subtract 3.75 points.

This question has 4 parts.
Center, ST, EP, and the direction

Scoring Example:
15 (all right)
11.25 (1 wrong)
7.5 (2wrong)
3.75 (3 wrong)
0 (4 wrong)

Station 3

Using the program below describe what the characters below mean.

N0; Benchmill 6000
N1; Single Tool
N2; Post Processor: Benchmill 6000 Single Tool
N3; Material Type: Machinable Wax
N4; Material Size: X3.0000 Y2.0000 Z1.5000
N5; Material Origin: X0.0000 Y0.0000 Z0.0000
N6; Units: Inch
N7; Tool #1: 0.1250 1/8" End Mill
N78G90
N9G05
N10M05
N11G05
N12M03
N13;Engrave, Engrave 1
N14S5000
N15M03
N16G0Z0.1
N17G0X1.0Y0.5
N18Z0.07
N19G1Z-0.1F5
N20G1X2F15
N21Y1.5
N22X1
N23Y0.5
N24G0Z0.1
N25M02

Describe Each

S

G0

G1

G90

M03

Possible Points: 15

Total:
Team#

Answer to station 3

S = Spindle speed, S needs to be followed by an RPM value; sets spindle speed to 5000 RPM

G0 = Rapid Trasverse; machine moves at fast feed rate

G1 = Linear Interpolation; straight line

G90 = Absolute Positioning

M03 = Spindle rotation clockwise

Total question is worth 15 point. Each wrong piece of the answer subtract 3 points.

This question has 5 parts.

Scoring Example:
15 (all right)
12 (1 wrong)
9 (2wrong)
6 (3 wrong)
3 (4 wrong)
0 (5 wrong)

Station 4

Using the program below describe what the characters below mean.

N0; Benchmill 6000
N1; Single Tool
N2; Post Processor: Benchmill 6000 Single Tool
N3; Material Type: Machinable Wax
N4; Material Size: X3.0000 Y2.0000 Z1.5000
N5; Material Origin: X0.0000 Y0.0000 Z0.0000
N6; Units: Inch
N7; Tool #2: 0.1250 1/8" End Mill
G90
N8G05
N9M05
N10G05
N11M03
N12;Engrave, Engrave 1
N13S5000
N14M03
N15G0Z0.1
N16X2.25Y1
N17Z0.07
N25G1Z-0.1F5
N28G03X1.5Y0.25I1.5J1F15
N29X1.5Y1.75I1.5J1
N30G0Z0.1
N31M02

Describe each
F

G03

I

J

M02

Possible Points: 15

Total:
Team#

Answer to station 4

F = Feedrate, F needs to be followed by an numeric value; sets feedrate to 5IPM (inches per minute)

G03 = Circular interpolation Counterclockwise direction

I = X axis coordinate defining circle center

J = Y axis coordinate defining circle center

M02 = End of program

Total question is worth 15 point. Each wrong piece of the answer subtract 3 points.

This question has 5 parts.

Scoring Example:
15 (all right)
12 (1 wrong)
9 (2wrong)
6 (3 wrong)
3 (4 wrong)
0 (5 wrong)

Station 5

Using the image below fill in the four missing lines of code

```
%
O0000 (SKILLS TEST)
(MATERIAL - ALUMINUM INCH - 2024)
(T285 | 1/4 FLAT ENDMILL | H285)
N100 G20
N110 G0 G17 G40 G49 G80 G90
N120 T2 M6
N130 G0 G90 G54 X.5 Y.5 A0. S2139 M3
N140 G43 H285 Z.25
N150 Z.2
N160 G1 Z-.125 F6.42
N170
N180
N190
N200
N210 Z.2
N220 G0 Z.25
N230 M5
N240 G91 G28 Z0.
N250 G28 X0. Y0. A0.
N260 M30
%
```

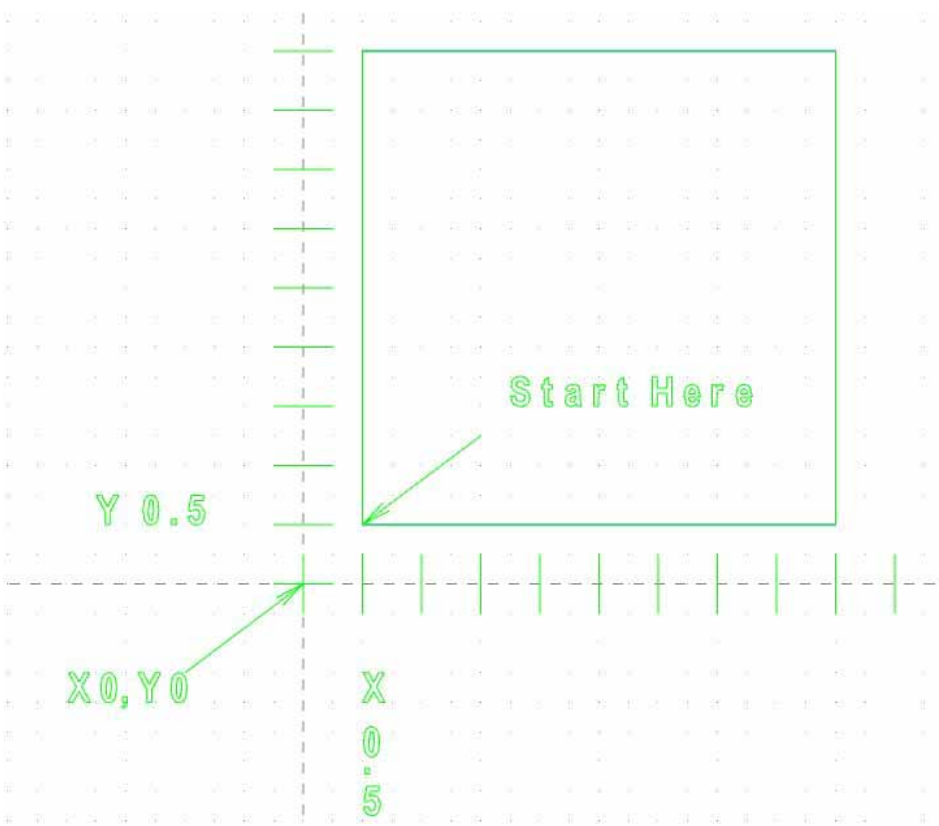

Possible Points: 15

Total:

Team#

Answers to station 5

```
N170 X4.5
N180 Y4.5
N190 X.5
N200 Y.5
```

```
Or (depending on direction)
```

```
N170 Y4.5
N180 X4.5
N190 Y.5
N200 X.5
```

Total question is worth 15 point. Each wrong piece of the answer subtract 3.75 points.

This question has 4 parts.

Scoring Example:
15 (all right)
11.25 (1 wrong)
7.5 (2wrong)
3.75 (3 wrong)
0 (4 wrong)

Station 6

Use the following NC code to plot the toolpath

```
%
O0000 (PLOT THE CODE)
(MATERIAL - ALUMINUM INCH - 2024)
(T285 | 1/4 FLAT ENDMILL | H285 )
N100 G20
N110 G0 G17 G40 G49 G80 G90
N120 T285 M6
N130 G0 G90 G54 X.5 Y.5 A0. S2139 M3
N140 G43 H285 Z.25
N150 Z.2
N160 G1 Z-.125 F6.42
N170 X4.5
N180 Y2.75
N190 X2.5 Y4.5
N200 X1.5
N210 Y4.
N220 X1. Y3.5
N230 X.5
N240 Y.5
N250 Z.2
N260 G0 Z.25
N270 M5
N280 G91 G28 Z0.
N290 G28 X0. Y0. A0.
N300 M30
%
```

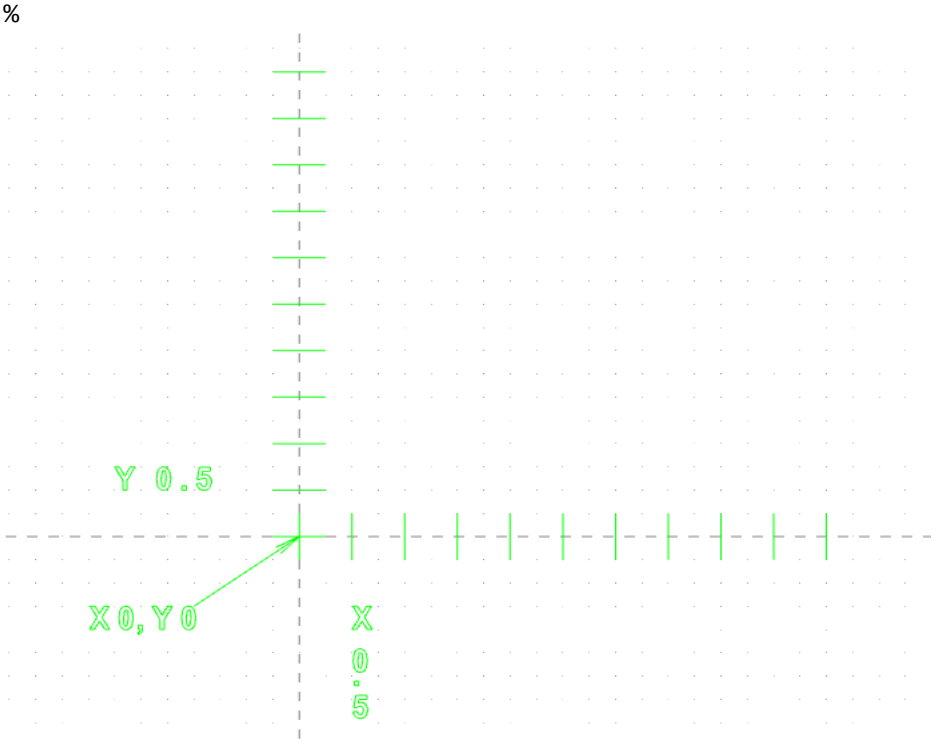

Possible Points: 15

Total:

Team#

Answer to station 6

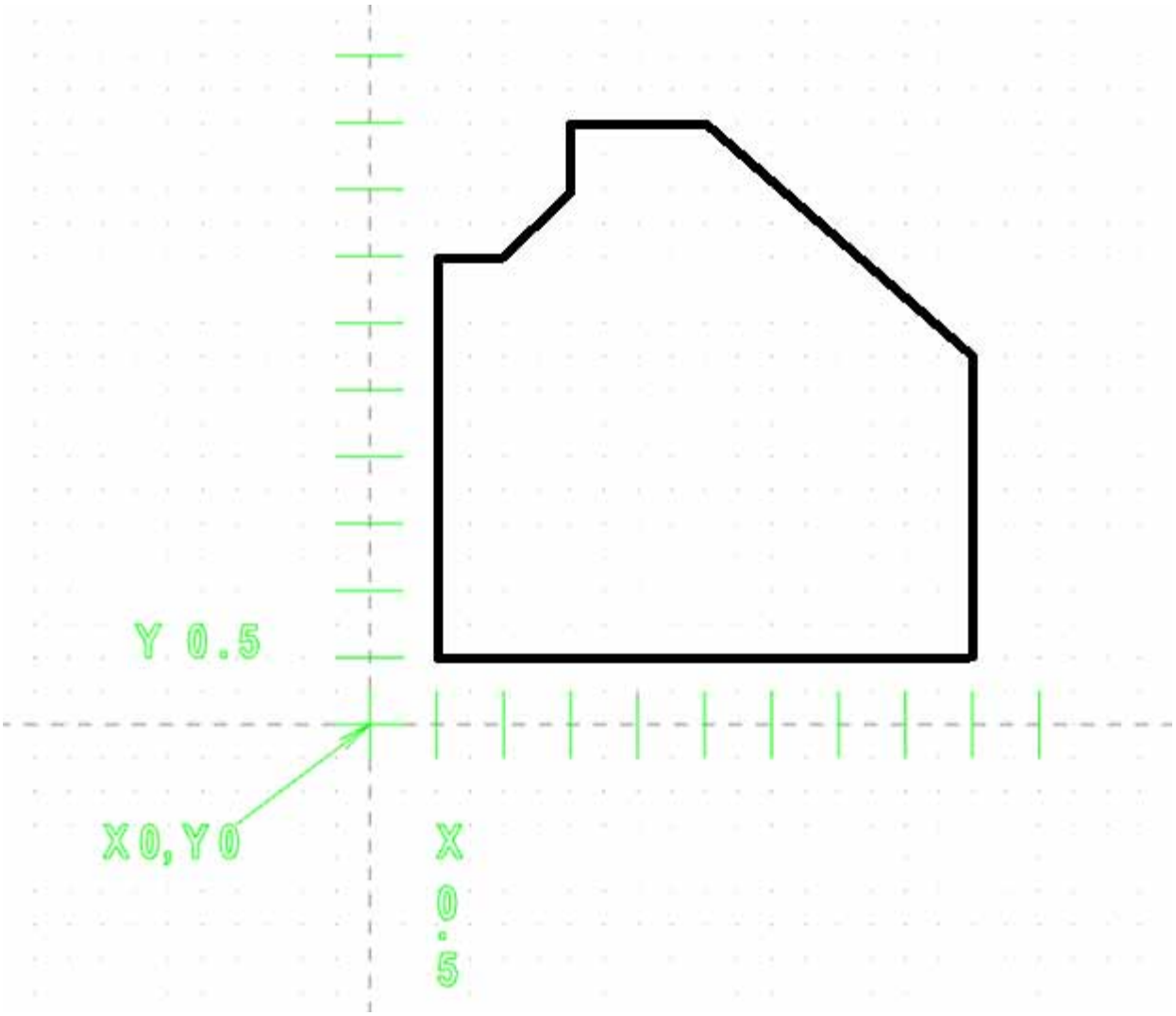

Total question is worth 15 point. Each wrong piece of the answer subtract 1.66 points.

This question has 9 parts

Scoring Example:
15 (all right)
13.328 (1 wrong)
11.662 (2wrong)
9.996 (3 wrong)
8.33 (4 wrong)
6.664 (5 wrong)
4.998 (6 wrong)
3.332 (7 wrong)
1.666 (8 wrong)
0 (9 wrong)

Station 7

Write the appropriate X and Y locations for the points below in both Absolute and Incremental values. Starting at X0, Y0, and moving point to point in numeric order.

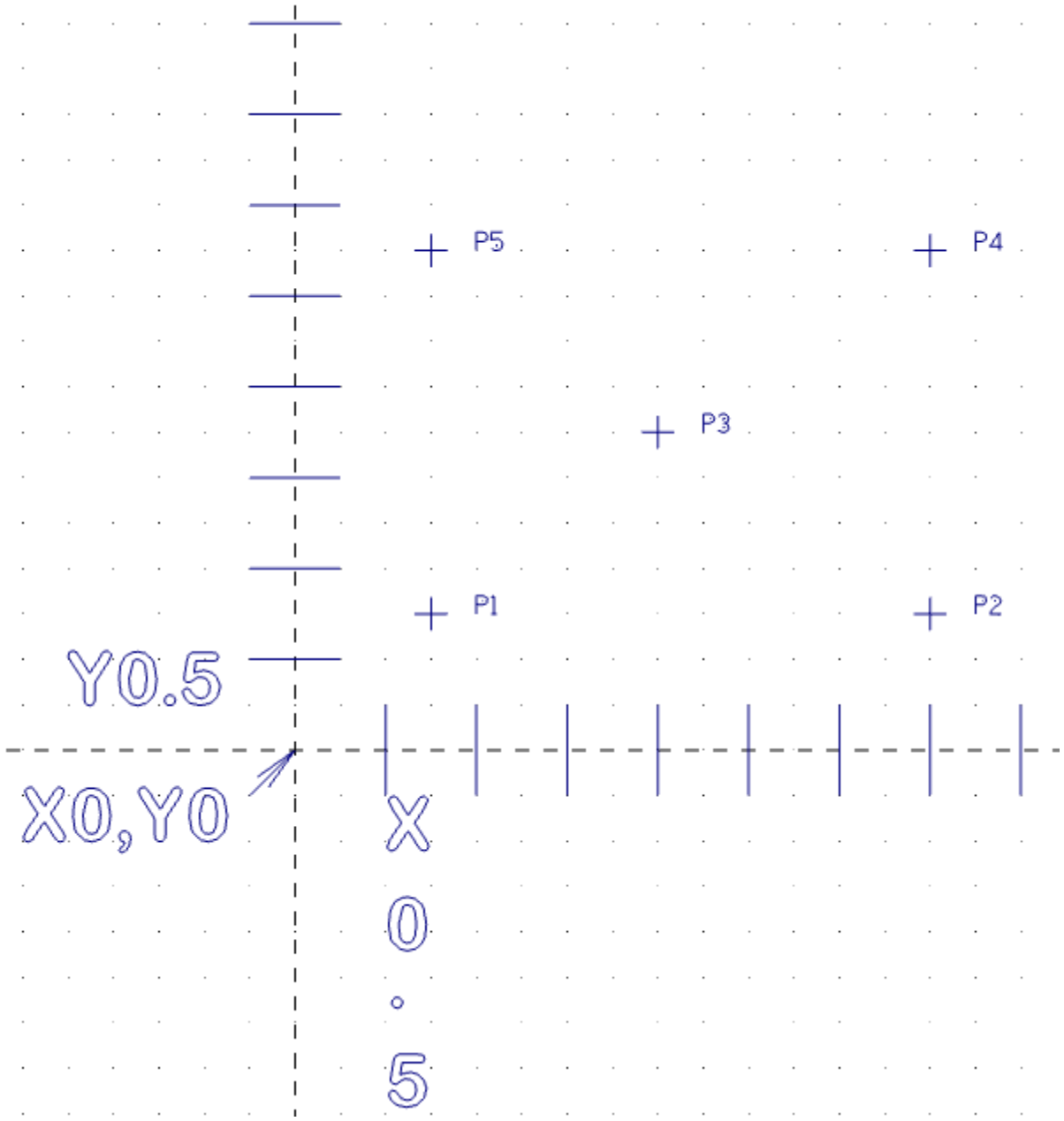

Possible Points: 15

Total:

Team#

Answer to station 7

Absolute positioning	Incremental positioning
P1 X .75, Y.75	P1 X .75, Y.75
P2 X3.50,	P2 X2.75
P3 X2.00, Y1.75	P3 X-1.50, Y1.00
P4 X3.50, Y2.75	P4 X1.50, Y1.00
P5 X.75	P5 X-2.75

Total question is worth 15 point. Each wrong piece of the answer subtract 1.5 points.

This question has 10 parts

Scoring Example:
15 (all right)
13.5 (1 wrong)
12 (2wrong)
10.5 (3 wrong)
9 (4 wrong)
7.5 (5 wrong)
6 (6 wrong)
4.5 (7 wrong)
3 (8 wrong)
1.5 (9 wrong)
0 (10 wrong)

Station 8

Define the following commands:

- G -
- X -
- Y -
- Z -
- R -
- F -
- S -
- H -
- D -
- T -

Possible Points: 15

Total:

Team#

Answers to station 8

- G - Preparatory function
- X - X axis designation (left and right movement)
- Y - Y axis designation (in and out movement)
- Z - Z axis designation (up or down movement)
- R - Radius designation
- F - Feedrate designation
- S - Spindle speed designation
- H - Tool length offset designation
- D - Tool radius offset designation
- T - Tool Designation

Total question is worth 15 point. Each wrong piece of the answer subtract 1.5 points.

This question has 10 parts

Scoring Example:
15 (all right)
13.5 (1 wrong)
12 (2wrong)
10.5 (3 wrong)
9 (4 wrong)
7.5 (5 wrong)
6 (6 wrong)
4.5 (7 wrong)
3 (8 wrong)
1.5 (9 wrong)
0 (10 wrong)

Station 9

Using the print below, what is the diameter of the largest cutter that can be used to finish the geometry.

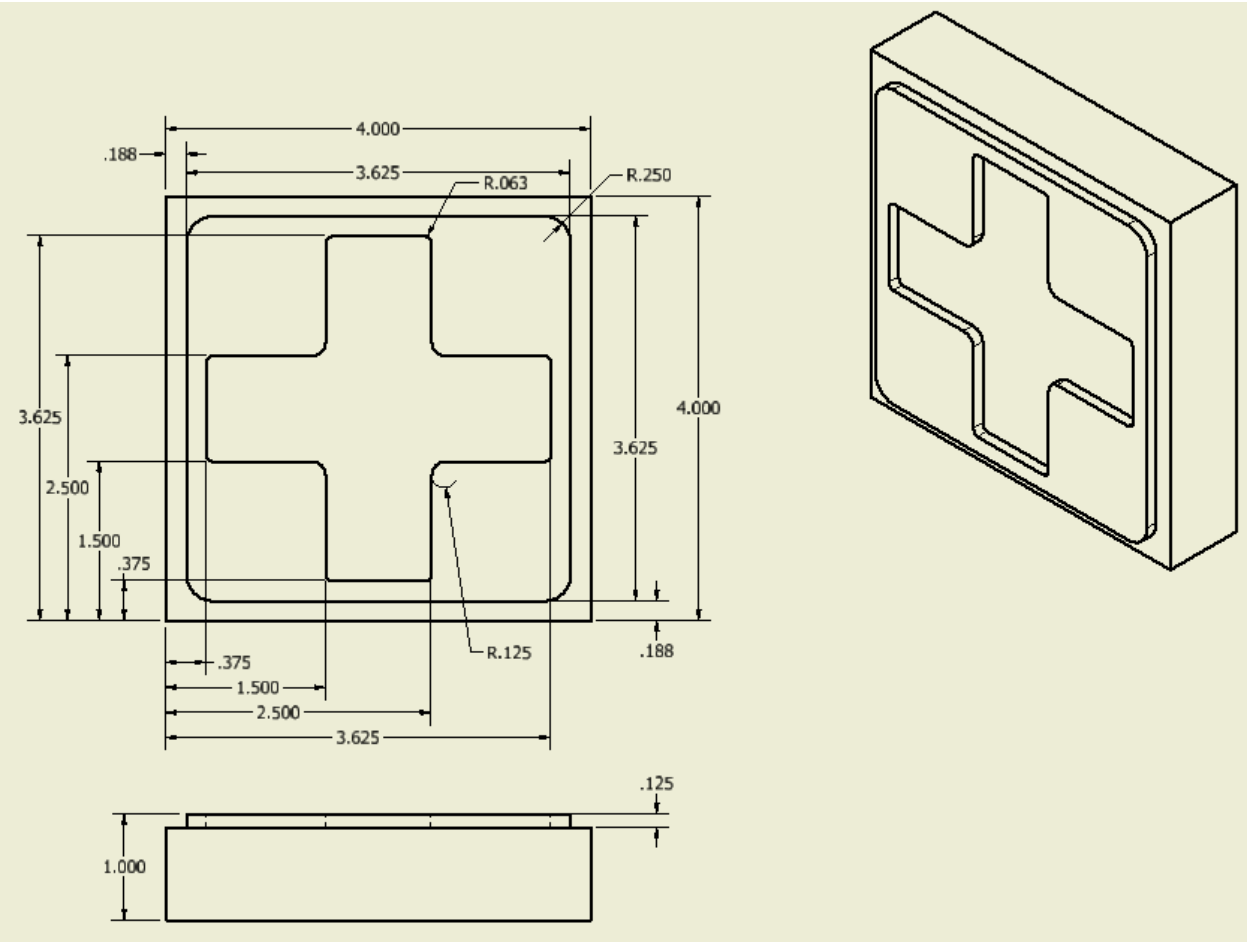

Possible Points: 15

Total:

Team#

Answer to station 9

.125 diameter end mill, or .126 diameter end mill (either or)

Total question is worth 15 point.

This question has 1 parts
Scoring Example:
15 (right)
0 (wrong)

Station 10

Define the geometric dimensioning symbols below

Possible Points: 15

Total:

Team#

Answer to station 10

—	Straightness
▱	Flatness
○	Circularity
∠	Angularity
//	Parallelism

Total question is worth 15 point. Each wrong piece of the answer subtract 3 points.

This question has 5 parts.

Scoring Example:
15 (all right)
12 (1 wrong)
9 (2wrong)
6 (3 wrong)
3 (4 wrong)
0 (5 wrong)

Skills ECO 2015

Using the geometry from the base, insert 1, and insert 2, make the mirror image off all three items. Allow .005 clearance for bosses and pockets per line (.010 for overall dimension).

SkillsUSA
2015 Contest Projects

Basic Health Care Skills

Click the “Print this Section” button above to automatically print the specifications for this contest. Make sure your printer is turned on before pressing the button.

SkillsUSA NATIONAL LEADERSHIP AND SKILLS CONFERENCE

Basic Health Care Skills

Contestant Packet

2015 – National Contest

You will be scored based on the following information.

Subject/criteria	**Point value**
Bed making	100
Vital Signs (T,P,R,BP, Ht. & Wt.)	200
Presentation	200
Job Interview	150
Anatomy & Physiology	200
Written Test	100
Resume	50
Total:	1000

SkillsUSA NATIONAL LEADERSHIP AND SKILLS CONFERENCE

Basic Health Care Skills

Contestant # _____

Making an Unoccupied Bed	Points	Yes	No
1. Ensures correct room is correct. Assemble equipment	5		
2. Wash hands (may verbalize)	5		
3. Linens in correct order on bedside table or chair	5		
4. Bed raised to waist level for back safety.	5		
5. Remove soiled linen (roll sheets toward center and roll down to foot of bed) & place in hamper	5		
6. Unfold bottom sheet with seam toward mattress using flat sheet or fitted sheet. Center fold to center of bed.	5		
7. If fitted sheet: tuck in edges at HOB, side of bed contestant is on and bottom. If flat sheet: lay small hem even to bottom of the bed, tuck larger hem under at the top of the bed, miter the corner and tuck the side of the sheet where the contestant is.	5		
8. Place draw sheet on bed approx. 2 feet from top. Tuck in draw sheet on side of the bed where the contestant is standing.	5		
9. Place top sheet on bed, wrong side up (seam away from pt.) Use center fold to center sheet on bed. Wide hem should be even with edge of mattress.	5		
10. Unfold blanket/bedspread using same technique as top sheet.	5		
11. Tuck the bottom of bedspread and top sheet under mattress at the foot of the bed.	5		
12. Make mitered corner, letting the triangle hang loose.	5		
13. Move to other side of bed.	5		
14. Bottom sheet: Fitted sheet: tuck in top, bottom and remaining side Flat sheet: tuck in bottom sheet at top of bed and miter remaining corner, tuck in remaining side.	5		
15. Pull draw sheet taut and tuck in remaining side	5		
16. Tuck in top sheet & bedspread at bottom and miter corner leaving triangle hanging loose. Smooth out top covers and fold upper hem.	5		
17. Apply pillowcase without brining pillow up to contestant's uniform. Pillow placed at HOB with opening facing away from door.	5		
18. Lower bed to lowest position	5		
19. Wash hands	5		
20. Used correct body mechanics throughout entire procedure.	5		
Total: (100 Possible)			

SkillsUSA NATIONAL LEADERSHIP AND SKILLS CONFERENCE

Basic Health Care Skills

Contestant #: _____

Vital Signs (T, P, R, BP, Ht., Wt.)	Points	Yes	No
1. Assemble equipment.	10		
2. Wash hands	10		
3. Introduce self, ID pt. explain procedure	10		
4. Correctly take oral temp, ensure to ask pt. if eaten, drank or smoked in last 15 mins. Sheath applied & probe is placed under pt. tongue, mouth closed. Remove probe when temp is taken, remove sheath without touching it.	10		
5. Record temp	10		
6. Correctly measure radial pulse. (pt. is in comfortable position, place fingers over radial pulse & count for 1 full minute)	10		
7. While fingers still in place, count respirations for 1 full minute.	10		
8. Record pulse rate +/- 4 BPM of Judge	10		
9. Record respiration rate +/- 2 breaths of Judge.	10		
10. Accurately measure BP (ensure to disinfect earpieces and diaphragm of stethoscope)	10		
11. Record BP in fraction format within +/- 2-mmHg mercury of Judge.	10		
12. Correctly measure pt. weight. (Balance scale prior to pt. stepping on)	10		
13. Assist pt. on and off scale.	10		
14. Record weight within +/- 2 pounds of Judge.	10		
14. Accurately measure pt. height, raise height bar higher than pt. Help pt. back on scale.	10		
15. Instruct pt. to stand erect as possible & look ahead.	10		
16. Move bar down till it touches top of pt. head.	10		
17. Elevate height bar, assist pt. of scale	10		
18. Record pt. ht. within +/- 1 inch of Judge	10		
19. Replace equipment.	10		
20. Wash hands.	10		
Total (200 possible)			

SkillsUSA NATIONAL LEADERSHIP AND SKILLS CONFERENCE

Basic Health Care Skills

Prepared Presentation Contestant #:_____

	8	16	24	32	Row Total
Organization	Audience cannot understand presentation because there is no sequence of information	Information follows a logical sequence, but is <5 or >7 minutes in length	Contestant presents information in a logical and timely sequence which audience can follow	Contestant presents information in interesting, logical and timely (5-7 min) sequence which audience can follow	
Subject Knowledge	Contestant did not prepare a topic that falls under the scope of basic health care skills	Contestant is uncomfortable with information; able to answer only to rudimentary questions	Contestant is a ease with expected answers to all questions, but fails to elaborate	Contestant demonstrates full knowledge (more than required) by answering all questions with explanations and elaboration	
Graphics	Display does not follow rules of contest (30"X30"x30") Tri-fold poster is acceptable (2008=4'x6')	Display is correct size, but contains trade names	Display is correct size with no trade names, but visuals were not prepared by student	Display is correct size, trade names are absent, and contestant prepared own visuals	
Mechanics	Four (4) or more spelling and/or grammatical errors	Three (3) or more spelling and/or grammatical errors	No more than (2) spelling and/or grammatical errors	No misspelling or grammatical errors	
Eye Contact	Contestant reads all the report with no eye contact	Contestant occasionally uses eye contact, but still reads most of the report	Contestant maintains eye contact most of the time but frequently returns to notes	Contestant maintains eye contact with audience, seldom returning to notes	
Elocution (Speaking Style)	Contestant mumbles, incorrectly pronounces terms, and speaks too quietly for audience to hear	Contestant's voice is low, incorrectly pronounces terms. Audience has a difficult time hearing presentation.	Contestant's voice is clear. Pronounces most words correctly. Presentation can be heard by most	Contestant uses clear voice and correct, precise pronunciation of terms. Audience has no problem hearing presentation.	
				Total Points	+4=

SkillsUSA NATIONAL LEADERSHIP AND SKILLS CONFERENCE

Basic Health Care Skills
Job Application

Date:_____ Contestant #:_____
(for official use only)

Position Desired:_____

Education: Highest Level Attained:_____

Major Area of Study:_____

Attendance Record: Check one Excellent _____ Good _____ Fair _____

Are you a U.S. Citizen? _____

Salary Desired: _____

Are you willing to work weekends or holidays? _____

Full time_____ OR Part-time _____

Are you willing to submit to a drug screen today? If not, why not? _____

_____

Emergency Contact: Name:_____ Relationship: _____

Phone Number: _____

---

3 References who are not relatives: Name and phone number

1) _____
2) _____
3) _____

Past Work Experience: Starting with most recent or current job.

Job Title: _____ Length of employment: _____
Beginning salary $_____ Ending salary $_____
May we contact previous employer? _____

Job Title: _____ Length of employment: _____
Beginning salary $_____ Ending salary $_____
May we contact previous employer? _____

Skills (Applicable to Position Desired)

_____

_____

_____

Three (3) qualities you possess that make you an outstanding health care worker:

1) _____
2) _____
3) _____

Do you have any licenses or certifications related to this job?

_____ Expiration Date: _____ Where Obtained: _____

_____ Expiration Date: _____ Where Obtained: _____

Contest question: since you re wearing a scrub uniform today, how would you describe appropriate attire for a real job interview?

_____

_____

_____

Thank you
for your interest
and hard work
with the
Skills USA
Organization!

SkillsUSA NATIONAL LEADERSHIP AND SKILLS CONFERENCE

Basic Health Care Skills

Job Interview Questions Contestant #_____

1) Why do you want to work in health care? (other than, I want to take care of people)

2) Tell me something you feel you need to improve on. (learning needs, bad habits, temptations, etc)

3) You enter a resident's room and your co-worker is looking through the resident's handbag. She states she is looking for a piece of gum. How should you approach the situation?

4) Tell me your strengths.

SkillsUSA NATIONAL LEADERSHIP AND SKILLS CONFERENCE

Basic Health Care Skills

Job Application/Interview Scoring Sheet Contestant #

Job Application:

1). Handwriting legible/Neat/Black or Blue Ink	10	_____
2). Grammatically correct	10	_____
3). Followed All Directions	10	_____
4). Application Complete	10	_____
5). Answered last "contest question" correctly	10	_____

Interview:

1). Introduces self at start/ thanks interviewer at end	20	_____
2). Appearance/posture/eye contact/mannerisms	20	_____
3). Listens closely to questions/speaks clearly	20	_____
4). Appropriateness of answers	20	_____
5). Overall impression with answers	20	_____

Overall Total (Possible 150): _____

Resume Grading Rubric

Contestant: _____ **Instructor:** _____

Skill	Outstanding	Good	Average	Unsatisfactory	Total
PRESENTATION/ FORMAT	• Typed or computer generated • Balanced margins with eye appeal • Format highlights strengths and information • Appropriate fonts and point size used with variety	• Typed or computer generated • Balanced margins • Format identifies strengths and information • Appropriate fonts and point size used	• Typed or computer generated • Somewhat balanced margins • Format identifies strengths and information • No variation in fonts and/or point size	• Typed or computer generated • Unbalanced margins • Format detracts from strengths and information • Fonts distract from readability	
Ranking Points	**10**	**8**	**7**	**6**	
JOB-SPECIFIC / VOLUNTEER INFORMATION	• All action phrases used to describe duties and skills • Information demonstrates ability to perform the job • Professional terminology used when describing skills	• 1-2 duties/skills lack action phrases • Information demonstrates ability to perform the job • Some professional terminology used when describing skills	• 3-4 duties/skills lack action phrases • Some information demonstrates ability to perform the job	• 5-6 duties/skills lack action phrases • Information does not clearly demonstrate ability to perform the job	
Ranking Points	**15**	**12**	**11**	**10**	
RESUME CONTENT	• Heading, objective, skills, experience, and education covered in detail • Extra information given to enhance resume	• Heading, objective, skills, experience, and education covered in some detail • Extra information given to enhance resume	• Heading, objective, skills, experience and education covered with little detail • Minimal extra information given to enhance resume	• Missing one of the following: heading, objective, experience, or education • No extra information given to enhance resume	
Ranking Points	**15**	**12**	**11**	**10**	
SPELLING & GRAMMAR	• No spelling errors • No grammar errors	• 1-2 spelling errors • 1-2 grammar errors	• 3-4 spelling errors • 3-4 grammar errors	• 5-6 spelling errors • 5-6 grammar errors	
Ranking Points	**10**	**8**	**6**	**4**	
					TOTAL SCORE:

Comments:

Anatomy & Physiology Structure Exam

Contestant #: _____

1.	26.
2.	27.
3.	28
4.	29.
5.	30
6.	31.
7.	32.
8.	33.
9.	34.
10.	35.
11.	36.
12.	37.
13.	38.
14.	39.
15.	40.
16.	41.
17.	42.
18.	43.
19.	44.
20.	45.
21.	46.
22.	47.
23.	48.
24.	49.
25.	50.

Anatomy & Physiology Exam Answer Key.

1. epidermis	26. appendix
2. dermis	27. pharynx
3. subcutaneous	28. esophagus
4. right kidney	29. stomach
5. bladder	30 large intestine
6. urethra	31. small intestine
7. left kidney	32. rectum
8. ureter	33. anus
9. atlas	34. hypothalamus
10. axis	35. pineal gland
11. cervical	36. pituitary gland
12. thoracic	37. thyroid gland
13. lumbar	38. thymus gland
14. sacrum	39. adrenal gland
15. coccyx	40. pancreas
16. clavicle	41. ovary
17. radius	42. testes
18. humerus	43. cardiac muscle
19. ulna	44. skeletal muscle
20. parietal lobe	45. smooth
21. occipital lobe	46. trapezius
22. cerebellum	47. latissimus dorsi
23. frontal lobe	48. sternocleidomastoid
24. temporal lobe	49. deltoid
25. liver	50. triceps

Resume Grading Rubric

Contestant: _____ **Instructor:** _____

Skill	Outstanding	Good	Average	Unsatisfactory	Total
PRESENTATION/ FORMAT	▪ Typed or computer generated ▪ Balanced margins with eye appeal ▪ Format highlights strengths and information ▪ Appropriate fonts and point size used with variety	▪ Typed or computer generated ▪ Balanced margins ▪ Format identifies strengths and information ▪ Appropriate fonts and point size used	▪ Typed or computer generated ▪ Somewhat balanced margins ▪ Format identifies strengths and information ▪ No variation in fonts and/or point size	▪ Typed or computer generated ▪ Unbalanced margins ▪ Format detracts from strengths and information ▪ Fonts distract from readability	
Ranking Points	**10**	**8**	**7**	**6**	
JOB-SPECIFIC / VOLUNTEER INFORMATION	▪ All action phrases used to describe duties and skills ▪ Information demonstrates ability to perform the job ▪ Professional terminology used when describing skills	▪ 1-2 duties/skills lack action phrases ▪ Information demonstrates ability to perform the job ▪ Some professional terminology used when describing skills	▪ 3-4 duties/skills lack action phrases ▪ Some information demonstrates ability to perform the job	▪ 5-6 duties/skills lack action phrases ▪ Information does not clearly demonstrate ability to perform the job	
Ranking Points	**15**	**12**	**11**	**10**	
RESUME CONTENT	▪ Heading, objective, skills, experience, and education covered in detail ▪ Extra information given to enhance resume	▪ Heading, objective, skills, experience, and education covered in some detail ▪ Extra information given to enhance resume	▪ Heading, objective, skills, experience, and education covered with little detail ▪ Minimal extra information given to enhance resume	▪ Missing one of the following: heading, objective, experience, or education ▪ No extra information given to enhance resume	
Ranking Points	**15**	**12**	**11**	**10**	
SPELLING & GRAMMAR	▪ No spelling errors ▪ No grammar errors	▪ 1-2 spelling errors ▪ 1-2 grammar errors	▪ 3-4 spelling errors ▪ 3-4 grammar errors	▪ 5-6 spelling errors ▪ 5-6 grammar errors	
Ranking Points	**10**	**8**	**6**	**4**	
					TOTAL SCORE:

Comments:

FIGURE **1–1 LAYERS OF THE SKIN**

The figure below illustrates the skin (integumentary) system, the largest organ of the body, on a structural basis comprised of three parts. The figure below depicts a longitudinal section of the skin. The skin layers are bracketed on the right of the figure. Identify these layers by name and color each of the structures below in a different color.

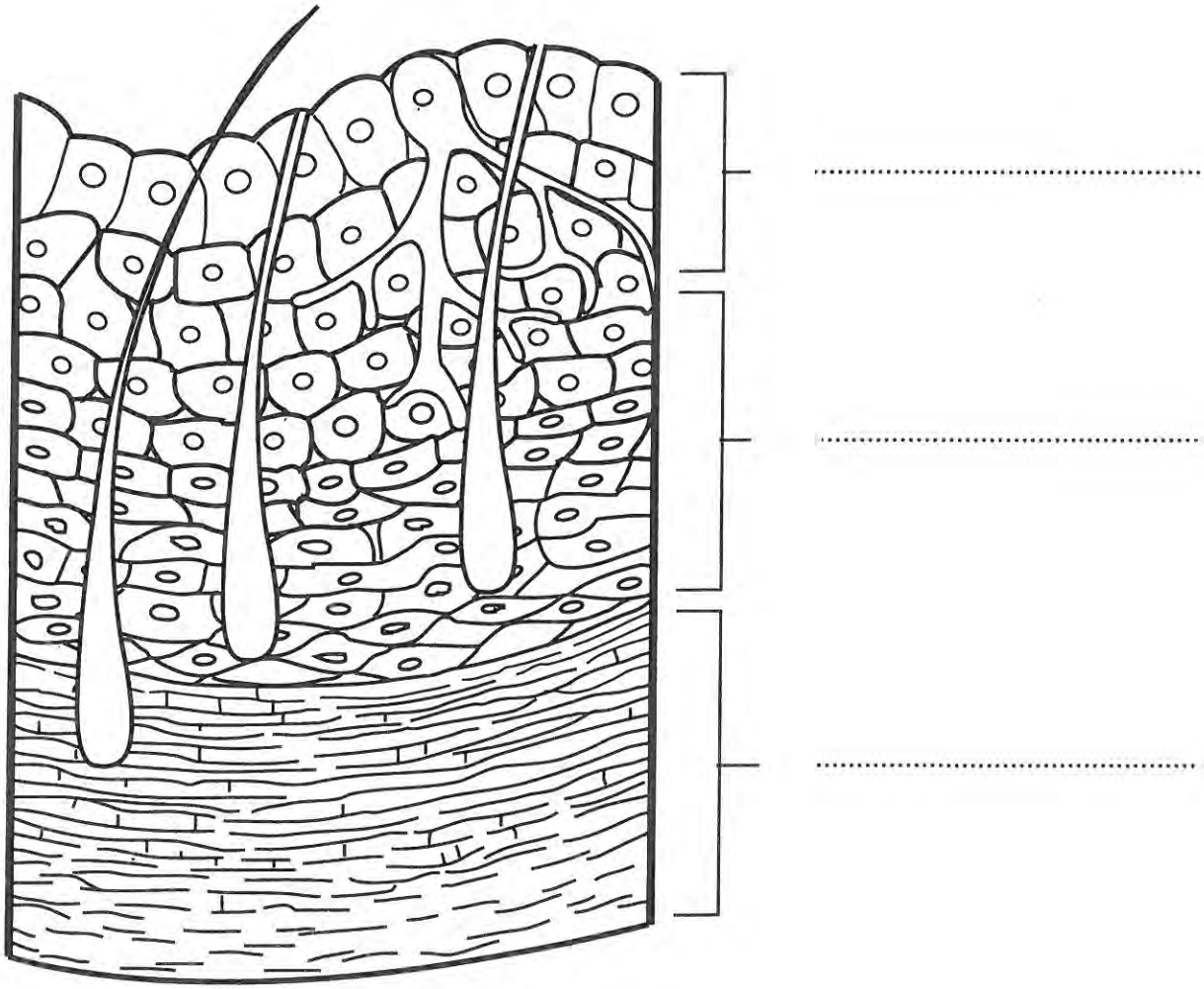

© 2004, Mosby, Inc. All rights reserved.

FIGURE **2–6** **VERTEBRAL SECTIONS (Cervical, Thoracic, Lumbar, and Sacral)**
The figure below depicts a lateral view of the spine. The sections of the spine are indicated by brackets. Identify the sections by name and color each structure identified with a different color. Numbers 1, 2, and 3 are specifically named vertebral bodies. Identify them individually.

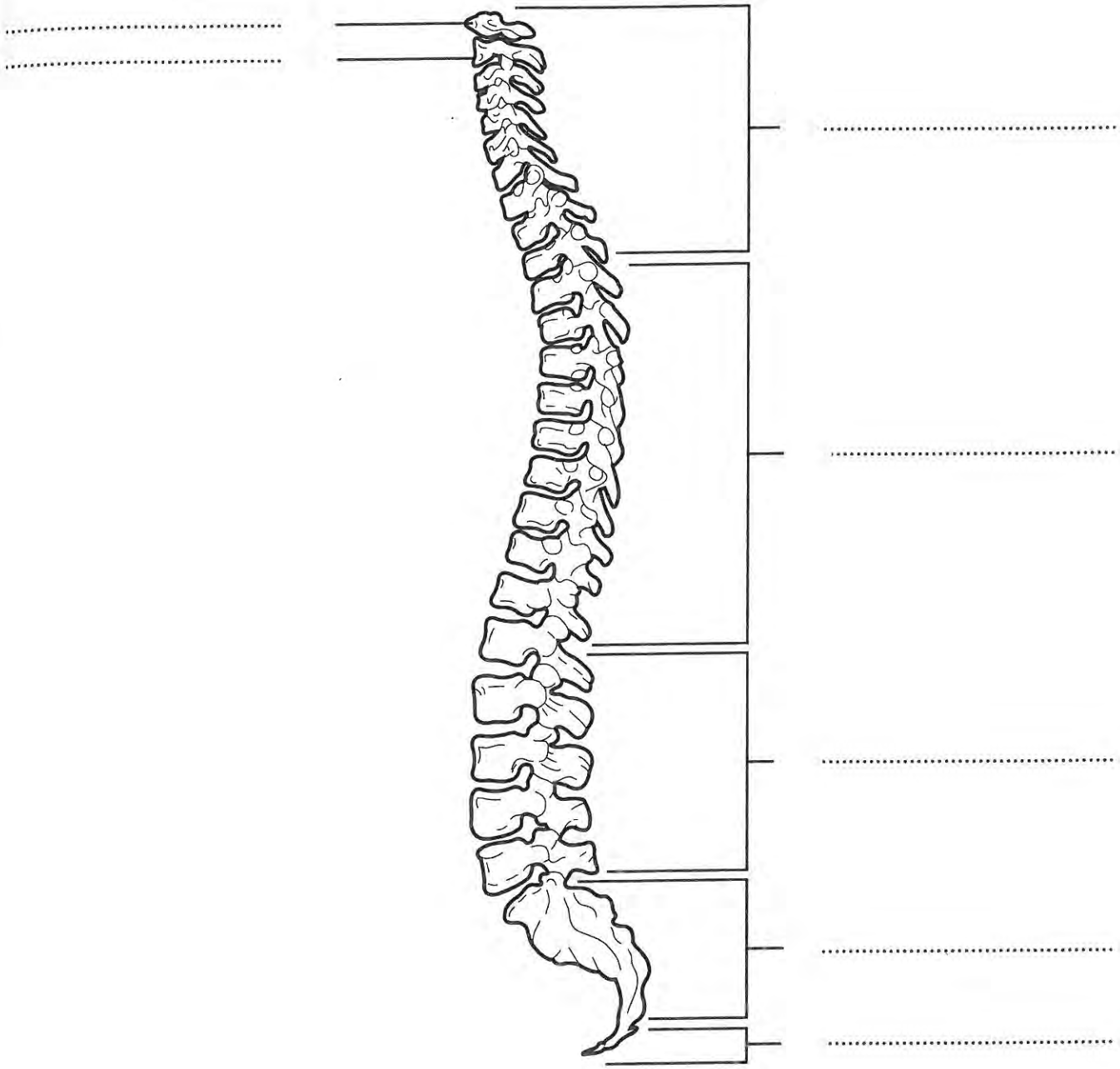

© 2004, Mosby, Inc. All rights reserved.

FIGURE **2–9** **PECTORAL GIRDLE (Clavicle and Scapula) AND UPPER LIMB**
Below is a diagram of an entire upper limb. Identify each structure indicated by the lines, and select a different color for each structure.

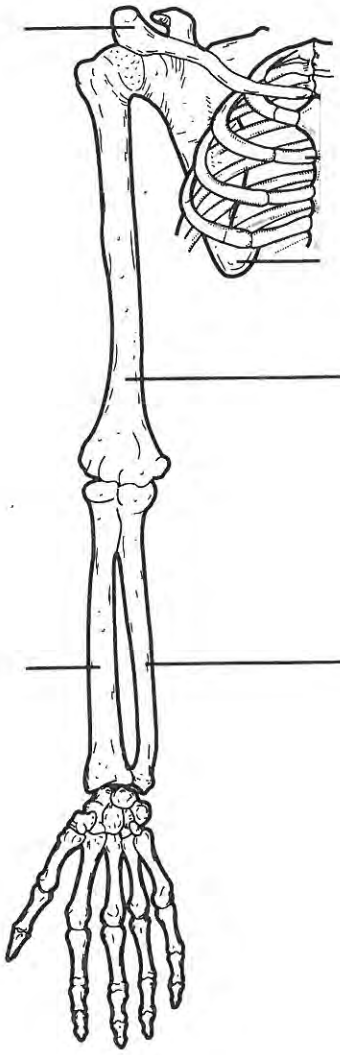

© 2004, Mosby, Inc. All rights reserved.

RE 3–1 TYPES OF MUSCLES

figure below illustrates the three basic types of muscles within the muscular system. Identify the particular of muscle labeled with a blank line and color each structure within the muscle with a different color.

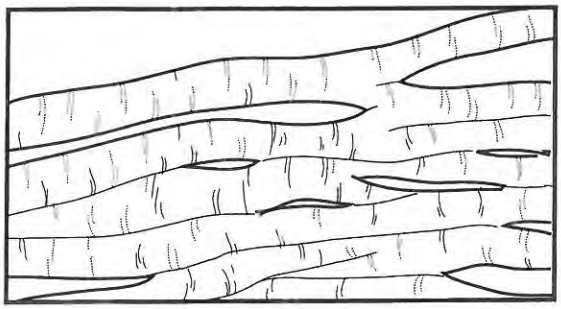

_____ .....

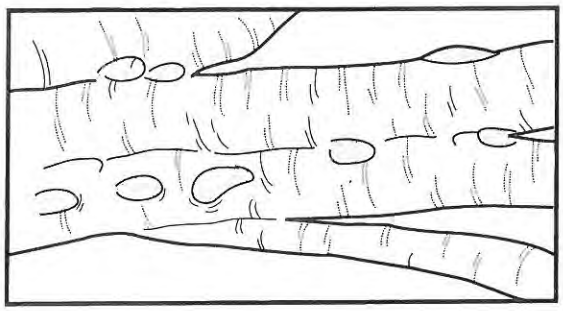

_____ .....

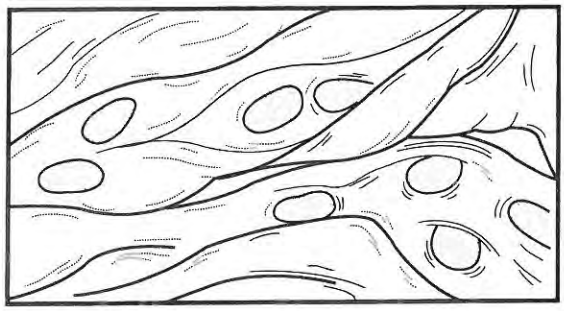

_____ .....

© 2004, Mosby, Inc. All rights reserved.

UNIT 4 The Nervous System

FIGURE **4–2 BRAIN (External Anatomy)**
The figure below illustrates the external anatomy of the brain, a part of the central nervous system. Identify the structures that are indicated with blank lines, and color each structure with a different color.

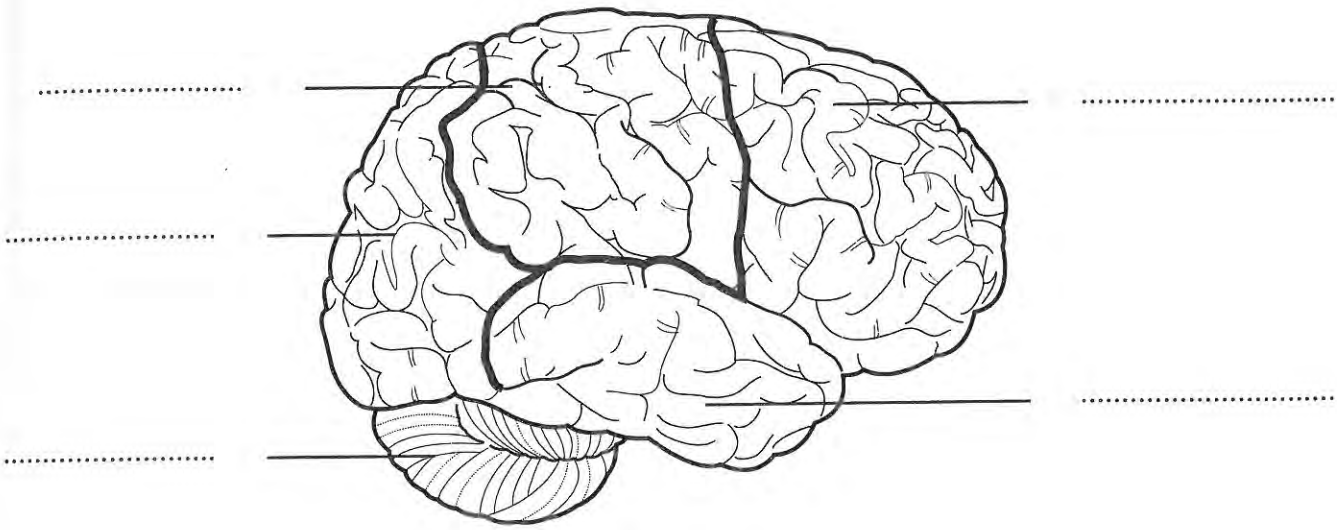

FIGURE 15–1 **BASIC URINARY SYSTEM STRUCTURE**
The urinary system eliminates liquid wastes from the body. Each of the body's cells discharge wastes into the bloodstream, which carries these wastes to the kidneys located on either side of the spine in the lumbar region. The picture below illustrates the entire urinary system: kidneys, ureters, bladder, and urethra. Fill in the blank lines and color each structure identified.

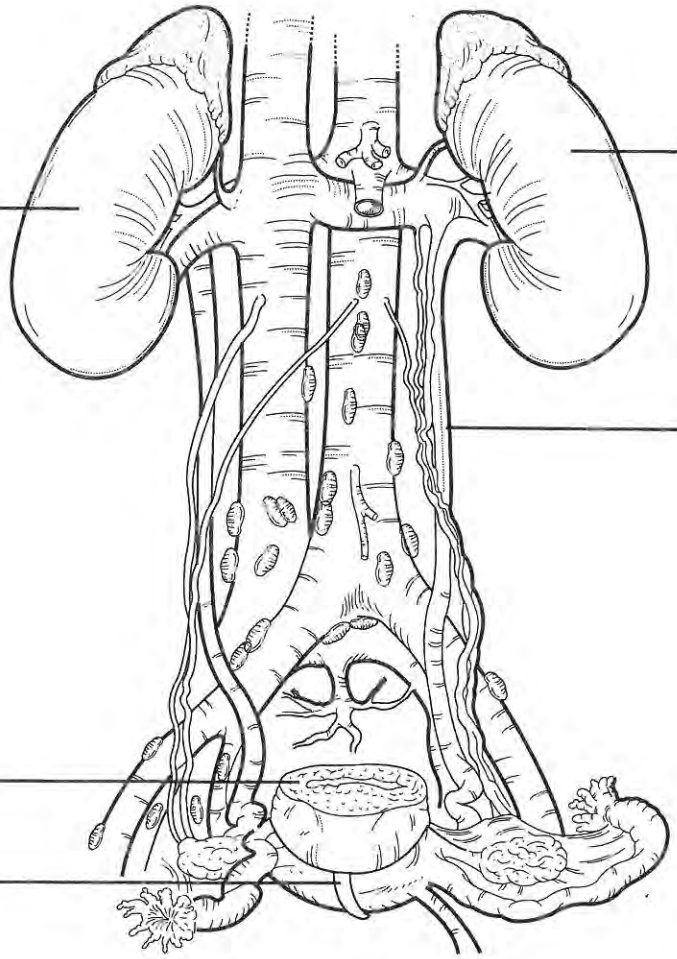

© 2004, Mosby, Inc. All rights reserved.

UNIT 13 The Endocrine System

FIGURE **13–1 TYPES OF ENDOCRINE GLANDS**
The figure below is an illustration of the various endocrine glands of the body. These glands secrete hormones into the bloodstream that travel throughout the body. These secretions affect organs as well as other endocrine glands to control specific actions within the body. Identify each gland indicated by the blank lines. Color each structure a different color.

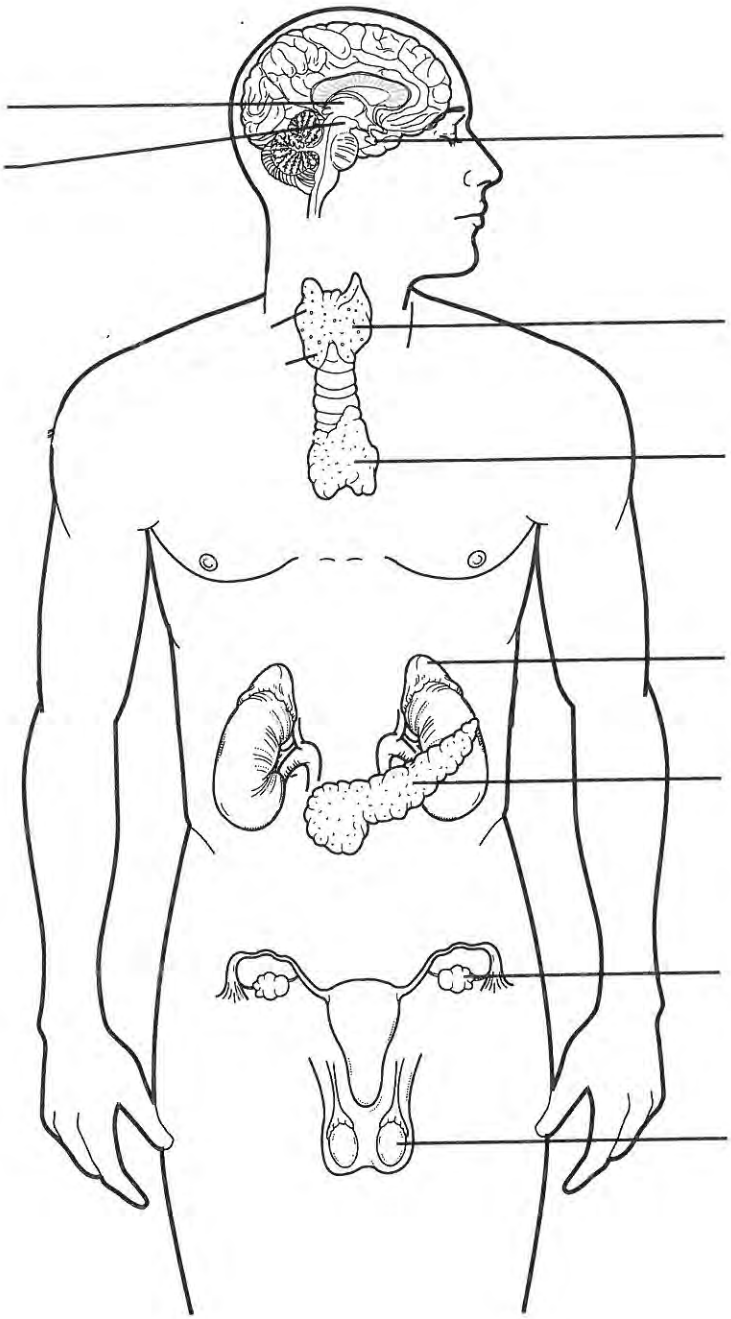

URE **3–4 MUSCLES OF THE TRUNK (Posterior View)**

e figure below illustrates the muscles of the trunk from the posterior view. Identify the muscles that have en marked with a blank line. Then select a color for each identified muscle and color that particular muscle.

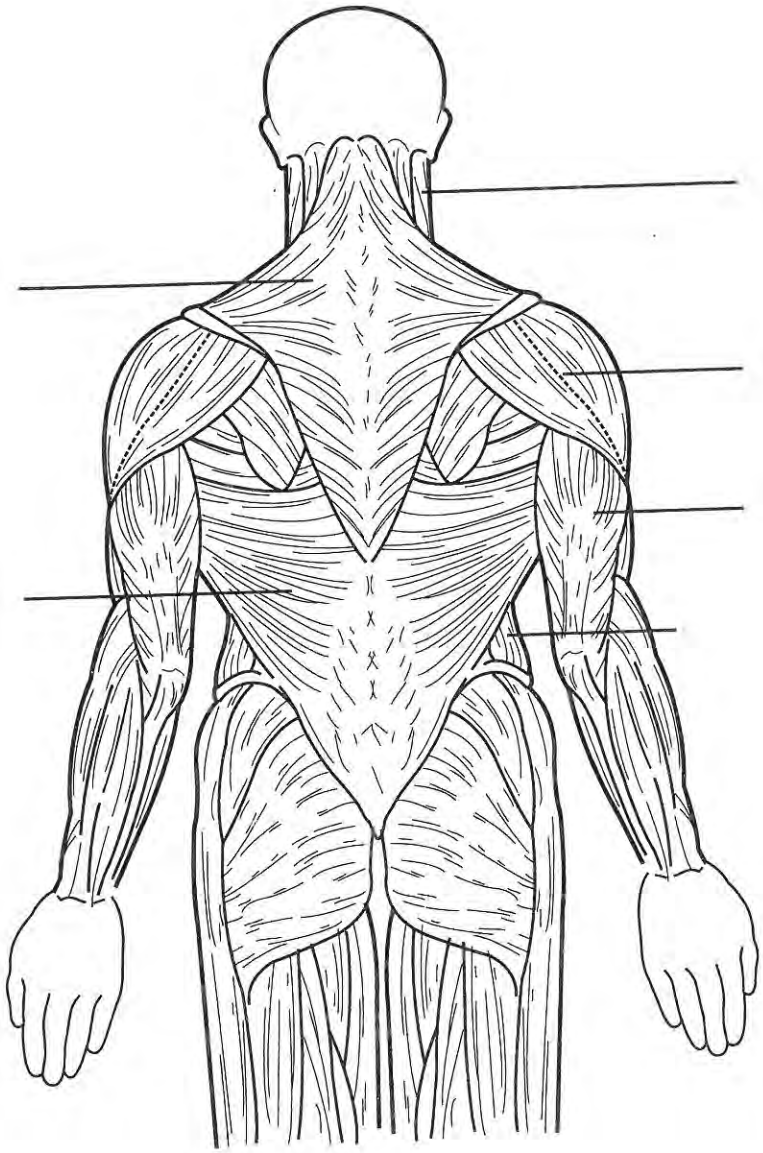

© 2004, Mosby, Inc. All rights reserved.

UNIT 14 The Digestive System

IGURE 14–1 BASIC DIGESTIVE SYSTEM STRUCTURE

'he digestive system processes food so that it can be absorbed and used by the body's cells. The structures dentified below are responsible for food ingestion, digestion, absorption, and elimination of undigested remains rom the body. Select different colors for the organs identified by the blank lines. Color the structures and fill in he blanks with the correct names.

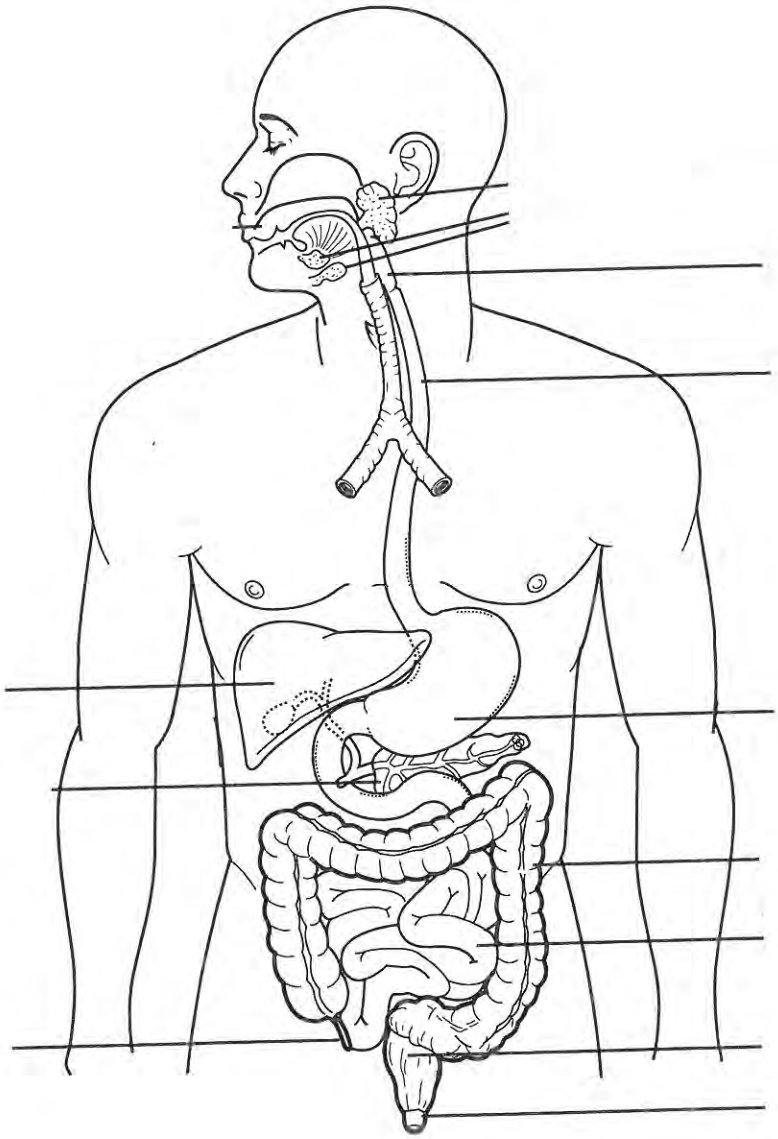

© 2004, Mosby, Inc. All rights reserved.

SkillsUSA
2015 Contest Projects

Building Maintenance

Click the “Print this Section” button above to automatically print the specifications for this contest. Make sure your printer is turned on before pressing the button.

CONTEST #1
LIQUID
MEASUREMENT

CONTESTANT NUMBER

ITEMS EVALUATED	PTS. POSS.								
1. Read Material Safety Data Sheets, Special Precautions and First Aid Instructions.	0-10								
2. USE PERSONAL SAFETY EQUIPMENT.	0-40								
3. READ DIRECTIONS	0-20								
4. OBTAIN AND USE CORRECT MEASURING DEVICES / CONTAINERS.	0-30								
5. MEASUREMENT AND MIXING OF SOLUTION #1	0-40								
6. MEASUREMENT AND MIXING OF SOLUTION #2	0-40								
7. CLEANING OF TESTING AREA.	0-20								

GRAND TOTAL POINTS (200 POSSIBLE)								
CLOTHING PENALTY (-0TO5%)								
GRAND TOTAL (200 POSSIBLE)								

CONTESTANT REMARKS ARE ON THE BACK

#2 STRIPPING AND FINISHING FLOORS

ITEMS EVALUATED	PTS. POSS.	CONTESTANT #							
Set up appropriate sign.	0-10								
Select properly coded mop for applying stripper. (blue head)	0-10								
Select and mix proper solution from given products.	0-10								
~~Put stripper boots on.~~	0-10	10	10	10	10	10	10	10	10
Observe sequence of task.	0-10								
A. Mop floor with stripper	0-10								
B. Explain to judge that you would normally allow the stripper to set for 10-15 min.	0-10								
C. Pick the correct pad (black). Install the pad on the machine and scrub the floor in 2 directions.	0-10								
D. Pick up solution with wet/dry vac.	0-10								
E. Mop on clear hot rinse with red handled - red mop.	0-10								
F. Pick up hot water rinse with wet/dry vac.	0-10								
G. Apply cold water rinse with vinegar with red mop - white handle.	0-10								
H. Pick up excess water with wringed out mop	0-10								
I. Check mop code (red/white handle)	0-10								
J. Set up blower for drying floor.	0-10								
K. Mopping technique	0-10								
Select proper product from several choices to apply finish	0-10								
Select proper mop and bucket (blue handle)	0-10								
Apply finish observe proper technique	0-20								
TOTAL POINTS	200								
CLOTHING PENALTY	(max 5%)								
GRAND TOTAL POINTS	200								
CONTESTANT #									

#3 BONNET SCRUBBING AND EXTRACTING CARPETS

CONTESTANT#

ITEMS EVALUATED		PTS. POSS.							
A.	SET UP APPROPRIATE SIGNS.	0-10							
B.	SELECT SPOT REMOVER	0-5							
C.	SPRAY ON SPOT	0-5							
D.	BLOT THE STAIN WITH A RAG AND STATE THAT YOU DO NOT RUB THE STAIN BECAUSE IT WILL SPREAD.	0-20							
E.	SELECT TRAFFIC LANE CLEANER	0-20							
F.	SPRAY TRAFFIC LANES	0-20							
G.	SELECT FOAM CARPET SHAMPOO FOR BONNET	0-20							
H.	MIX SOLUTION AND SOAK BONNET	0-20							
I.	WRING OUT BONNET AND PLACE ON FLOOR	0-20							
J.	PLACE MACHINE OVER BONNET AND SCRUB CARPET IN A BACK AND FORTH MOTION.	0-20							
K.	SELECT SOLUTION FOR CARPET EXTRACTION AND MIX ONE GALLON IN MACHINE.	0-20							
L.	EXTRACT FLOOR, RATE SPEED AND PROCESS	0-20							
SUB TOTAL POINTS		(200 POSS.)							
CLOTHING PENALTY		(-0 TO 5%)							
GRAND TOTAL PTS.		(200 POSS.)							

CONTESTANT REMARKS ARE ON THE BACK

OFFICE CLEANING

	Contest #4	**CONTESTANT # :**							
		Points							
		Possible							
A.	**Safety Equipment**								
	Rubber Gloves	5							
	Safety Glasses	5							
B.	**Wall / Blinds - Dust**								
	Let down blind	0-10							
	Choose correct tool	0-10							
	Clean blind	0-10							
	Dust picture and chair	0-10							
	Dust window frame	0-10							
C.	**Clean Computer and Desk**								
	Select proper cleansers	0-10							
	Wash monitor glass	0-10							
	Dust desk & rest of computer	0-10							
D.	**Wash Wall**								
	Choose general purpose cleaner	0-10							
	Use rag and cleaner to wash wall	0-10							
E.	**Wash Window**								
	Select proper cleaner	0-10							
	Select proper tools	0-10							
	Wash window properly	0-10							
F.	**Dust Mop Floor**								
	Select proper equipment	0-10							
	Dust mop floor	0-10							
	Pick up debris	0-10							
G.	**Sweep Carpet**								
	Police area for obstructions	0-10							
	Select proper equipment	0-10							
	Sweep carpet	0-10							
	SUB-TOTAL POINTS	**200 POSS.**							
	CLOTHING PENALTY	**5%**							
	GRAND TOTAL POINTS	**200 POSS.**							
	CONTESTANT #								

	CONTEST #5 - RESTROOM MAINTENANCE									
	CONTESTANT #									
		Points Possible:								
	Skill Evaluated:									
1	Dust off lights, vents, fixtures, wall, floor, and empty waste can	0-20								
2	Flush toilet, add proper cleaner to soak	0-20								
3	Spray/soak all surfaces with disinfectant cleaner (sink, counters, urinal)	0-20								
4	Clean Mirrors, walls/windows with glass cleaner	0-20								
5	Clean toilet interior surfaces with toilet bowl cleaner under rim, bowl, down to waste exit pipe, leave seat up.	0-20								
6	With clean cloth clean toilet exterior, under seat, top of bowl, top of seat, back of bowl, outside of bowl.	0-20								
7	With clean cloth, clean all handles of sink, toilet, urinal, doors, etc., with disinfectant	0-20								
8	Clean floor and wall baseboard from back of the room toward door/exit with disinfectant and rinse.	0-20								
9	Fill dispensers	0-20								
10	Spot clean waste can and replace waste can liner. Clean and return tools to storage area.	0-20								
	Subtotal Points	200								
	Clothing Penalty (5% of score)									
	TOTAL POINTS EARNED	200								
	CONTESTANT #									

SkillsUSA
2015 Contest Projects

Cabinetmaking

Click the “Print this Section” button above to automatically print the specifications for this contest. Make sure your printer is turned on before pressing the button.

CONTESTANT#

_____

CONTRIBUTING AWI MEMBER COMPANIES:

ALLEN MILLWORK - WICHITA, KS
FREMONT INTERIORS, INC. - CARMEL, IN
OHIO VALLEY DOOR CO. - NEW ALBANY, IN
ROWLAND WOODWORKING, INC. - HIGH POINT, NC
TECHNIQUE MANUFACTURING, INC. - HUTCHINSON, KS
VOLPE MILLWORK, INC. - CLEVELAND, OH
LOUISVILLE LUMBER AND MILLWORK - LOUISVILLE, KY
COHEN ARCHITECTURAL WOODWORKING - ST. JAMES, MO

THE FOLLOWING COMPANIES PROVIDED SERVICES, EQUIPMENT, AND PRODUCTS FOR THIS CONTEST:

SAW STOP
RICHELIEU - INDIANAPOLIS, IN and HIGH POINT, NC
FLEXIBLE MATERIALS - JEFFERSONVILLE, IN
BLUM - KANSAS CITY, KS
SHIELS LUMBER - CINCINNATI, OH
AMERICAN PACKAGING CORP.
DEWALT POWER TOOLS
IRWIN INDUSTRIAL TOOLS
WOODWORK CAREER ALLIANCE OF NORTH AMERICA - www.woodworkcareer.org
HOOD DISTRIBUTION/McEWEN GROUP
OLON INDUSTRIES - WASHINGTON, IN
HAFELE - HIGH POINT, NC
EDWARD B. MUELLER - CINCINNATI, OH
STILES MACHINERY - GRAND RAPIDS, MI
STAR MOULING & TRIM COMPANY - BEDFORD PARK, IL

2015 SkillsUSA NLSC		
PROJECT ACCENT TABLE		
DRAWN BY: AJA	DATE: JUNE 2015	SCALE: N/A
NOTES		PAGE COVER

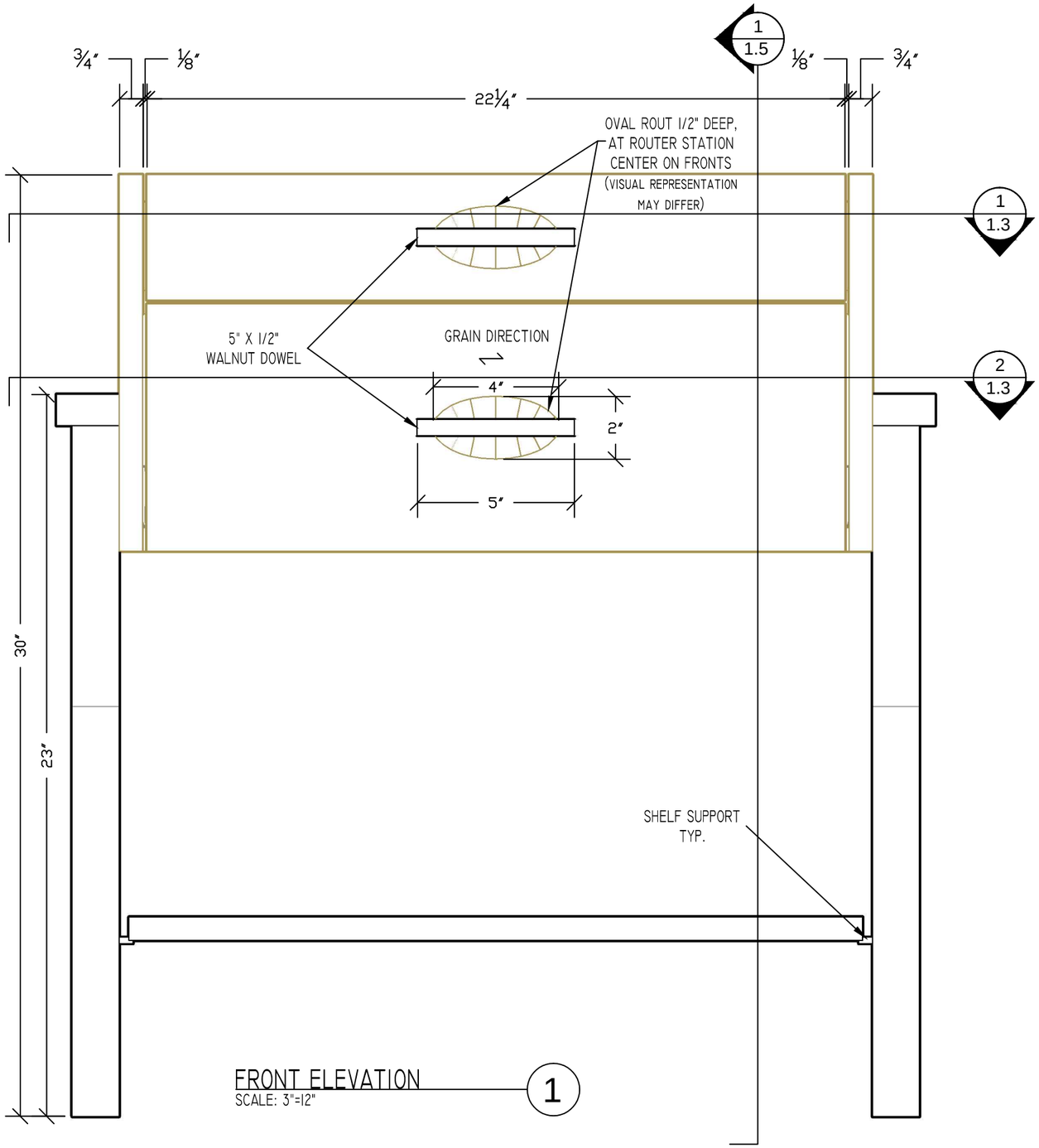

FRONT ELEVATION 1
SCALE: 3"=12"

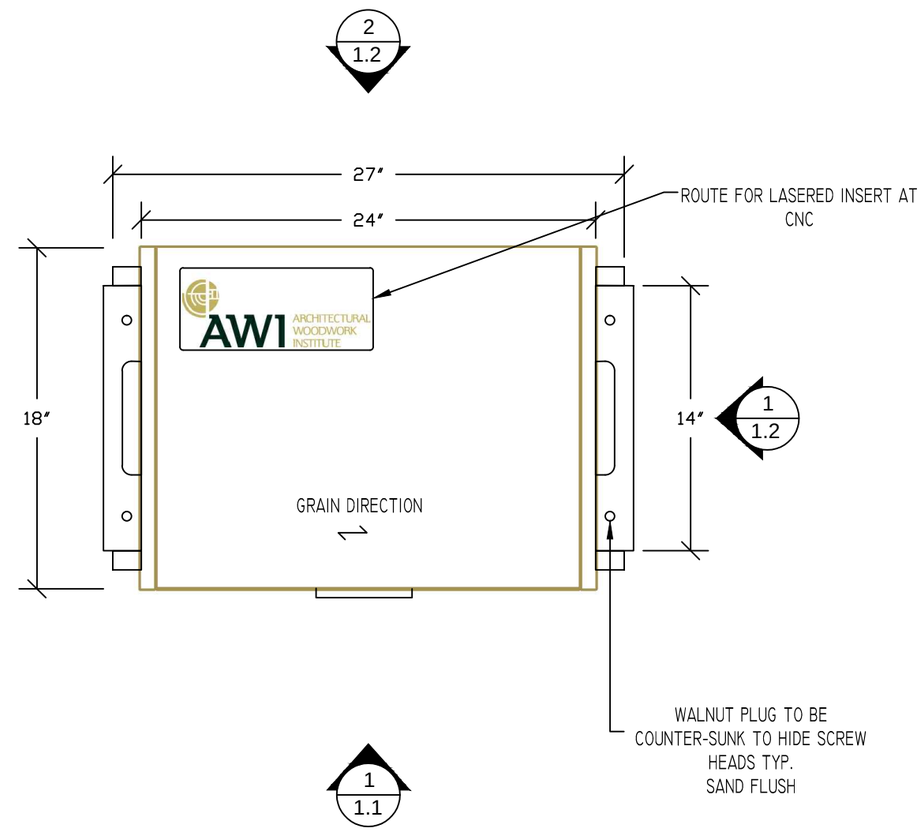

PLAN VIEW
SCALE: 1-1/2"=12"

2015 SkillsUSA NLSC		
PROJECT ACCENT TABLE		
DRAWN BY: AJA	DATE: JUNE 2015	SCALE: N/A
NOTES		PAGE 1.1

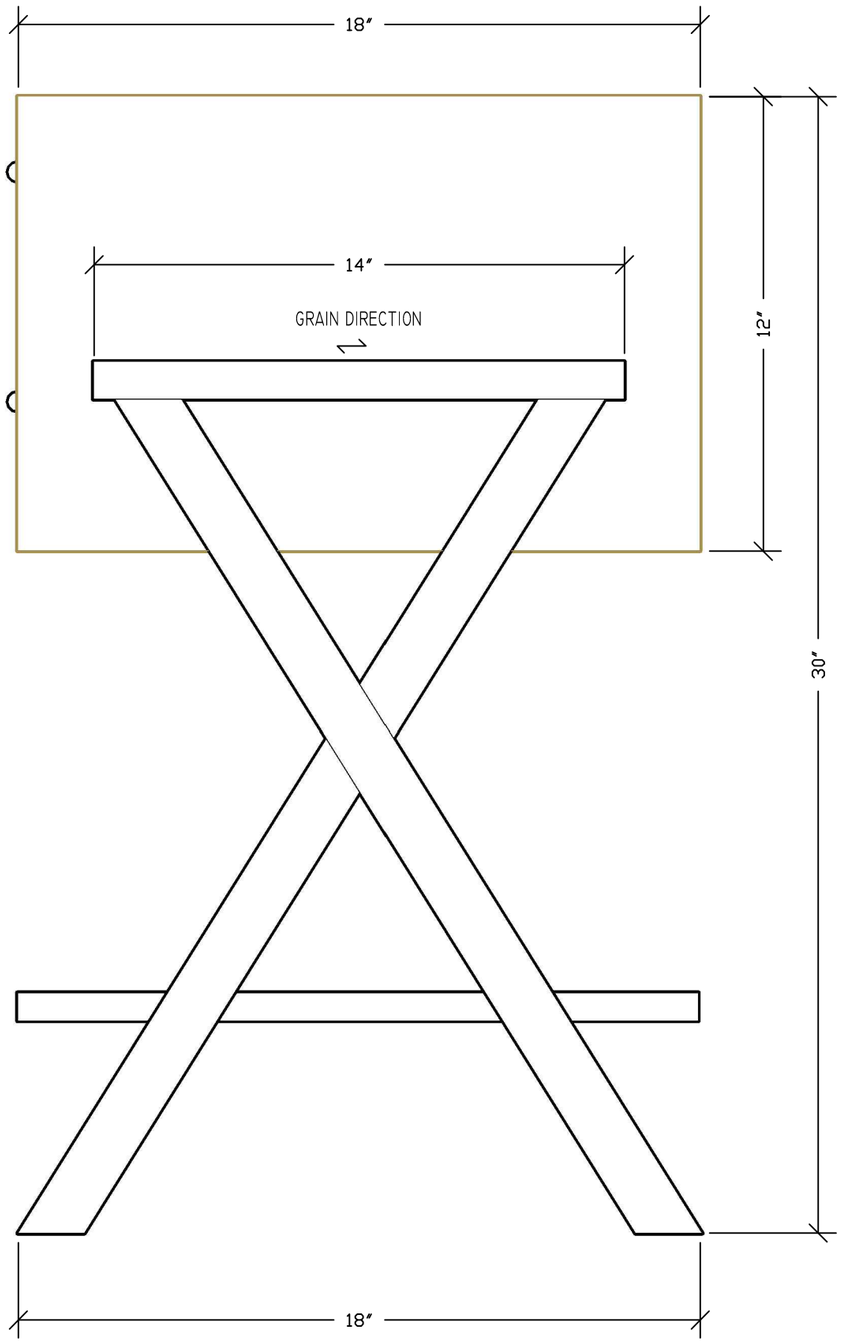

SIDE ELEVATION 1
SCALE: 1-1/2"=12"

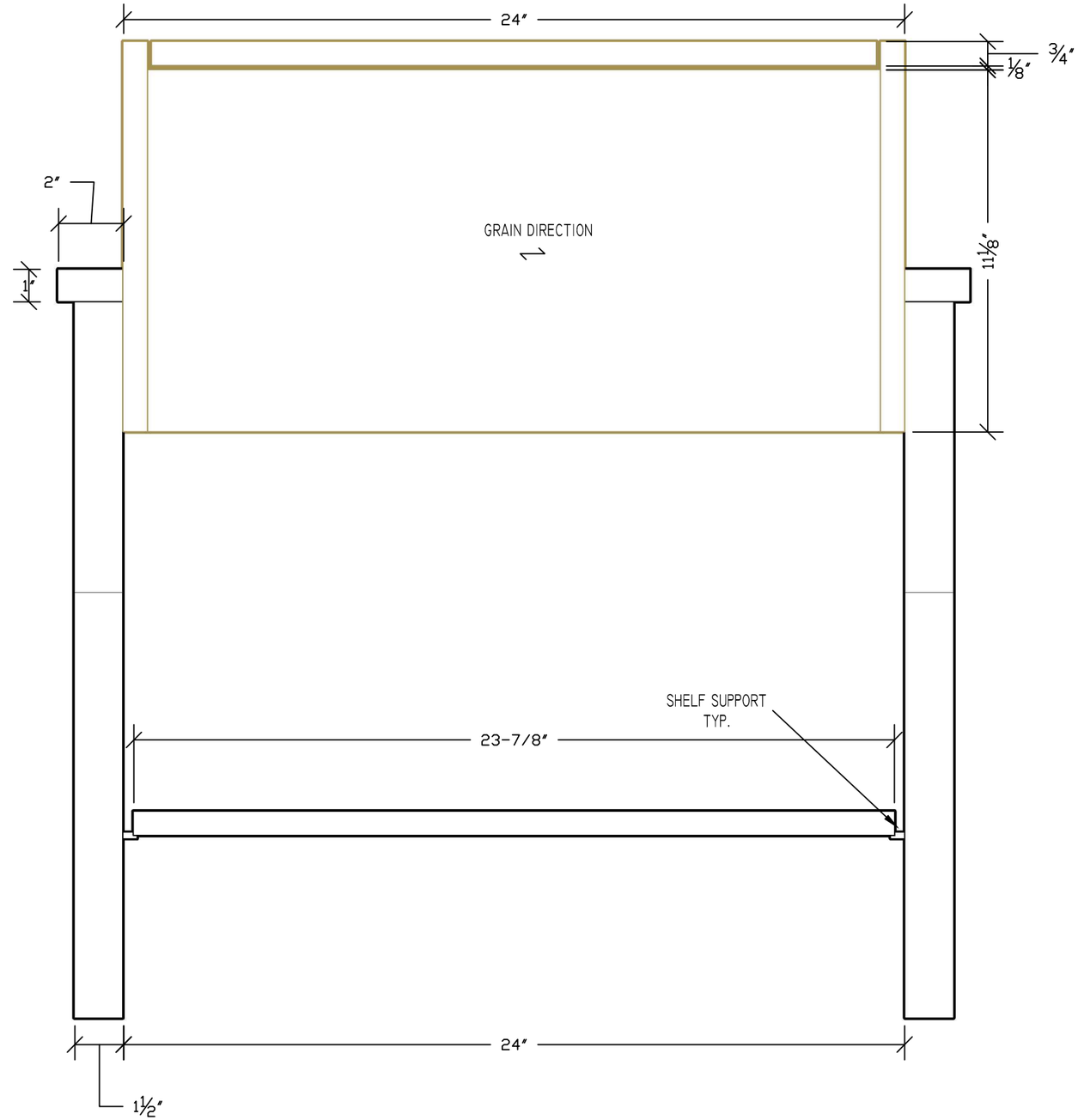

REAR ELEVATION 2
SCALE: 1-1/2"=12"

2015 SkillsUSA NLSC		
PROJECT ACCENT TABLE		
DRAWN BY: AJA	DATE: JUNE 2015	SCALE: N/A
NOTES		PAGE 1.2

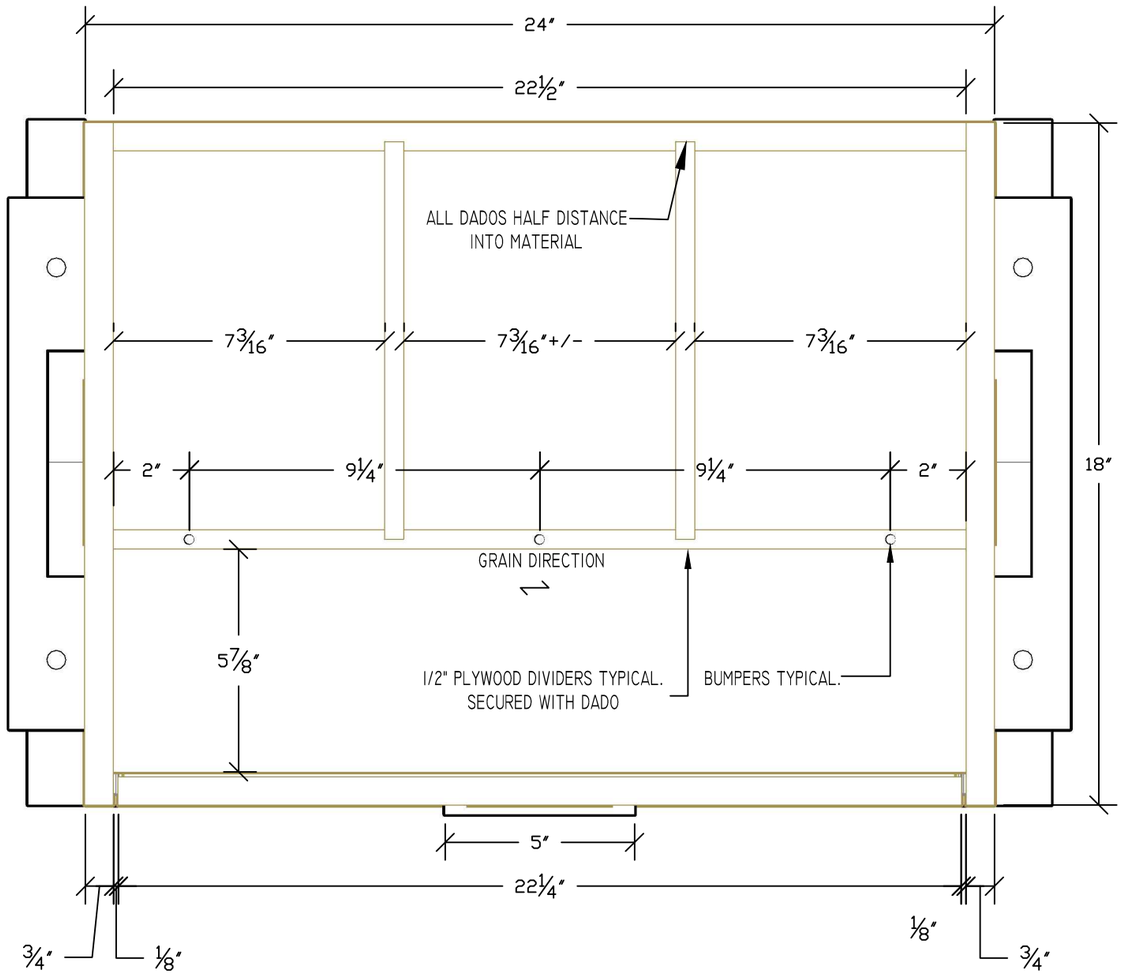

UPPER HORIZONTAL SECTION (1)
SCALE: 1-1/2"=12"

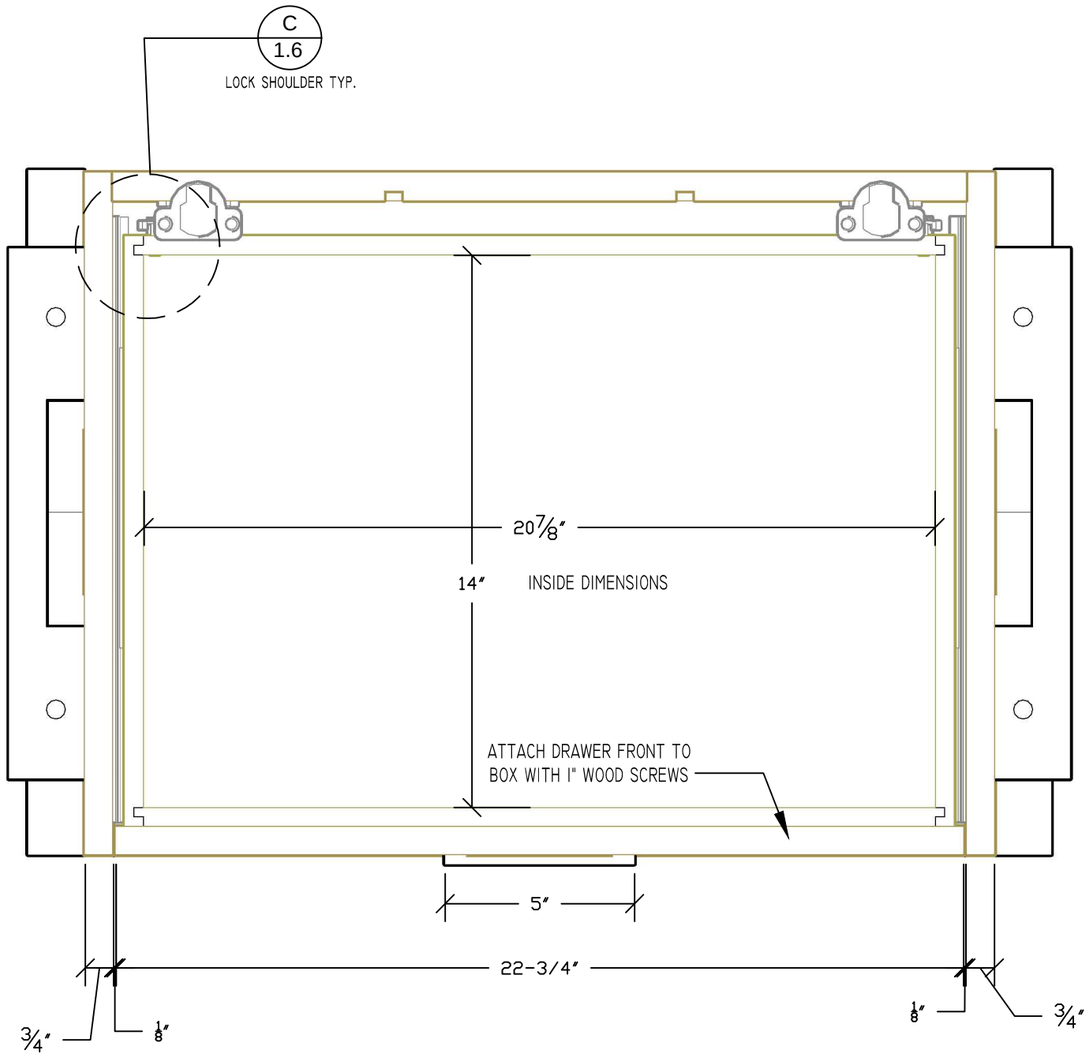

LOWER HORIZONTAL SECTION (2)
SCALE: 1-1/2"=12"

*NOTE: EDGEBAND ALL EXPOSED EDGES

2015 SkillsUSA NLSC		
PROJECT ACCENT TABLE		
DRAWN BY: AJA	DATE: JUNE 2015	SCALE: N/A
NOTES		PAGE 1.3

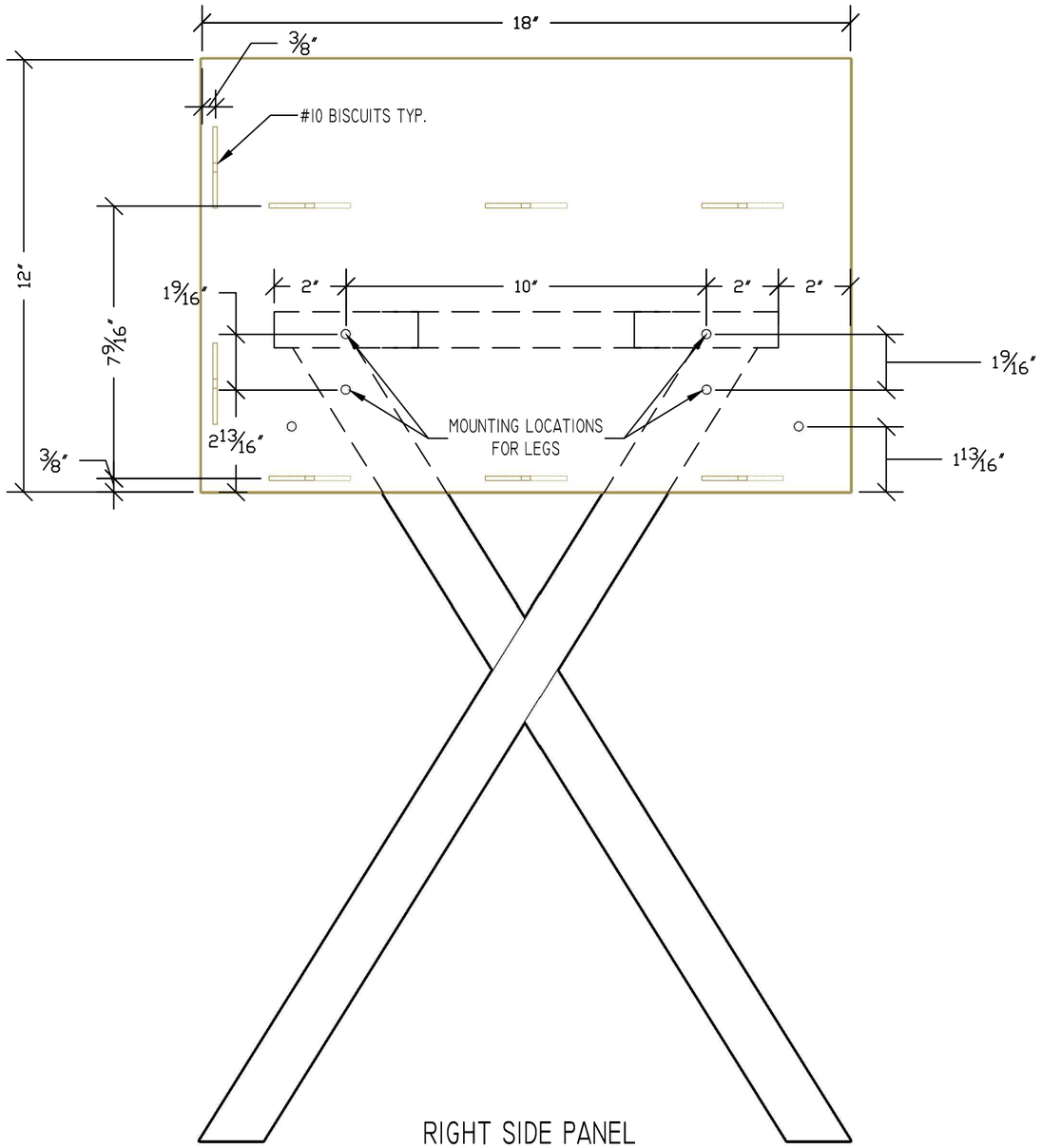

RIGHT SIDE PANEL
SCALE: 3"=12"

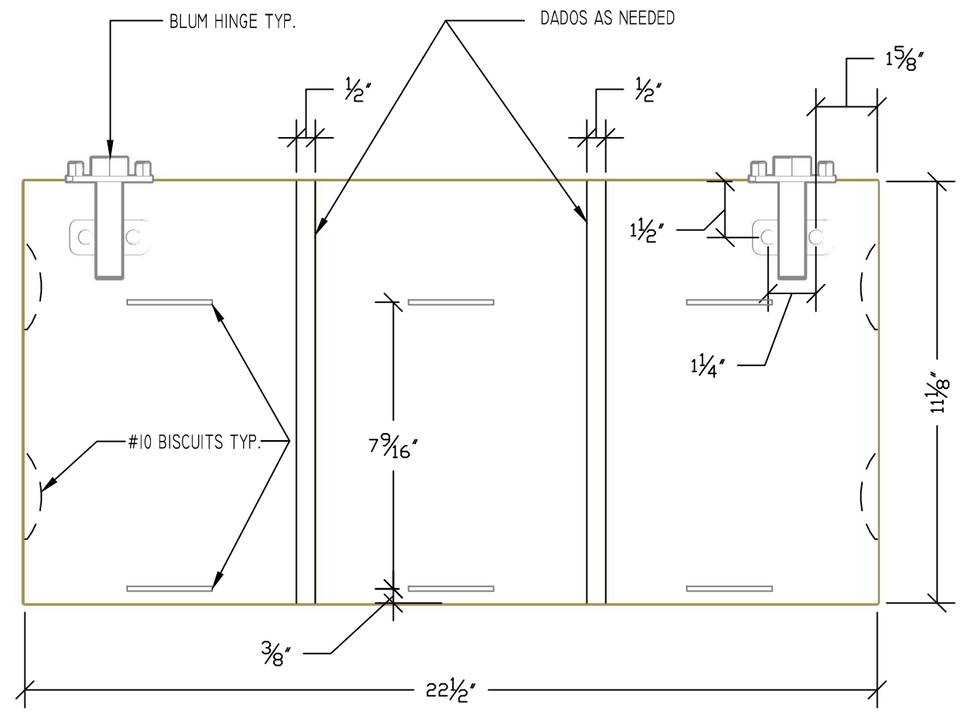

REAR PANEL
SCALE: 3"=12"

*NOTE: EDGEBAND ALL EXPOSED EDGES

2015 SkillsUSA NLSC		
PROJECT ACCENT TABLE		
DRAWN BY: AJA	DATE: JUNE 2015	SCALE: N/A
NOTES		PAGE 1.4

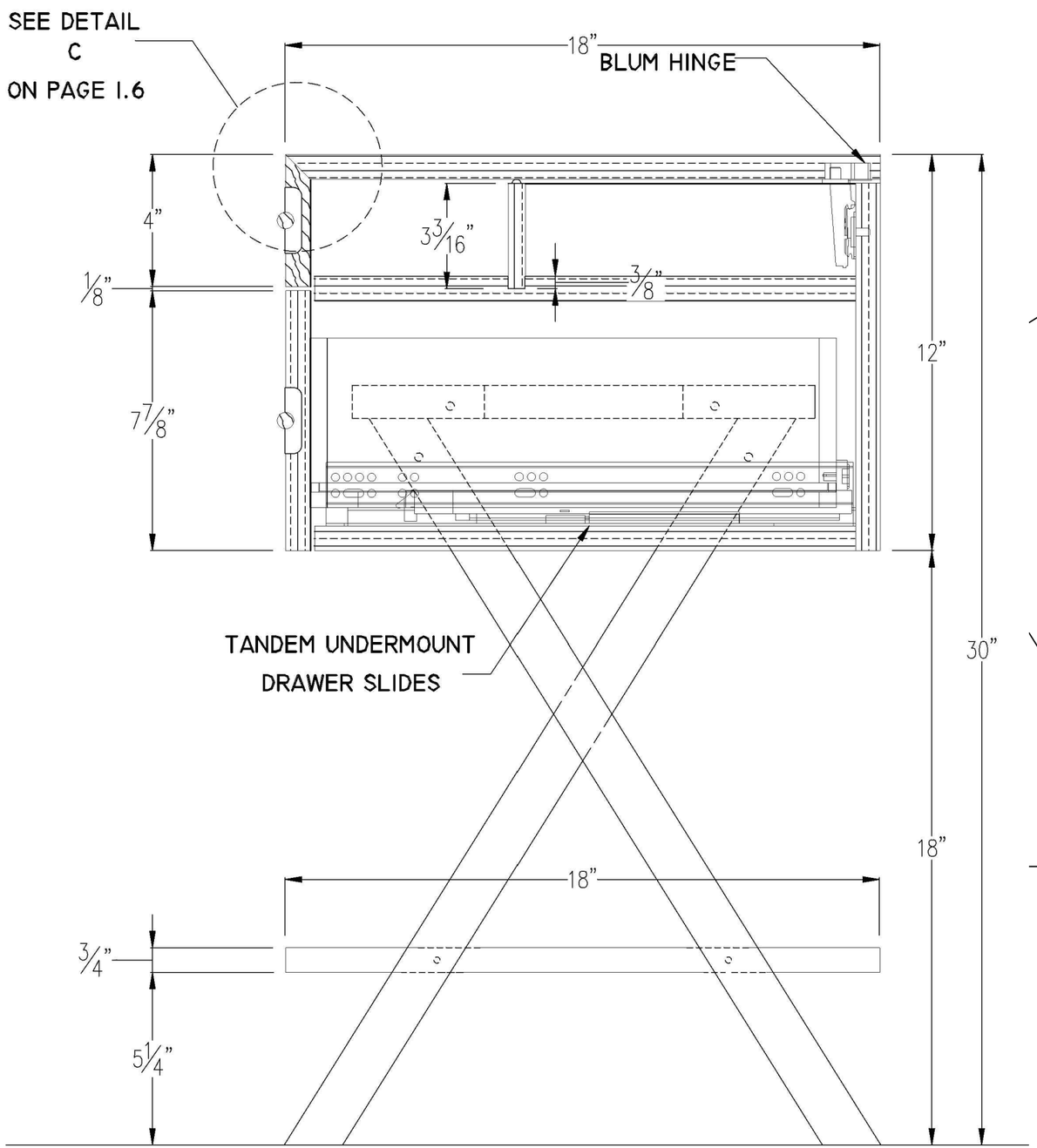

VERTICAL SECTION 1
SCALE: 3"=12"

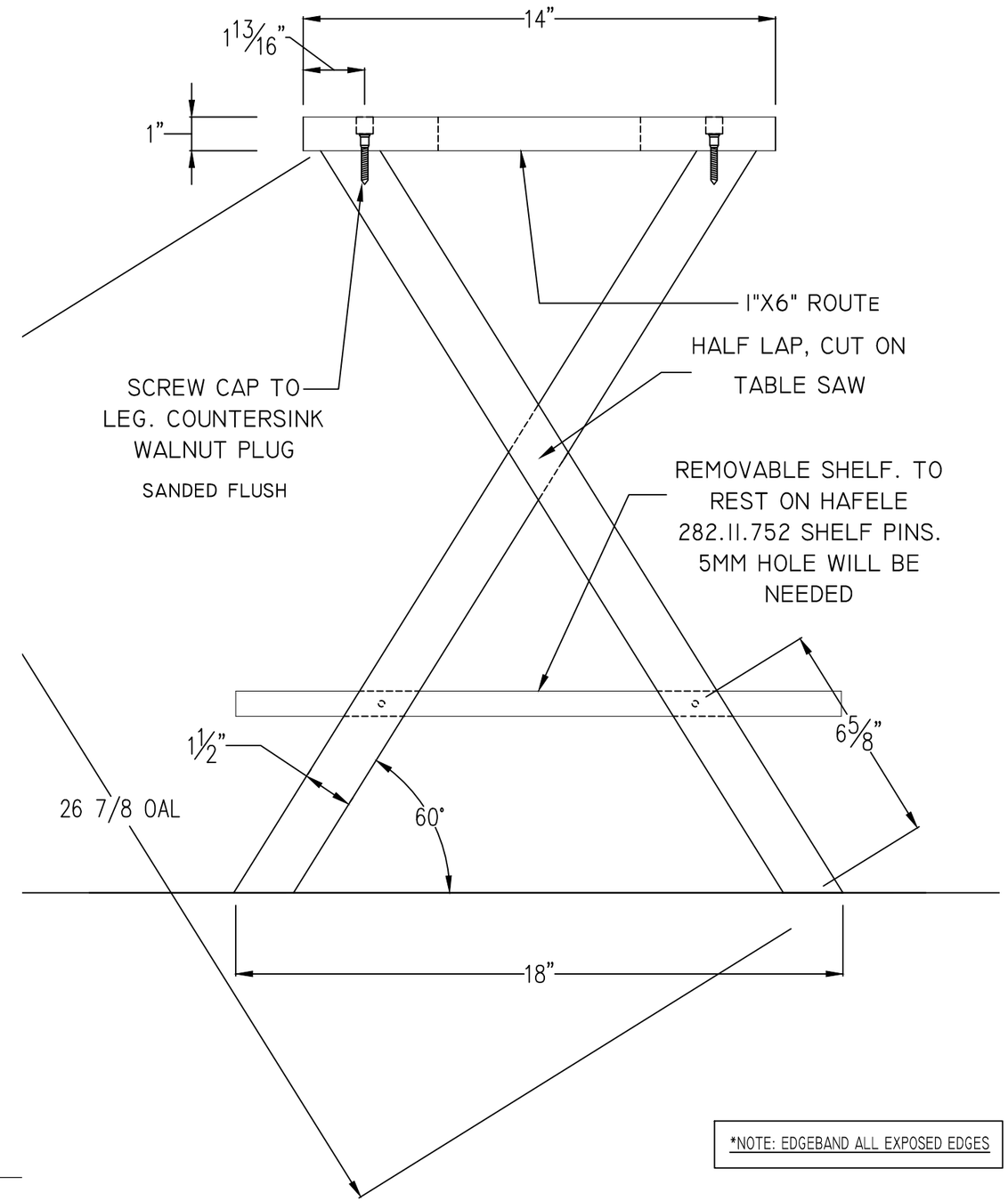

*NOTE: EDGEBAND ALL EXPOSED EDGES

SUPPORT LEG DETAIL A
SCALE: 3"=12"

2015 SkillsUSA NLSC		
PROJECT ACCENT TABLE		
DRAWN BY: AJA	DATE: JUNE 2015	SCALE: N/A
NOTES		PAGE 1.5

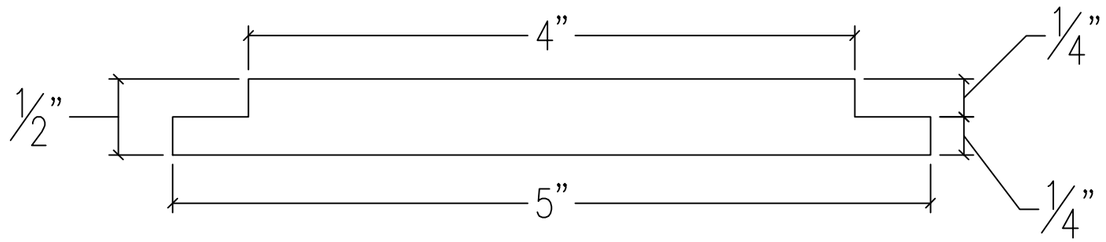

WALNUT DOWEL DETAIL (B)
SCALE: 12"=12"

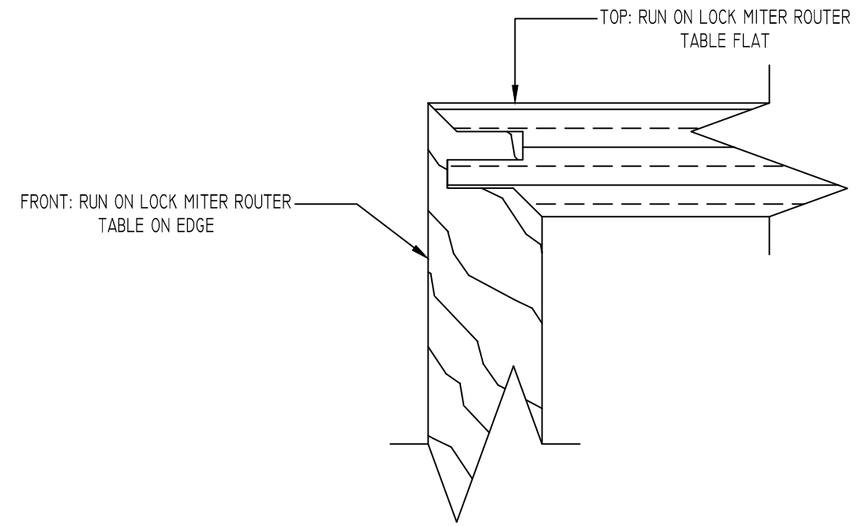

LOCK MITER DETAIL (C)
SCALE: 12"=12"

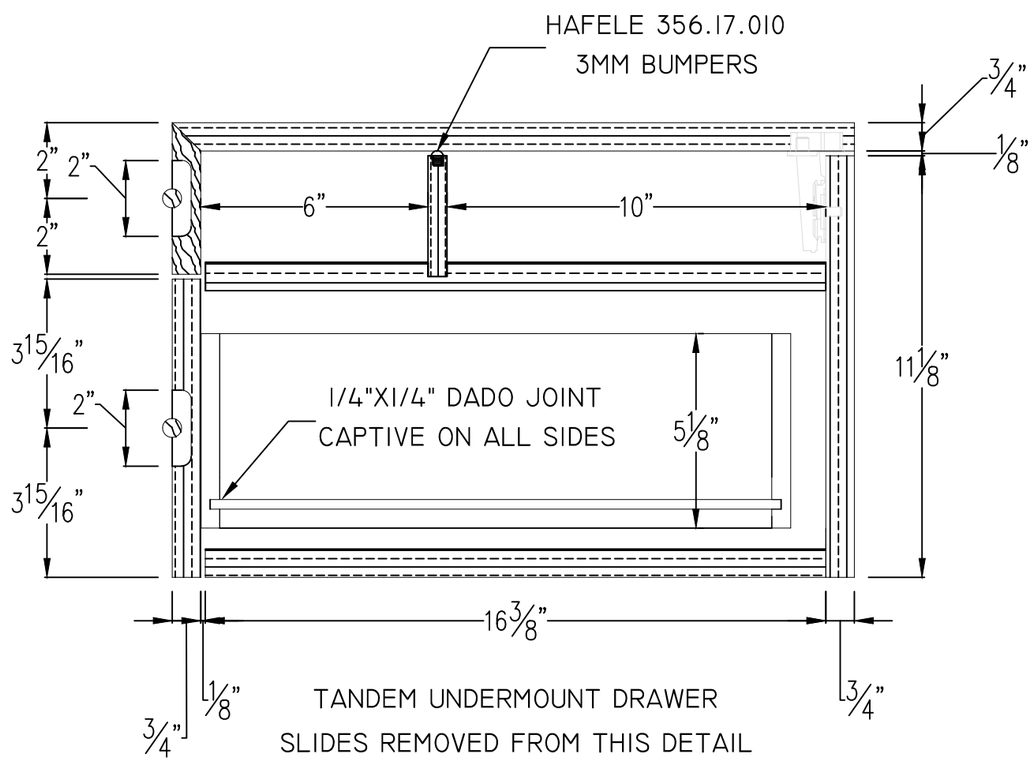

UPPER VERTICAL SECTION DETAIL (1)
SCALE: 3"=12"

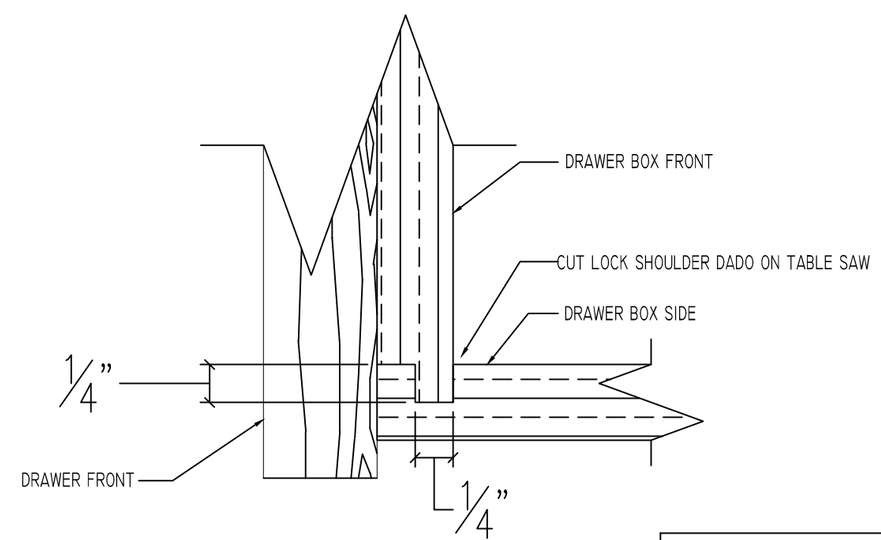

LOCK SHOULDER DETAIL (D)
SCALE: 12"=12"

*NOTE: EDGEBAND ALL EXPOSED EDGES

2015 SkillsUSA NLSC		
PROJECT ACCENT TABLE		
DRAWN BY: AJA	DATE: JUNE 2015	SCALE: N/A
NOTES		PAGE 1.6

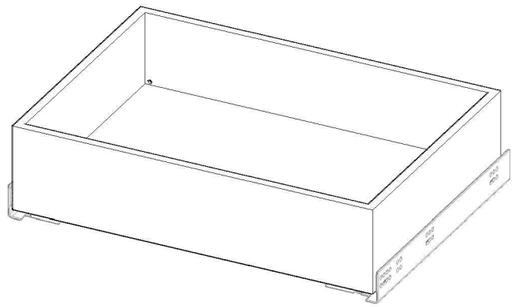

DRAWER BOX ISO (TOP)
SCALE: NTS

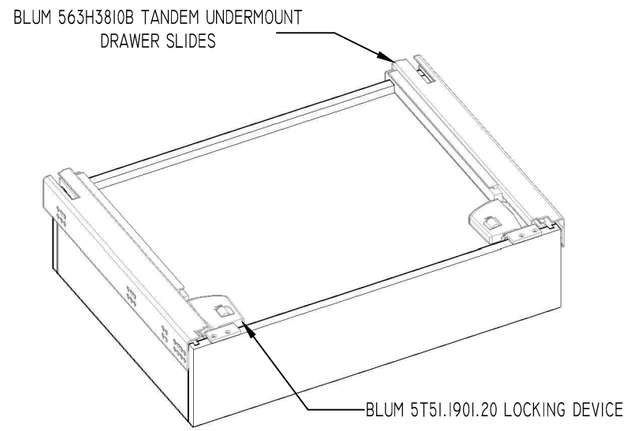

DRAWER BOX ISO (BOTTOM)
SCALE: NTS

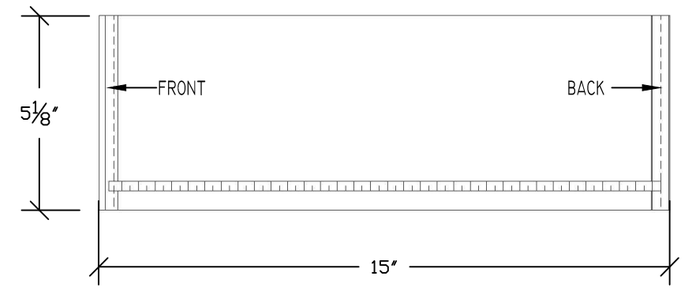

DRAWER BOX SECTION
SCALE: 3"=12"

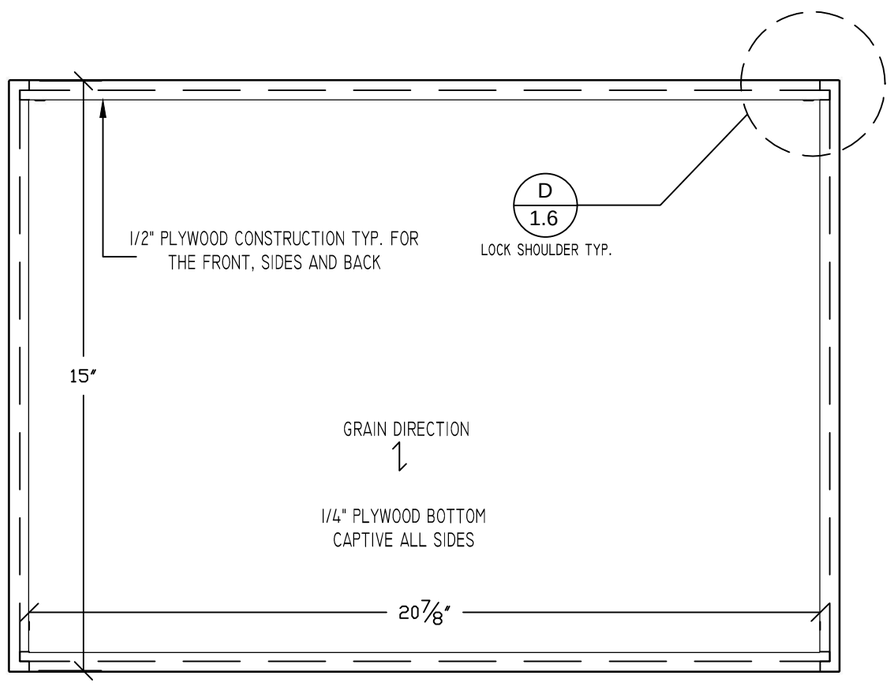

DRAWER BOX PLAN
SCALE: 3"=12"

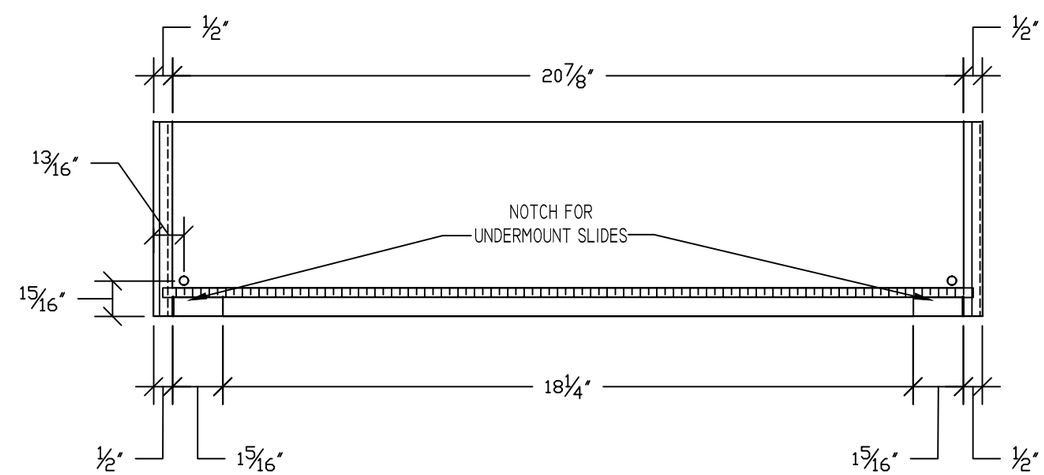

DRAWER BOX REAR
SCALE: 3"=12"

2015 SkillsUSA NLSC		
PROJECT ACCENT TABLE		
DRAWN BY: AJA	DATE: JUNE 2015	SCALE: N/A
NOTES		PAGE 1.7

UNIT ISOMETRIC VIEW
SCALE: NTS

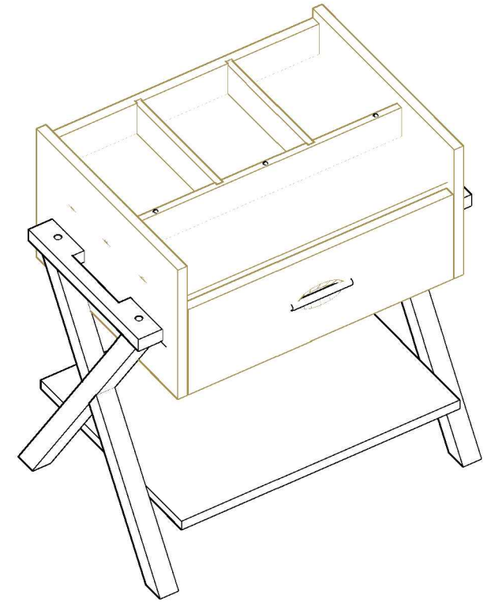

UNIT ISOMETRIC VIEW WITH LID REMOVED
SCALE: NTS

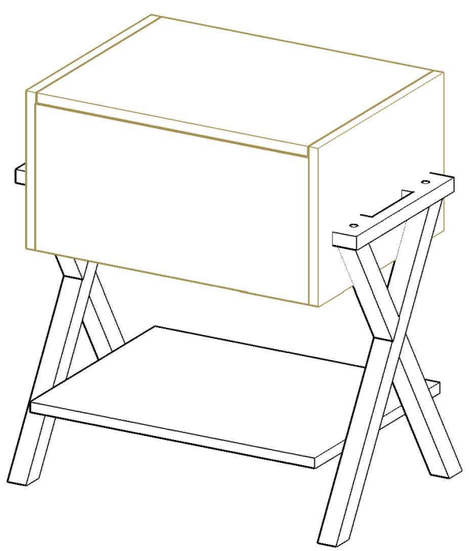

UNIT ISOMETRIC REAR VIEW
SCALE: NTS

2015 SkillsUSA NLSC		
PROJECT ACCENT TABLE		
DRAWN BY: AJA	DATE: JUNE 2015	SCALE: N/A
NOTES		PAGE 1.8

CONTESTANT#

_____

MATERIAL LIST - (DIMS MAY VARY)

QTY	MATERIAL	SIZE
3 PC	3/4 MAPLE PLYWOOD	3/4 X 24 X 48
1 PC	1/4 MAPLE PLYWOOD	1/4 X 24 X 24
3 PC	PREFINISHED DRAWER STOCK	1/2 X 5-1/8 X 60
4 PC	SOLID MAPLE	1-1/2 X 1-1/2 X 36
1 PC	SOLID MAPLE	1 X 5 X 18
1 PC	SOLID MAPLE	3/4 X 5 X 24
1 PC	SOLID MAPLE	3/4 X 8 X 24
1 PC	WALNUT DOWEL	1/2 X 12
24 EA	#10 BISCUITS	
2 EA	WOOD SCREW 1"	
12 EA	WOOD SCREW 1-1/2"	
4 EA	5 MMSHELF SUPPORT	
4 EA	#6 X 5/8 SCREWS	
4 EA	5MM BUMPERS	

CUTTING LIST

PART	MATERIAL	QTY	THICKNESS	WIDTH	LENGTH
LID TOP	MAPLE PLYWOOD				
SIDES	MAPLE PLYWOOD				
BACK	MAPLE PLYWOOD				
LID FRONT	MAPLE PLYWOOD				
DRAWER FRONT	MAPLE PLYWOOD				
BOTTOM	MAPLE PLYWOOD				
FIXED INSIDE SHELF	MAPLE PLYWOOD				
FRONT DIVIDER	PREFINISHED DRAWER STOCK				
INTERMEDIATE DIVIDERS	PREFINISHED DRAWER STOCK				
DRAWER FRONT AND BACK	PREFINISHED DRAWER STOCK				
DRAWER SIDES	PREFINISHED DRAWER STOCK				
DRAWER BOTTOM	MAPLE PLYWOOD				
HANDLE	SOLID MAPLE				
LEGS	SOLID MAPLE				
LOWER SHELF	MAPLE PLYWOOD				

2015 SkillsUSA NLSC

PROJECT
ACCENT TABLE

DRAWN BY: AJA | DATE: JUNE 2015 | SCALE: N/A

NOTES

PAGE
BILL CUT

CONTESTANT#

_____

MATERIAL LIST - (DIMS MAY VARY)

QTY	MATERIAL	SIZE
3 PC	3/4 MAPLE PLYWOOD	3/4 X 24 X 48
1 PC	1/4 MAPLE PLYWOOD	1/4 X 24 X 24
3 PC	PREFINISHED DRAWER STOCK	1/2 X 5-1/8 X 60
4 PC	SOLID MAPLE	1-1/2 X 1-1/2 X 36
1 PC	SOLID MAPLE	1 X 5 X 18
1 PC	SOLID MAPLE	3/4 X 5 X 24
1 PC	SOLID MAPLE	3/4 X 8 X 24
1 PC	WALNUT DOWEL	1/2 X 12
24 EA	#10 BISCUITS	
2 EA	WOOD SCREW 1"	
12 EA	WOOD SCREW 1-1/2"	
4 EA	5 MMSHELF SUPPORT	
4 EA	#6 X 5/8 SCREWS	
4 EA	5MM BUMPERS	

CUTTING LIST

PART	MATERIAL	QTY	THICKNESS	WIDTH	LENGTH
LID TOP	MAPLE PLYWOOD				
SIDES	MAPLE PLYWOOD				
BACK	MAPLE PLYWOOD				
LID FRONT	MAPLE PLYWOOD				
DRAWER FRONT	MAPLE PLYWOOD				
BOTTOM	MAPLE PLYWOOD				
FIXED INSIDE SHELF	MAPLE PLYWOOD				
FRONT DIVIDER	PREFINISHED DRAWER STOCK				
INTERMEDIATE DIVIDERS	PREFINISHED DRAWER STOCK				
DRAWER FRONT AND BACK	PREFINISHED DRAWER STOCK				
DRAWER SIDES	PREFINISHED DRAWER STOCK				
DRAWER BOTTOM	MAPLE PLYWOOD				
HANDLE	SOLID MAPLE				
LEGS	SOLID MAPLE				
LOWER SHELF	MAPLE PLYWOOD				

2015 SkillsUSA NLSC

PROJECT
ACCENT TABLE

DRAWN BY: AJA | DATE: JUNE 2015 | SCALE: N/A

NOTES

PAGE
TURN IN

JUDGE'S COPY

MATERIAL LIST - (DIMS MAY VARY)

QTY	MATERIAL	SIZE
3 PC	3/4 MAPLE PLYWOOD	3/4 X 24 X 48
1 PC	1/4 MAPLE PLYWOOD	1/4 X 24 X 24
3 PC	PREFINISHED DRAWER STOCK	1/2 X 5-1/8 X 60
4 PC	SOLID MAPLE	1-1/2 X 1-1/2 X 36
1 PC	SOLID MAPLE	1 X 5 X 18
1 PC	SOLID MAPLE	3/4 X 5 X 24
1 PC	SOLID MAPLE	3/4 X 8 X 24
1 PC	WALNUT DOWEL	1/2 X 12
24 EA	#10 BISCUITS	
2 EA	WOOD SCREW 1"	
12 EA	WOOD SCREW 1-1/2"	
4 EA	5 MMSHELF SUPPORT	
4 EA	#6 X 5/8 SCREWS	
4 EA	5MM BUMPERS	

CUTTING LIST - MASTER

PART	MATERIAL	QTY	THICKNESS	WIDTH	LENGTH
LID TOP	MAPLE PLYWOOD	1	3/4	18	22-1/4
SIDES	MAPLE PLYWOOD	2	3/4	12	18
BACK	MAPLE PLYWOOD	1	3/4	11-1/8	22-1/2
LID FRONT	SOLID MAPLE	1	3/4	4	22-1/4
DRAWER FRONT	SOLID MAPLE	1	3/4	7-7/8	22-1/4
BOTTOM	MAPLE PLYWOOD	1	3/4	16-3/8	22-1/2
FIXED INSIDE SHELF	MAPLE PLYWOOD	1	3/4	16-3/8	22-1/2
FRONT DIVIDER	PREFINISHED DRAWER STOCK	1	1/2	3-3/16	22-1/2
INTERMEDIATE DIVIDERS	PREFINISHED DRAWER STOCK	2	1/2	2-13/16	10-1/2
DRAWER FRONT AND BACK	PREFINISHED DRAWER STOCK	2	1/2	5-1/8	21-7/8
DRAWER SIDES	PREFINISHED DRAWER STOCK	2	1/2	5-1/8	15
DRAWER BOTTOM	MAPLE PLYWOOD	1	1/4	21-3/8	14-1/2
HANDLE	SOLID MAPLE	2	1	2	14
LEGS	SOLID MAPLE	4	1-1/2	1-1/2	26-7/8
LOWER SHELF	MAPLE PLYWOOD	1	3/4	18	23-7/8

2015 SkillsUSA NLSC

PROJECT
ACCENT TABLE

DRAWN BY: AJA | DATE: JUNE 2015 | SCALE: N/A

NOTES

PAGE
JUDGE

SkillsUSA
2015 Contest Projects

Carpentry

Click the “Print this Section” button above to automatically print the specifications for this contest. Make sure your printer is turned on before pressing the button.

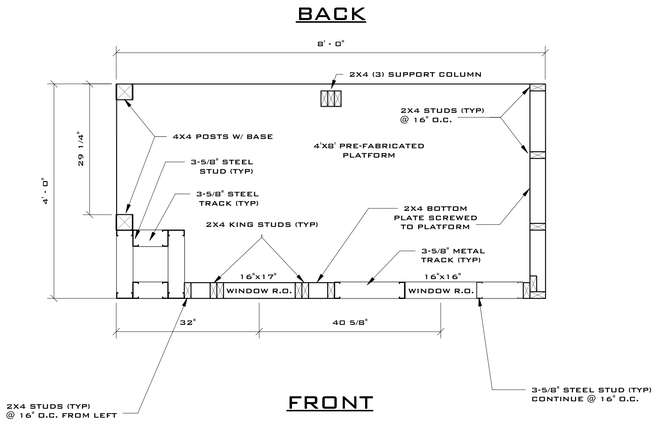

1 FLOOR PLAN 3/4"=1'-0"

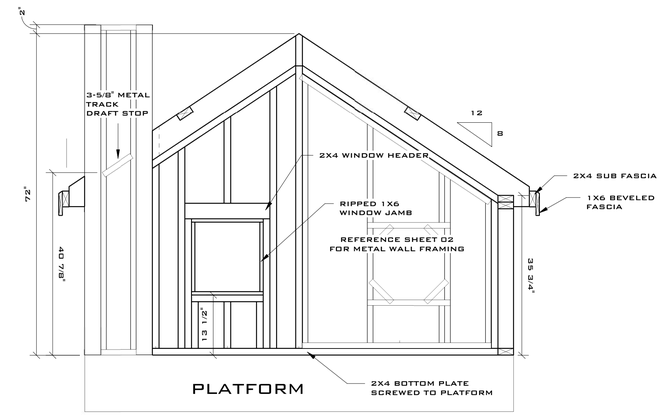

2 FRAMING ELEVATION - FRONT 3/4"=1'-0"

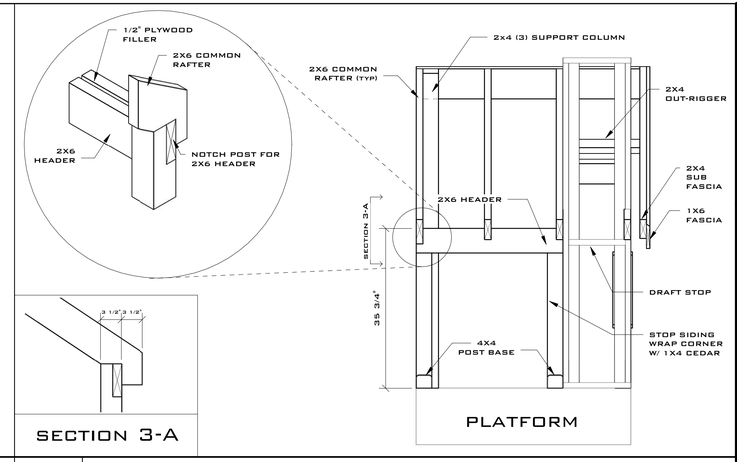

3 FRAMING ELEVATION - LEFT 3/4"=1'-0"

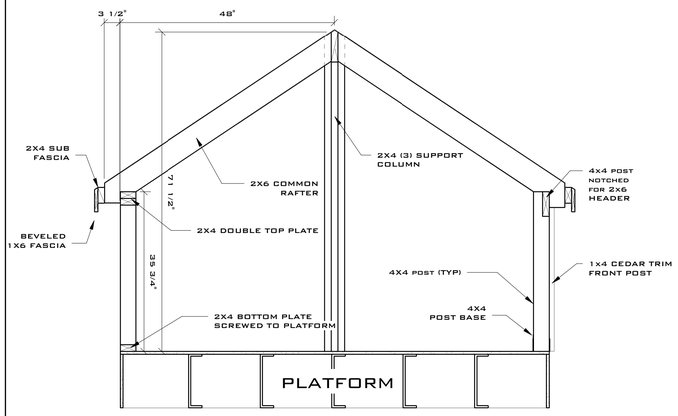

4 FRAMING ELEVATION - BACK 3/4"=1'-0"

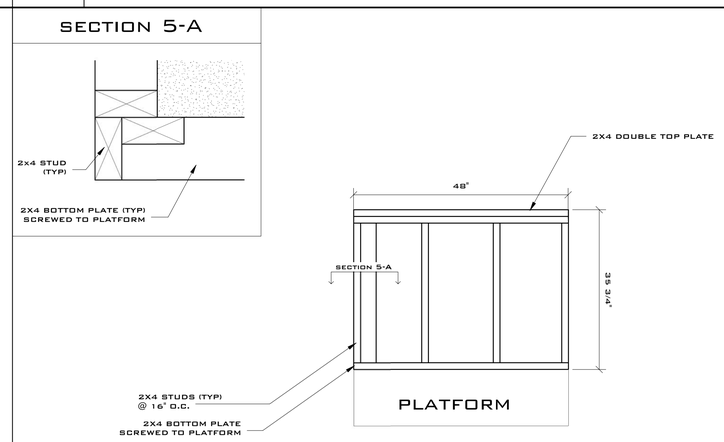

5 FRAMING ELEVATION - RIGHT 3/4"=1'-0"

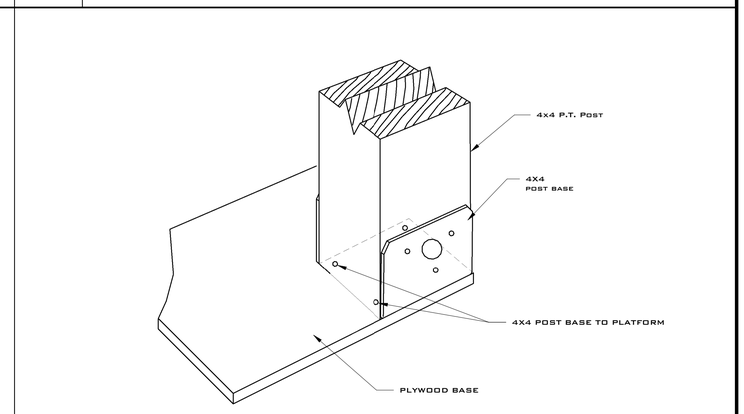

6 CORNER POST ANCHORAGE DETAIL N.T.S.

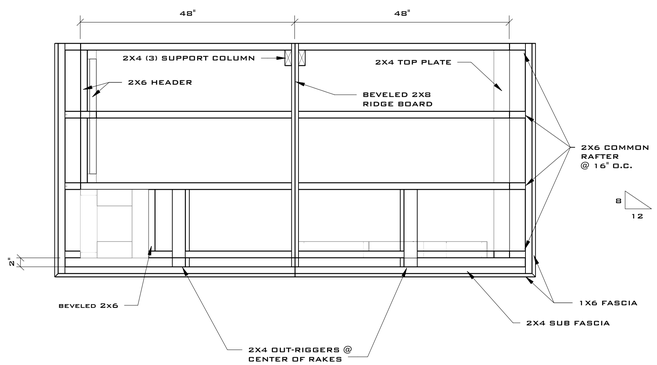

7 ROOF FRAMING PLAN 3/4"=1'-0"

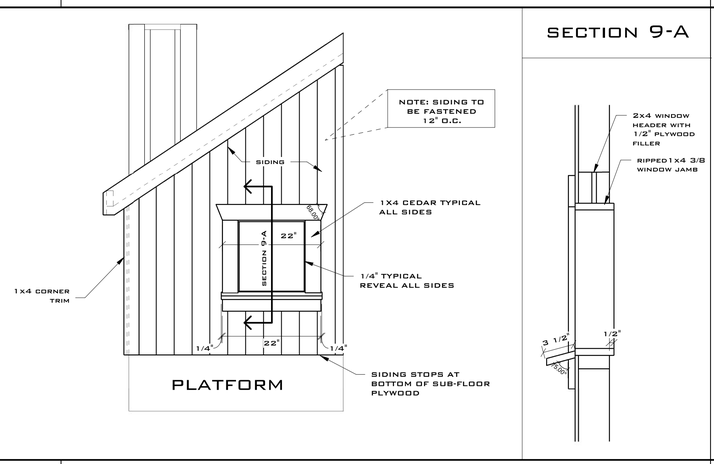

8 WINDOW TRIM DETAIL N.T.S.

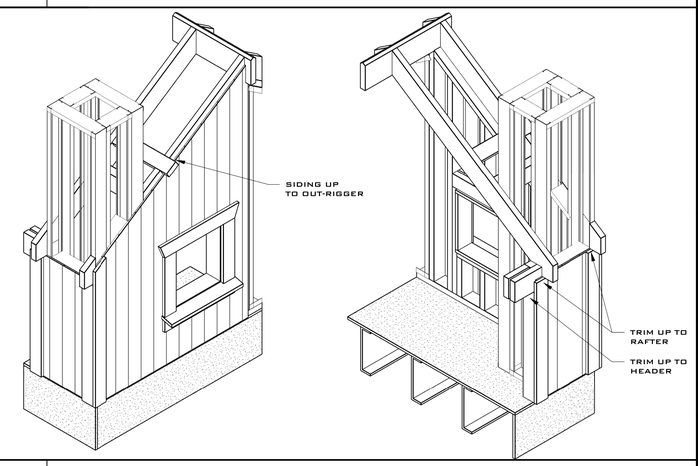

9 TRIM DETAIL VIEWS N.T.S.

SkillsUSA

51ST ANNUAL SKILLSUSA 2015 CARPENTRY CHAMPIONSHIPS

DATE 06-11-2015

SCALE AS NOTED

DRAWN BY WCW

SHEET 01 OF 2 SHEETS

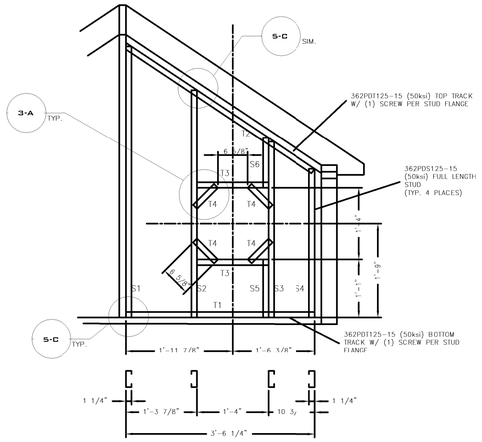

1 METAL WALL FRAMING - FRONT

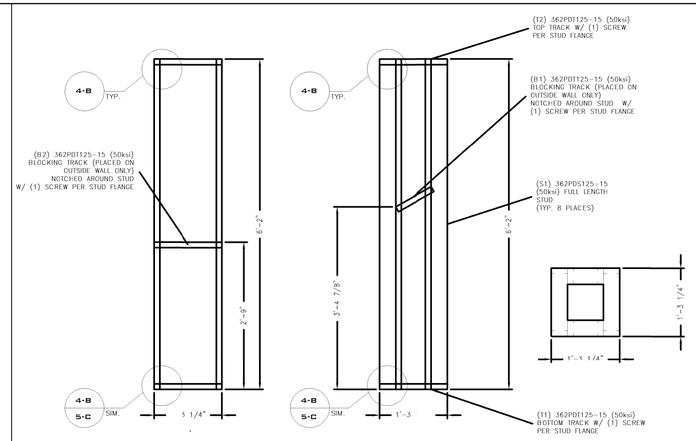

2 METAL WALL FRAMING - CHIMNEY N.T.S.

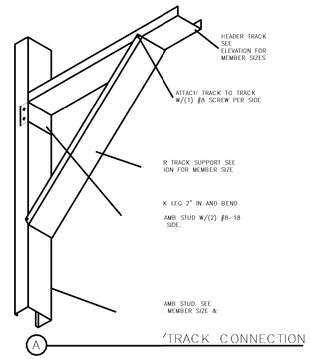

3 METAL WALL FRAMING - DETAIL 3/4"=1'-0"

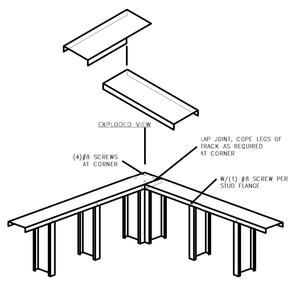

4 METAL WALL FRAMING - DETAIL N.T.S.

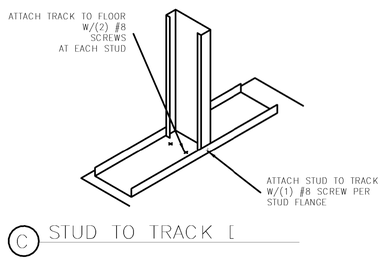

5 METAL WALL FRAMING DETAIL N.T.S.

TOTAL RISE = 27" (TREAD THICKNESS 5/4")
TOTAL RUN = 33" (OPEN RISER)
FINISH FLOORING = 5/4"
2" x 6" FLOOR JOIST (ACTUAL WIDTH 5-1/2")
5/8" NOSING AT TREADS

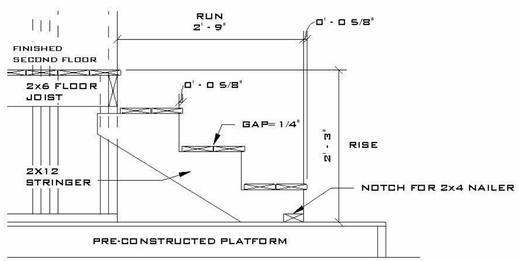

6 N/A N.T.S.

7 N/A N.T.S.

8 N/A N.T.S.

9 N/A N.T.S.

SkillsUSA

51ST ANNUAL SKILLSUSA
2015 CARPENTRY CHAMPIONSHIPS

DATE 06-11-2015

SCALE AS NOTED

DRAWN BY WCW

SHEET 02 OF 2 SHEETS

51st Annual SkillsUSA 2015 Carpentry Championships

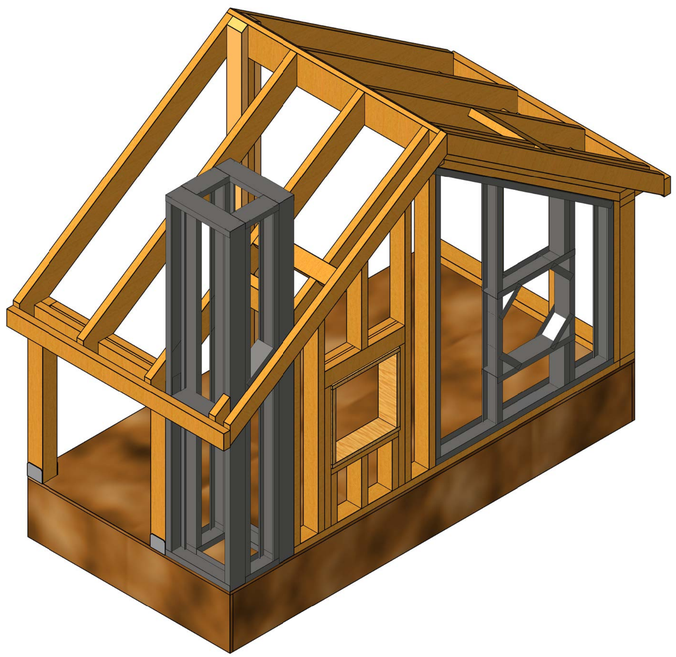

WOOD FRAMING

DESCRIPTION	QTY
1X4X8' CEDAR	3
1X6X8' CEDAR	1
1X6X6' P.T.	2
1X6X10' P.T.	1
2X4X6' WHITEWOOD	5
2X4X8' WHITEWOOD	9
2X4X10' WHITEWOOD	2
2X6X6' WHITEWOOD	8
2X6X8' WHITEWOOD	1
2X8X5' YELLOW PINE	1
2X12X5' YELLOW PINE	1
4X4X8' P.T.	1
4'X8'X3/8" SIDING	1
5"X4'X15/32" CDX	1
4X4 POST BRACKETS	2

STEEL FRAMING - WALL

CALLOUT	DESCRIPTION	LENGTH	QTY
T1	3-5/8" BOTTOM TRACK	3'-6 1/4"	1
T2	3-5/8" TOP TRACK	4'-2 7/8"	1
T3	3-5/8" HEADER/SILL TRACK	1'-8"	2
T4	3-5/8" WINDOW TRACK	6-5/8"	4
S1	3-5/8" FULL LENGTH STUD	5'-0 1/2"	1
S2	3-5/8" FULL LENGTH STUD	4'-2 3/4"	1
S3	3-5/8" FULL LENGTH STUD	3'-3 1/4"	1
S4	3-5/8" FULL LENGTH STUD	2'-9 1/4"	1
S5	3-5/8" CRIPPLE STUD	1'-0 7/8"	1
S6	3-5/8" CRIPPLE STUD	11-1/16"	1

STEEL FRAMING - CHIMNEY

CALLOUT	DESCRIPTION	LENGTH	QTY
T1	3-5/8" BOTTOM TRACK	3'-3 1/4"	4
T2	3-5/8" TOP TRACK	1'-3 1/4"	4
S1	3-5/8" FULL LENGTH STUD	6'-1 7/8"	8
B1	3-5/8" BLOCKING TRACK	1'-3 1/4"	1
B2	3-5/8" BLOCKING TRACK	9-1/4"	1

SkillsUSA
2015 Contest Projects

CNC Milling Specialist

Click the “Print this Section” button above to automatically print the specifications for this contest. Make sure your printer is turned on before pressing the button.

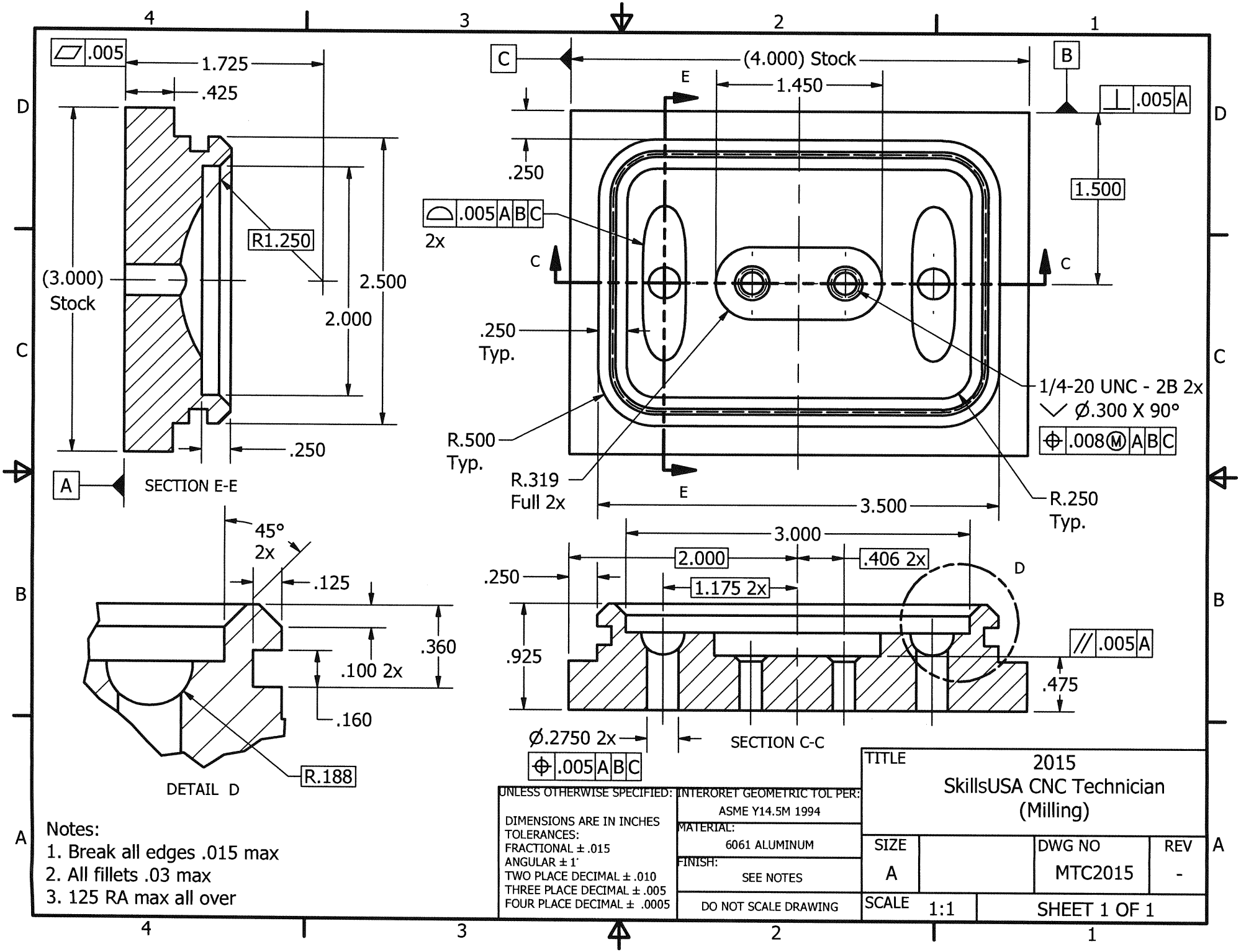
.005
1.725
.425
(3.000) Stock
R1.250
2.500
2.000
.250
A
SECTION E-E
C
(4.000) Stock
1.450
E
B
.005 A
.250
1.500
.005 A B C
2x
C
C
.250 Typ.
1/4-20 UNC - 2B 2x
Ø.300 X 90°
.008 M A B C
R.500 Typ.
R.319 Full 2x
E
3.500
R.250 Typ.
45° 2x
.125
.360
.100 2x
.160
R.188
DETAIL D
3.000
2.000
.406 2x
D
.250
1.175 2x
.925
.005 A
.475
Ø.2750 2x
.005 A B C
SECTION C-C
UNLESS OTHERWISE SPECIFIED:
DIMENSIONS ARE IN INCHES
TOLERANCES:
FRACTIONAL ± .015
ANGULAR ± 1°
TWO PLACE DECIMAL ± .010
THREE PLACE DECIMAL ± .005
FOUR PLACE DECIMAL ± .0005
INTERORET GEOMETRIC TOL PER:
ASME Y14.5M 1994
MATERIAL:
6061 ALUMINUM
FINISH:
SEE NOTES
DO NOT SCALE DRAWING
TITLE
2015
SkillsUSA CNC Technician
(Milling)
SIZE
A
DWG NO
MTC2015
REV
-
SCALE
1:1
SHEET 1 OF 1
Notes:
1. Break all edges .015 max
2. All fillets .03 max
3. 125 RA max all over

SkillsUSA
2015 Contest Projects

CNC Technician

Click the “Print this Section” button above to automatically print the specifications for this contest. Make sure your printer is turned on before pressing the button.

Scored By:_____ Contestant #

Specification	Value (points)	√
N1 rough Face (.020 on Z axis)	10	
N2 rough outside Profile and large Pocket (**no points**, codes are provided)		
N3 finish Slot/Groove	25	
N4 rough small Pocket (**no points**, codes are provided)		
N5 drill for reamed Holes	10	
N6 drill for tapped Holes	10	
N7 chamfer for tapped Holes; chamfer edges of Profile and Pocket	25	
N8 ream Holes	10	
N9 finish Full Radius Pockets (ball milling)	40	
N10 finish floor of large Pocket (**no points**, codes are provided)		
N11 finish outside Profile	25	
N12 finish large and small Pocket	25	
N13 tap Holes	10	
N14 finish Face	10	

Total Points Earned: _____

Total Possible Points: 200

Scored By:_____ Contestant #

Specification	Value (points)	√
N1 rough Face (.010 on Z axis)	10	
N2 drill Hole	10	
N3 rough ID Bore (-.020 on X axis and .003 on Z axis)	30	
N4 finish ID Groove (thread relief)	30	
N5 finish ID Thread (check program for feed rate of .08333)	10	
N6 finiish ID Profile (**no points**, codes are provided)		
N7 finish OD Profile	20	
Part is Flipped		
N8 rough OD Profile back -2.050 on Z depth (.020 on X axis and .003 on Z axis)	30	
N9 finish OD Groove and Thread Relief	50	
N10 finish OD Thread (check program for feed rate of .08333)	10	
N11 finish OD Profile (**no points**, codes are provided and references toolpath from **N8**)		

Total Points Earned: _____

Total Possible Points: 200

Milling Technician Skills 2015 MTC2015

VF-2 Machine Highlights

· 40 Taper Medium Duty Machining of Aluminum
· Rigid Tapping
· Programmable Coolant Nozzle

Set up information

Work Holding:

- Use 6.0” vise or equivalent for work holding
- Aluminum Jaws

Tools:

- See Tool List

Material:

- Material Type 6061-T6 Aluminum
- Material Size 1.0” x 3.0” x 4.0”

Machine Time:

- Cycle time in minutes 13 minutes

Programs:

- Vise jaw program O00997.NC
- Template program O02135.NC

Demo Descriptions :

- This part is completed in one operation
- Use 6.0” vise or equivalent for work holding
- Mill step in jaws 0.150” deep program O00997.nc
- Recommended to program using cutter compensation
- All tool diameter offsets are set to full diameter when using cutter compensation

Work Holding Vise Jaw Setup:

- Use a .500” Dia. End Mill to machine the vise jaws (O00997.nc).
  The program mills a stop on back left 0.150” deep x 0.150” wide.
- Clamp a 2.00” spacer in vise when machining.
- Set all tool length offsets from top of vise jaws.
- G59 X axis zero is the center of vise
- G59 Y axis zero is -1.00” from stationary jaw.
- G59 Z axis zero is top of jaws.

Work Offsets Information

- G54 X zero, Y zero left back corner as shown in Setup sheet.
- Set all tool length offsets from top of raw stock and adjust the G54 Z work offset -0.075” per Setup Sheet below.

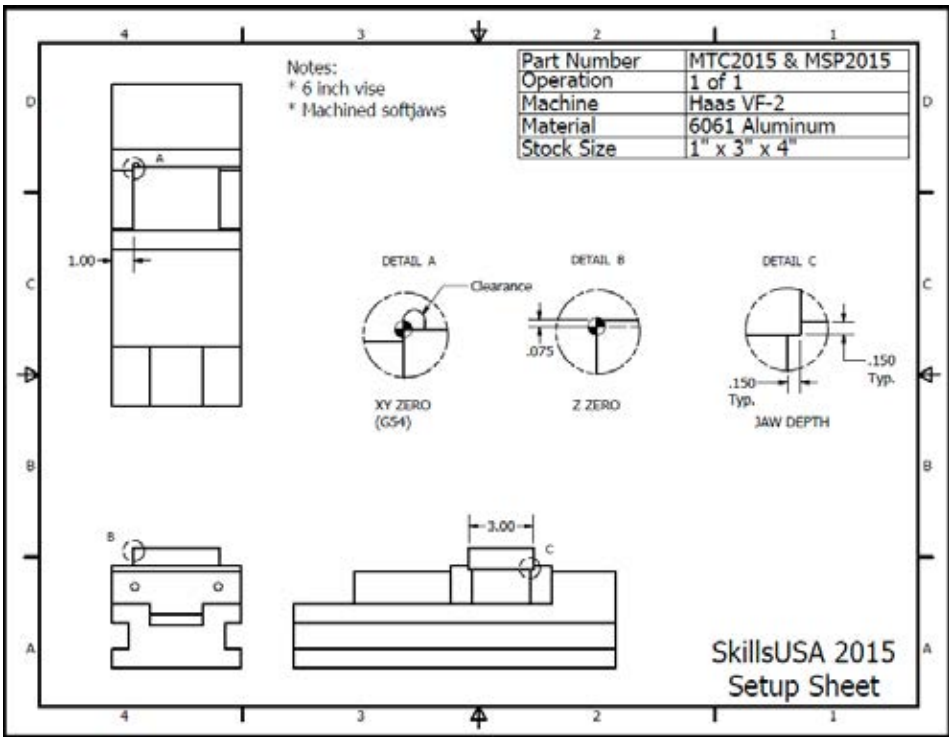

Competition Information

Save a copy of the template program by following the instructions below

Press the LIST PROG button, select the Memory tab, highlight program O01235.NC then type letter “O” followed by your contestant number then Press the F2 button to create a copy of the original program saved as your contestant number.
Edit this new program by following the operation instructions to complete the part per drawing MTC2015.

N1 Use (tool #1) 2.0” diameter shell mill face part to leave +.020”.

N2 Do not edit operation N2. This operation is roughing the profile and pocket of the part.

N3 Use (tool#15) .1575” wide x 3.986” diameter slotting mill to machine groove around profile of part.

N4 Do not edit operation N4. This operation is roughing the slot inside the pocket of the part.

N5 Use (tool# 4) .266” diameter drill in the correct location of the two .275 diameter holes (section E-E).

N6 Use (tool# 5) .205” diameter drill in the correct location of the two ¼-20 tapped holes.

N7 Use (tool#7) .500”x 45 degree chamfer tool to chamfer holes and edge of part per drawing.

N8 Use (tool# 8) .275” diameter reamer to ream two holes in the correct location (section E-E).

N9 Use (tool# 11) .375” diameter ball end mill to machine two slots in (section E-E).

N10 Do not edit operation N10. This operation finished the floor of the pocket.

N11 Use (tool# 12) .625” diameter end mill to finish the profile of the part.

N12 Use (tool# 3) .375” diameter end mill to finish the slot and inside of the pocket staying +.003 off the finished floor.

N13 Use (tool# 9) ¼-20 tap for the two tapped holes.

N14 Use (tool #1) 2.0” diameter shell mills to finish facing the part.

Save a copy of the finished program to the provided USB device by following the instructions below

Plug the USB device into the simulator, Press the LIST PROG button, select the Memory tab, highlight the program with your contestant number and Press the F2 button , select USB Device in the Copy To window and press WRITE/ENTER twice.

Tool Information:

Tool Number: Cutter Type: Holder Type:	1 2.0” Shell Mill
Cutter Supplier: Order Code:	Sandvik RA245-051 R19-12H
Insert Supplier: Order code	R245-12 T3E-AL H10
Holder Supplier: Order Code:	Sandvik AA3B05-40 19 38
Collet Supplier: Order Code:	N/A N/A

Tool Number: Cutter Type: Holder Type:	2 0.625” End Mill
Cutter Supplier: Order Code:	Sandvik AE16-A16-SS-030
Insert Supplier: Order code	Sandvik A316-16SM350-06208P 1030
Holder Supplier: Order Code:	Sandvik 930-V40-S-20-090
Collet Supplier: Order Code:	Sandvik A393.CGS-20 10 52

Tool Number: Cutter Type: Holder Type:	3 .375” End Mill
Cutter Supplier: Order Code:	SGS
Insert Supplier: Order code:	
Holder Supplier: Order Code:	Sandvik 930-V40-S-20-090
Collet Supplier: Order Code:	Sandvik A393.CGS-20 06 52

Tool Number:	4
Cutter Type:	.266” Dia. Drill
Holder Type:	
Cutter Supplier:	Sandvik
Order Code:	460.1-0675-020A0-XM GC34
Insert Supplier:	
Order code:	
Holder Supplier:	Sandvik
Order Code:	AA3B14-40 32 079
Collet Supplier:	Sandvik
Order Code:	393.14-32 080

Tool Number:	5
Cutter Type:	0.205 Dia. Drill
Holder Type:	
Cutter Supplier:	Sandvik
Order Code:	460.1-0520-016A0-XM GC34
Holder Description	
Holder Supplier:	Sandvik
Order Code:	AA3B14-40 32 079
Collet Supplier:	Sandvik
Order Code:	393.14-32 060

Tool Number:	6
Cutter Type:	0.625” End Mill
Holder Type:	
Cutter Supplier:	Sandvik
Order Code:	AE16-A16-SS-030
Insert Supplier:	Sandvik
Order code	A316-16SM350-06208P 1030
Holder Supplier:	Sandvik
Order Code:	930-V40-S-20-090
Collet Supplier:	Sandvik
Order Code:	A393.CGS-20 10 52

Tool Number:	7
Cutter Type:	.500” Chamfer Mill
Holder Type:	
Cutter Supplier:	Sandvik
Order Code:	AE12-A12-SS-030
Insert Supplier:	Sandvik
Order code:	A316-12CM600-05045G 1030
Holder Supplier:	Sandvik
Order Code:	AA3B14-40 32 079
Collet Supplier:	Sandvik
Order Code:	393.14-32 130

Tool Number:	8
Cutter Type:	.275 Dia. Reamer
Holder Type:	
Cutter Supplier:	Sandvik
Order Code:	435.T-0700-A1-XF
Insert Supplier:	
Order code:	
Holder Supplier:	Sandvik
Order Code:	AA3B14-40 32 079
Collet Supplier:	Sandvik
Order Code:	393.14-32 080

Tool Number:	9
Cutter Type:	¼-20 Tap
Holder Type:	
Cutter Supplier:	Sandvik
Order Code:	E8861/4
Holder Description	
Holder Supplier:	Sandvik
Order Code:	970-V40-25-122
Collet Supplier:	Sandvik
Order Code:	A393.14-25-1/4

Tool Number:	*10*
Cutter Type:	*.375” End Mill*
Holder Type:	
Cutter Supplier:	SGS
Order Code:	
Insert Supplier:	
Order code:	
Holder Supplier:	Sandvik
Order Code:	930-V40-S-20-090
Collet Supplier:	Sandvik
Order Code:	A393.CGS-20 06 52

Tool Number:	11
Cutter Type:	.375” Ball End Mill
Holder Type:	
Cutter Supplier:	Sandvik
Order Code:	1B232-0953-XA 1620
Insert Supplier:	
Order code:	
Holder Supplier:	Sandvik
Order Code:	930-V40-S-20-090
Collet Supplier:	Sandvik
Order Code:	A393.CGS-20 06 52

Tool Number:	12
Cutter Type:	0.625” End Mill
Holder Type:	
Cutter Supplier:	SGS
Order Code:	
Insert Supplier:	
Order code	
Holder Supplier:	Sandvik
Order Code:	930-V40-S-20-090
Collet Supplier:	Sandvik
Order Code:	A393.CGS-20 10 52

Tool Number: Cutter Type: Holder Type:	15 3.986” Slotting Mill	
Cutter Supplier: Order Code:	A329-102R19-H	
Insert Supplier: Order code	Sandvik N123H2-0400-0002-CM 1125	
Holder Supplier: Order Code:	Sandvik AA3B05-40 19 38	
Collet Supplier: Order Code:	Sandvik A393.CGS-20 10 52	

Lathe Technician Skills 2015 TTC2015

ST-10 Lathe Highlights

· 6000 RPM Spindle
· 12 Station BOT Turret
· Automatic Tool Probe

Set up information

Work Holding:

- 1.80” length Chuck Jaws

Tools:

- See Tool List

Material:

- Material Type 6061-T6 Aluminum
- Material Size 2.0” Dia. x 4.0” Long

Machine Time:

- Cycle time in minutes 6 minutes

Programs:

- Chuck jaw program O00998.NC
- Template program O02015.NC

Description :

- This part is completed in two operations
- Use 1.8” tall chuck jaws
- Machine jaw ID 1.95” Dia. and profile using program O00998.nc

Work Holding (Chuck Jaw) Setup:

Work Offsets Information

- Set all tool offsets with the automatic tool probe. Set work offset G54 Z axis zero -0.05 from the face of the raw stock. Set work offset G55
  per Setup Sheet below.

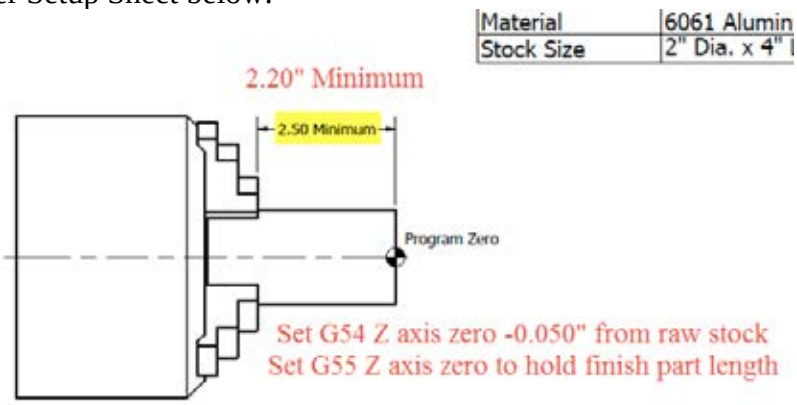

Competition Information

Save a copy of the template program by following the instructions below

- Press the LIST PROG button, select the Memory tab, highlight program O02015.NC then type letter “O” followed by your contestant number then Press the F2 button to create a copy of the original program saved as your contestant number.
- Edit this new program by following the operation instructions to complete the part per drawing TTC2015.
- The “Nxx” numbers below are the order of tool paths used in the template program.
- The tool number used for each tool path may not match the “Nxx” number.
- This part is completed in two operations. The first operation uses work offset G54 to complete half of the part. All tool paths are programed from Z axis zero. There is an “M00” with a message to flip the part for the second operation.
- The second operation uses work offset G55 to complete the part.

N1 Use (tool #1) OD turning tool face part to leave +.010”.

N2 Use (tool #10) 0.750” diameter drill to drill the correct depth Z depth.

N3 Use (tool#2) ID boring bar to rough ID profile leaving material for finish (X-.020” and Z 0.002”).

N4 Use (tool# 4) .157” wide ID Groove to finish 1.650” diameter ID groove per drawing.

N5 Use (tool#5) ID Threading bar to finish 1.50” ID thread.

N6 Use (tool#3) ID boring bar to finish ID profile. Do not edit this operation..

N7 Use (tool#12) OD turning to finish OD profile of part 2.05” maximum Z depth.

M00 Do not edit this M-code.

N8 Use (tool #1) OD turning tool face part to leave +.010”and rough OD profile leaving material for finish (X0.020” and Z 0.003”) 2.05” maximum Z depth..

N9 Use (tool# 6) .1574” wide groove tool to finish the two OD grooves per drawing.

N10 Use (tool# 7) OD threading tool. Add the correct feed to the G76 block 1¾ diameter thread.

N11 Use (tool# 12) OD turning to finish OD profile. Do not edit this operation.

Save a copy of the finished program to the provided USB device by following the instructions below

Plug the USB device into the simulator, Press the LIST PROG button, select the Memory tab, highlight the program with your contestant number and Press the F2 button , select USB Device in the Copy To window and press WRITE/ENTER twice.

Tool Information:

Tool Number: Station Number: Tool Type:	1 1 Rough OD
Holder Supplier Order Code:	Sandvik SCLCR123B
Insert Supplier: Order Code: Insert Nose Radius: Grade Selection:	Sandvik CCGX 3 (2.5)2-AL 0.0312" H10

Tool Number: Station Number: Tool Type:	2 2 Rough Bore ID
Holder Supplier Order Code:	Sandvik A08M-SCLCR 2-R
Insert Supplier: Order Code: Insert Nose Radius: Grade Selection:	Sandvik CCGX 2 (1.5)1-AL H10 0.015" 4325

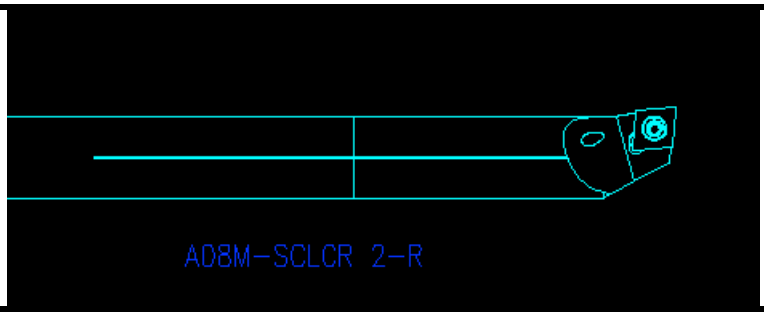

Tool Number: Station Number: Tool Type:	3 3 Finish Bore ID
Holder Supplier Order Code:	Sandvik A08M-SCLCR 2-R
Insert Supplier: Order Code: Insert Nose Radius: Grade Selection:	Sandvik CCGX 2 (1.5)1-AL H10 0.015" 4325

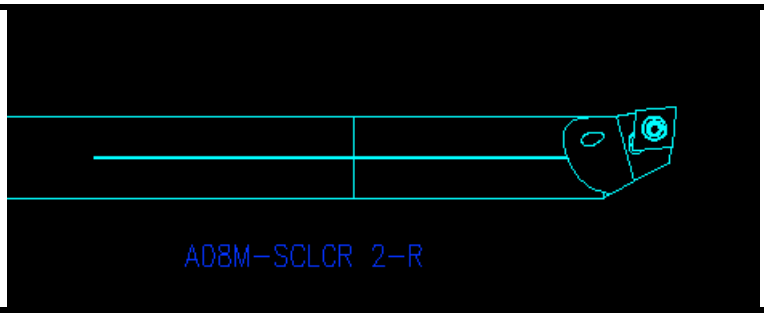

Tool Number: Station Number: Tool Type:	4 4 ID Groove
Holder Supplier Order Code:	Sandvik RAG151.32-D16-30
Insert Supplier: Order Code: Insert Nose Radius: Grade Selection:	Sandvik N151.3 400-30-7C 0.008" 1125

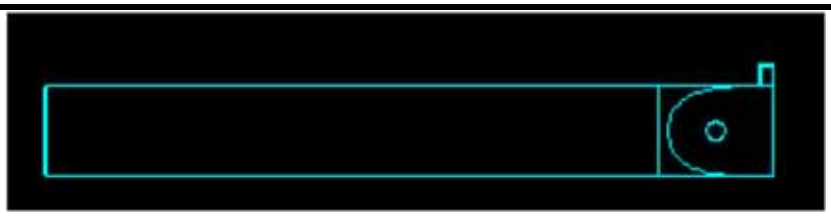

Tool Number: Station Number: Tool Type:	5 5 ID Thread
Holder Supplier Order Code:	Sandvik 266RKF-D16-3
Insert Supplier: Order Code: Insert Nose Radius: Grade Selection:	Sandvik 266RL-16UN01A120M 1125

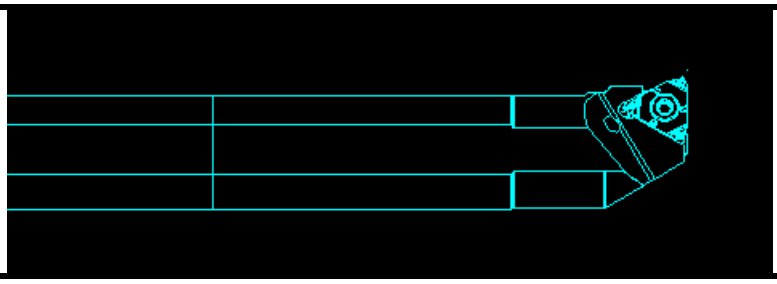

Tool Number: Station Number: Tool Type:	6 6 OD Groove
Holder Supplier Order Code:	Sandvik RF123H051-12BM
Insert Supplier: Order Code: Insert Nose Radius: Grade Selection:	Sandvik N123H2-0400-0002-GF 0.008" H13A

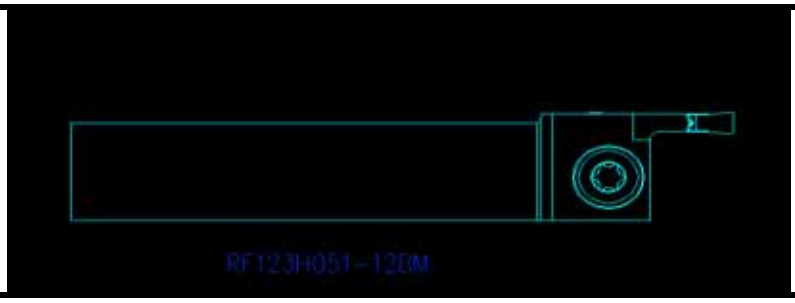

Tool Number: Station Number: Tool Type:	7 7 OD Thread
Holder Supplier Order Code:	Sandvik 266RFG-123B
Insert Supplier: Order Code: Insert Nose Radius: Grade Selection:	Sandvik 266RG-16UN01A120M 1125

Tool Number: Station Number: Tool Type:	10 10 0.75 Dia. Drill
Holder Supplier Order Code:	Sandvik A880-D0750P25-03
Insert Supplier: Order Code OD: Order Code Center: Grade Selection:	Sandvik 880-03 03 W06H-P-LM 880-03 03 05H-C-LM H13A

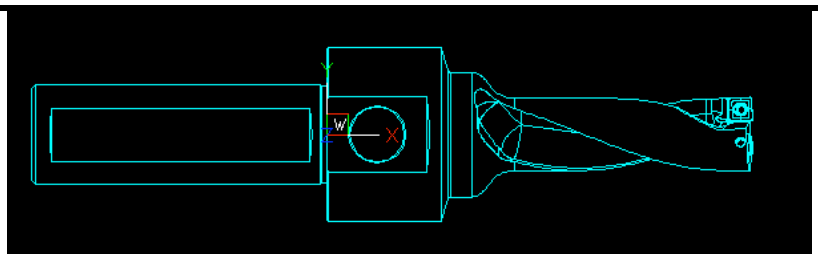

Tool Number: Station Number: Tool Type:	12 12 Finish OD
Holder Supplier Order Code:	Sandvik SCLCR123B
Insert Supplier: Order Code: Insert Nose Radius: Grade Selection:	Sandvik CCGX 3 (2.5)1-AL 0.015" H10

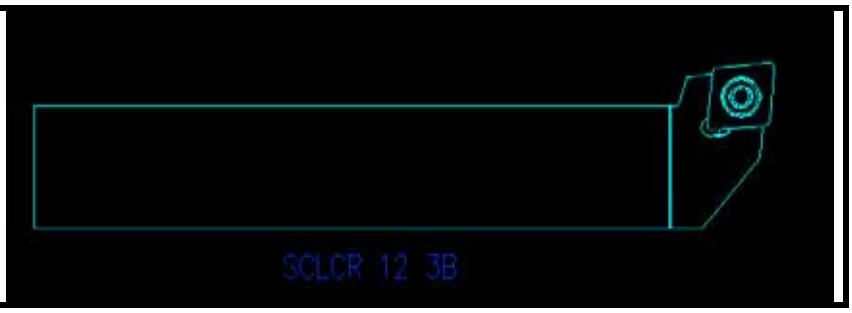

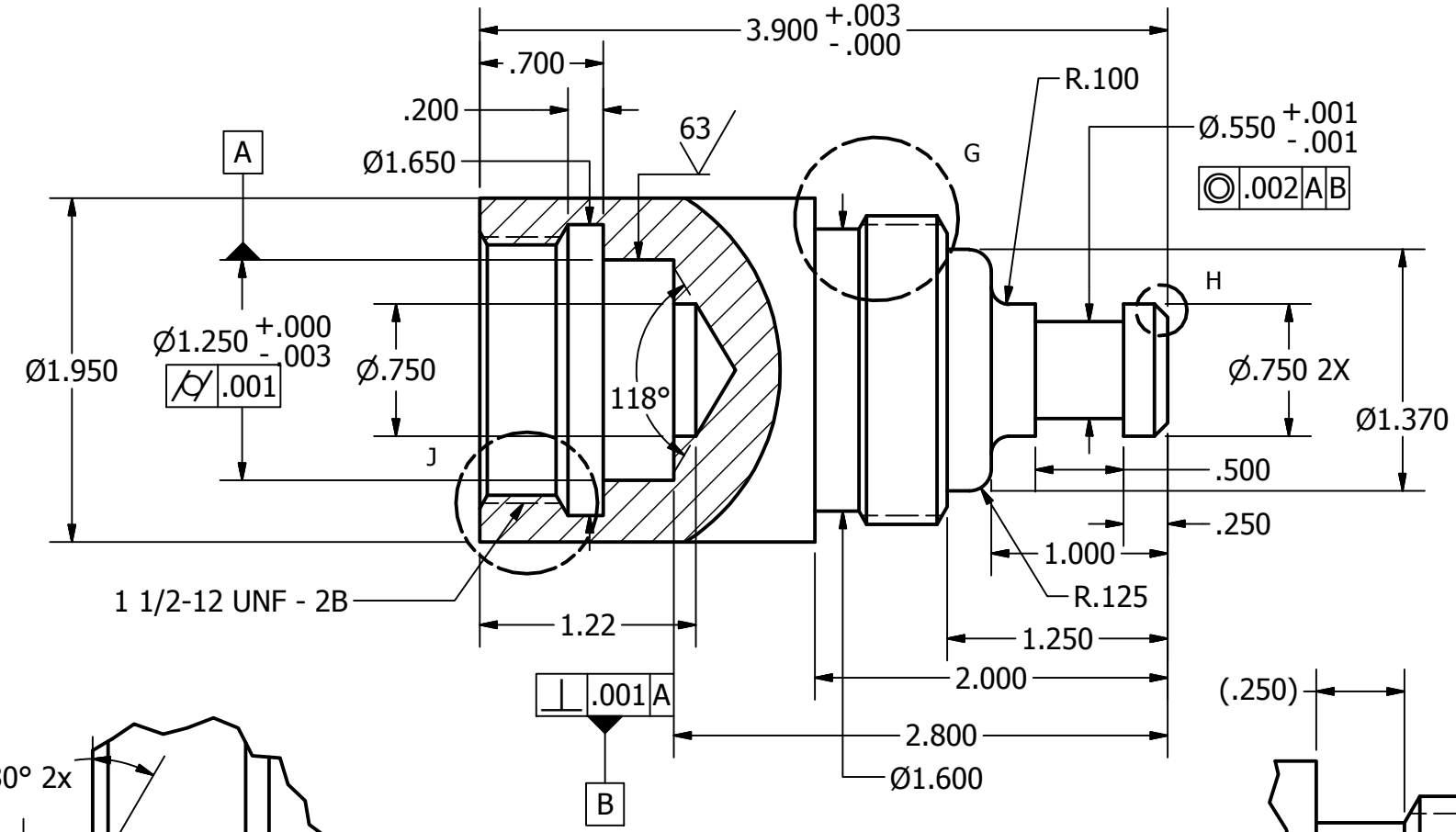

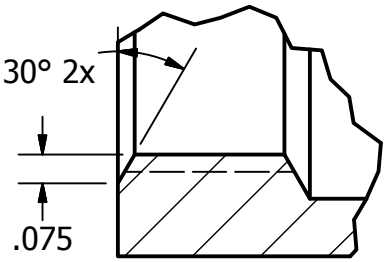

DETAIL J
SCALE 2 : 1

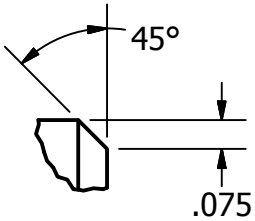

DETAIL H
SCALE 2 : 1

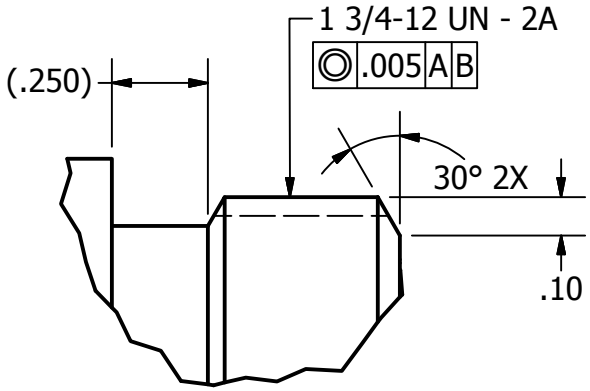

DETAIL G
SCALE 2 : 1

Notes:
1. Break all edges .015 max
2. All fillets .03 max
3. 125 RA max all over
4. All Surfaces must be machined
5. Unless otherwise specified, all coaxial diameters .010 A B

UNLESS OTHERWISE SPECIFIED: DIMENSIONS ARE IN INCHES TOLERANCES: FRACTIONAL ± .015 ANGULAR ± 1˚ TWO PLACE DECIMAL ± .010 THREE PLACE DECIMAL ± .005 FOUR PLACE DECIMAL ± .0005	INTEROPET GEOMETRIC TOL PER: ASME Y14.5M 1994 MATERIAL: 6061 ALUMINUM FINISH: SEE NOTES DO NOT SCALE DRAWING	TITLE 2015 SkillsUSA CNC Technician (Turning)

SIZE		DWG NO	REV
A		TTC2015	-
SCALE 1:1		SHEET 1 OF 1	

SkillsUSA
2015 Contest Projects

CNC Turning Specialist

Click the “Print this Section” button above to automatically print the specifications for this contest. Make sure your printer is turned on before pressing the button.

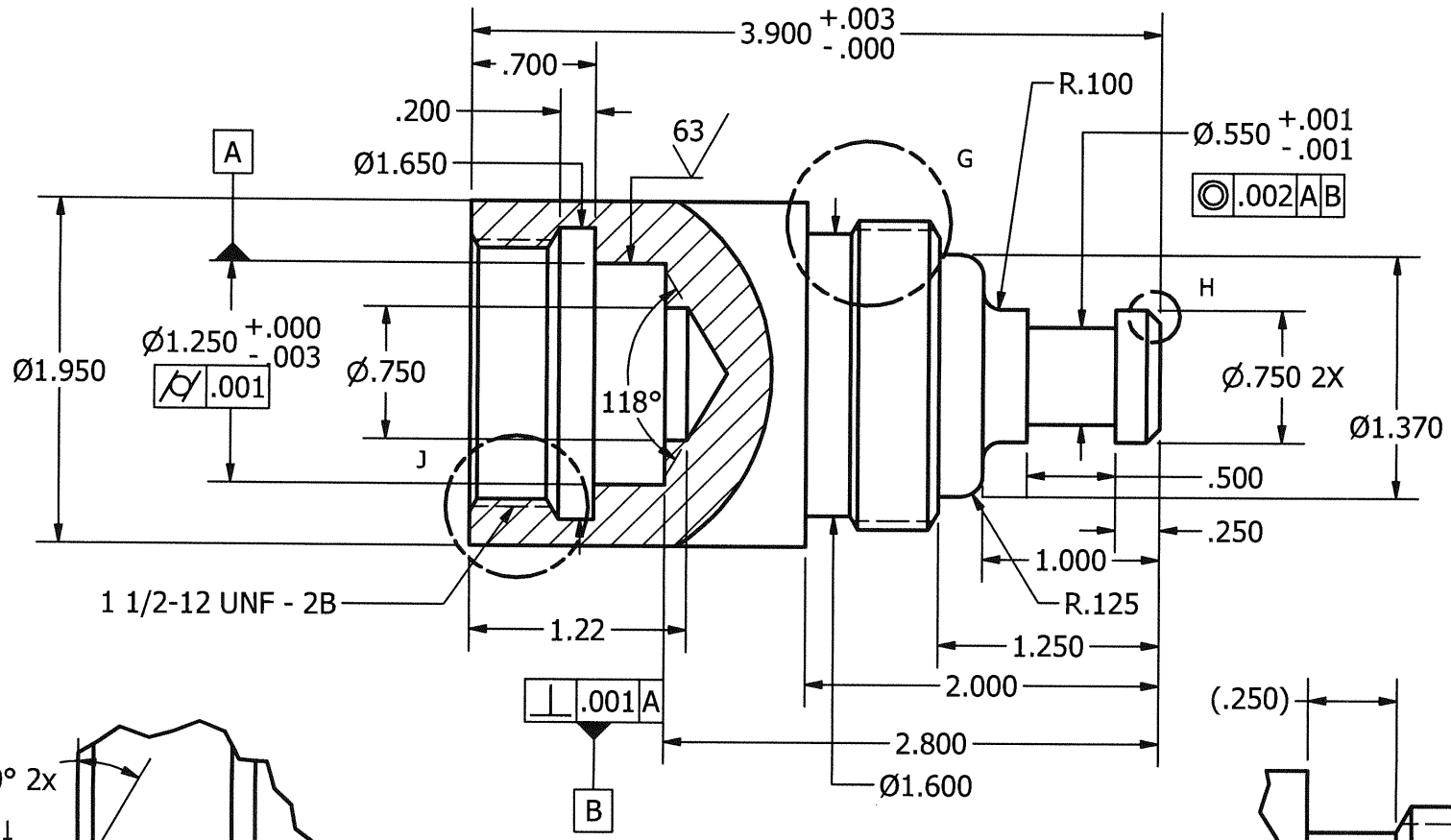

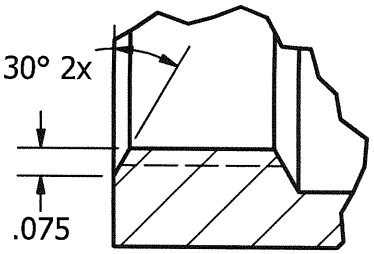

DETAIL J
SCALE 2 : 1

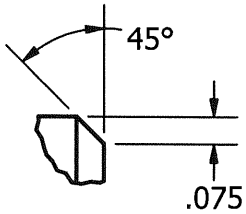

DETAIL H
SCALE 2 : 1

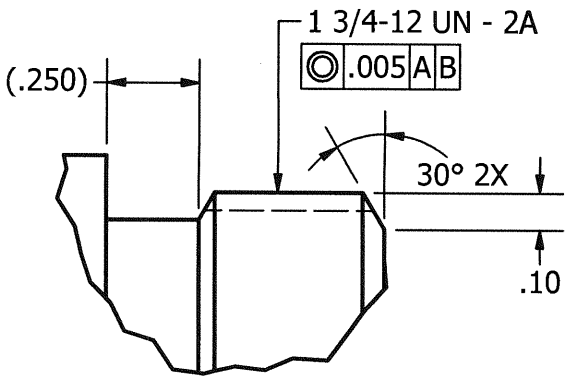

DETAIL G
SCALE 2 : 1

Notes:
1. Break all edges .015 max
2. All fillets .03 max
3. 125 RA max all over
4. All Surfaces must be machined
5. Unless otherwise specified, all coaxial diameters .010 A B

UNLESS OTHERWISE SPECIFIED: DIMENSIONS ARE IN INCHES TOLERANCES: FRACTIONAL ± .015 ANGULAR ± 1° TWO PLACE DECIMAL ± .010 THREE PLACE DECIMAL ± .005 FOUR PLACE DECIMAL ± .0005	INTERORET GEOMETRIC TOL PER: ASME Y14.5M 1994 MATERIAL: 6061 ALUMINUM FINISH: SEE NOTES DO NOT SCALE DRAWING	TITLE 2015 SkillsUSA CNC Technician (Turning)

SIZE		DWG NO	REV
A		TTC2015	-
SCALE 1:1		SHEET 1 OF 1	

SkillsUSA
2015 Contest Projects

Commercial Baking

Click the “Print this Section” button above to automatically print the specifications for this contest. Make sure your printer is turned on before pressing the button.

SkillsUSA
Commercial Baking Contest
June 22-26, 2015

Contestant's Orientation

Contents

Welcome Letter

Schedule

General Regulations for the Contest

About the Written Test

About the Performance Test

Judging Criteria and Photos

Tip sheet

Sample score sheet

Message to the Contestants:

Congratulations on your participation in this national competition and reaching this milestone in your baking career.

The 2015 SkillsUSA Championships represent the culmination of more than 10,000 contests held at local, district and state levels across the country. The nation's top 3,900 vocational-technical students are competing in more than 68 occupational contests this week.

For Commercial Baking in 2014, we hosted **66** students - **26** in the college division and **40** in the high school division. Like you, they are the local, regional or state baking contest champions. This provides you the rare privilege of testing your skill and knowledge with the best baking students in the United States. The real competition is with yourself - relax and do your best work. We know you are ready for the challenge.

The competition consists of two tests. The written test will evaluate your baking knowledge. Points are awarded based on the number of correct answers. The performance test will evaluate your baking skills. We will use judges, nearly all of whom are Certified Master Bakers (CMBs). There is more information about both tests in this package.

The Commercial Baking Competition is made possible by the generous donation of time, equipment, supplies and awards from more than 30 baking industry and educational sponsors - including Retail Bakers of America. The RBA, founded in 1918, represents 1,000 member companies who bring consumers quality bakery foods from bakery departments, independent bakeries, and foodservice facilities. In addition, RBA members include baking instructors, students, and suppliers of ingredients, equipment, and services

The Judges, members of the Education Committee and members of the Technical Committee have spent most of their lives in the baking industry. Our goal is to help you be successful and make this competition a positive experience so that you continue on as a successful baker. Regardless of what happens this week, you will leave Kansas City a changed person. You will be richer in experience and friendships. And, you will be better prepared for a bright future in retail baking.

Good luck to each of you.

Schedule for the Commercial Baking Competition

***COMMERCIAL BAKING**

Written Test: Tuesday, 1:00 p.m. – 2:00 p.m., Contest Area, North Wing
Orientation/Walk-through: Tuesday, 2:00 p.m. - 4:00 p.m., Contest Area, North Wing
Competition: College/Postsecondary, Wednesday, 8 a.m.–4 p.m., Contest Area, North Wing
Debriefing: College/Postsecondary, Wednesday, 4 p.m., Contest Area, North Wing
Competition: High School, Thursday, 8 a.m.- 4 p.m., Contest Area, North Wing
Debriefing: High School, Thursday, 4 p.m., Contest Area, North Wing

Overview of the Written Test

The written test will be given at the mandatory pre-contest meeting and consist of 100 multiple-choice questions. **Students will have 60 minutes to complete the test.**

The written test is the same test used for RBA's Certified Journey Baker (CJB) certification. If you pass this test, you will have completed the written test portion for certification. The passing score is 70%.

Overview of the Performance Test

Purpose
To evaluate each contestant's preparation for employment and to recognize outstanding students for excellence and professionalism in the commercial baking.

Scope of the Contest

1. The contest will be geared toward the commercial (retail) baking business rather than commercial restaurant business.

2. Contestants will be given a written test covering basic baking science and scheduled during a contestant meeting held before the practical contest.

3. The performance phase of this contest will be the actual preparation of goods and presentation of finished products ready for sale to customers.

4. Contestants will be given a predetermined selection of all necessary food items. Due to limited supplies, spoiled or burnt supplies will not be replaced.

5. No cell phones, computers, I phones or similar electronic devices will be allowed. Basic calculators are allowed for both the written test and the baking competition.

6. Contestants will prepare a total of seven products: six baked goods made from scratch and/or from fresh or frozen dough, and one iced and decorated cake. The products will be selected by the Commercial Baking Technical Committee from the following categories.

   One product each from the following categories: (total of 7)
   - Yeast Breads and Rolls
   - Quick Breads—(No Yeast)
   - Sweet Dough Products
   - Cookies
   - Basic Cake Decorating
   - Puff Pastry (Laminated Dough) or Pate a Choux Products
   - Pie and Pie Crust Pastry

Clothing Requirement
Contestants must wear the official SkillsUSA Championships clothing or work uniform specified for their particular contests during competition or be subject to a maximum penalty of 5 points (assessed by SkillsUSA). The commercial baking judges will also credit points for proper dress. All school marking must be covered.

Dress: White chef's shirt or coat, white work pants or checkered chef's pants (black and white checkers only) of the proper size (pants should not drag on floor), white SkillsUSA apron, white chef's hat (paper or cloth), and/or hairnet. A white chef's scarf is optional. No identification of contestant, school or state is allowed on official clothing. If you have a marked coat or shirt, please cover the marking.

The Commercial Baking contest will allow any reasonable hair covering excluding baseball caps. Chef/Baker hats are not mandatory but are recommended. Hairnets may be worn with hats to contain all loose hair.

Contestants with long hair that poses a possible safety or sanitary hazard must wear hair containment devices or hairnets. Contestants may be disqualified for lack of safe clothing or attire and possibly not allowed to participate. The orientation meeting would be the time to clarify any questionable attire or hair restraints.

Work shoes: white or black work shoes (closed leather upper, non-skid sole). No canvas, vinyl, plastic or leather athletic-type shoes, sandals or open-toed shoes are permitted in any SkillsUSA Championships event without penalty. The shoe must come up the heel. Contestants will be penalized where improper footwear constitutes a health or safety hazard.

Equipment and Materials

1. Supplied by the technical committee:
   a. All necessary equipment including mixers, sheet pans, all baking pans, speed racks, pastry cloths
   b. All food items
   c. All necessary information and furnishings for judges and technical committee
   d. No glass is allowed in the baking area

2. Supplied by the contestant:
   a. One pallet knife
   b. One hand whip
   c. One large kitchen spoon
   d. Three pastry bags tips and scissors
   e. One bowl scraper
   f. One dough knife
   g. One serrated knife
   h. One pastry wheel
   I. One bench brush
   j. One grease brush
   k. One pastry brush
   1. One rolling pin
   m. Three side towels
   n. One cleaning towel
   o. One set of nested mixing bowls (1, 2 and 3 qt.)
   p. Ruler
   q. Thermometer

r. Timer
s. Oven mitts or pan handlers
t. No other food items allowed (i.e. sprinkles, decorates, etc.)
u. A small (battery powered or spring) scale, 2 to 5 # capacity
v. Marker (ex: Sharpie) or pencil to mark all items (ballpoint pen does not work)
w. Gloves to handle ready to eat products

This list is a minimum. Contestants may bring more baking tools of their choosing. You do have a limited amount of work space and all of your equipment must remain in your space and well organized.

Procedures

Judges will rate each contestant independently and will not compare rating sheets.

The baking contest ends at 3:30 pm. This means ovens will be shut down. Products must be displayed by 3:45 pm - no product will be accepted on the table after 3:45 pm.

A 30 Minute lunch break is required by SkillsUSA. You may take this break anytime between 11:30 AM and 1 PM. You cannot leave the break area to work on baked goods during this 30 minute period.

Judges will speak to students or ask questions about their work or product. They will not help nor give advice or instructions.

General Skills

Students work will be observed throughout the day for the "General Skills" portion of the test. The "General Skills" evaluation sheet lists specific, observable performances for safety, sanitation and production efficiency. Judges will closely observe student's Production Efficiency and Use of Equipment/tools. In the area of efficiency they will pay close attention to waste. Are students correctly measuring ingredients to produce the right sized batch? Regardless of batch size, are students using all the dough as instructed? In the area of Equipment/tools Judges will pay close attention the proper and safe use of hand tools and mixers.

Judge's Scoring Criteria

General Skills Rating Scale:

Oral Professional Development Assessment

- The work area is organized
- Has a plan of work for the day
- Understands the products and is knowledgeable about how each must be prepared

Proper Uniform

- Uniform (shirts, pants, skirts, shoes, hat, towel etc) are clean and fit properly, pants not dragging on floor
- Wears head gear or other covering properly

Safety

- Keeps work area well-organized and free of hazards
- Follows safety requirements for operating equipment
- Works with a regard for safety of self and others
- Uses appropriate tools and equipment for baking function or product (mixer, hand tools etc.)

Sanitation

- Hands clean
- Washes hands correctly and at appropriate times during baking process
- Inspects tools and equipment before using – correctly cleans items
- Uses a clean side towel and replaces as needed during the day
- Avoids contaminating food
- Keeps floor area clean in work area

Production Efficiency

- Accurately measures ingredients
- Uses most or all raw ingredients – little or no wasted ingredients
- Uses most or all mixed ingredients - little or no wasted raw dough
- Properly bakes and finishes product –maximum sellable product is produced

Properly marks all products produced

- Student number is on all product made
- All pans that leave the work area marked with student number

Evaluating Products

There are five basic criteria used to judge products: external and internal appearance, taste, following directions and correct size. The product scoring sheets list the objective criteria associated with each. Judges are asked to pay close attention to proper proofing, proper bake, uniform/consistent shape and size, and specified finish weight (all are included in the five criteria) as they evaluate student's product.

Scratch Products

The "taste" criteria will be applied to the scratch bakery items only. This includes the bread, quick bread, cookies, and pie formulas. Some additional factors for these products are:

Breads:

There should be consistent size and weight with slightly rounded ends. The exterior crust should have a uniform thickness and overall golden brown color. There should be no sharp or irregular corners and unusual shapes or streaks. Sidewalls should be firm, and crust neither thick or thin.

Cookies:

Should have excellent top crevices and evidence of proper mixing, even color and uniform shape and size.

Muffins:

Muffins should have good volume, nice top crevices and tops that are not blown out. They should have even rounded sides and a nice crown. The inside should have good even cell structure with no tunnels.

Frozen Dough Products (Sweet Dough and Puff Pastry):
For the frozen dough items (sweet dough and puff pastry) we've eliminated the score for taste. We will be judging the products external appearance, the proper bake, the proper proof, creativity with the products made and if the basic instructions were followed. Other factors that will be considered are poor shapes, excessive flour dusting, unprepared fillings, over or under-baked and proofing the sweet dough properly. Even bake should be evident at the sides, center and where toppings meet the dough. The product should have an even gently rolling crown without indentations. The basic desired shape consists of symmetrical swirls to the center on uniform circular base. Good dispersion of cinnamon sugar, a light feel and even bake. For the coffee ring, Crust should have uniform thickness and be baked evenly. Excessive toppings may inhibit crust development.

Judge's Scoring Criteria for Puff Pastry

Use dough provided to prepare:
Minimum 6 cream horns and fill with whip topping
The test will involve making 3 different shapes with the dough provided

External Appearance

- Factors: Volume, form or shape, size, symmetry, structure, color, crust, thickness, character or feel, and even bake. For certain products, you may also consider: Weight, size, flakiness, over spring, structure, toppings, fillings, and glazes.

Internal Appearance

- Factors: Volume, symmetry, structure, color, grain, texture and even bake.

Salability

- Factors: Product quality, consistency, and presentation as a desirable consumer good.

Secondary Performance Test **Category: White Pan Bread**

Bread in Pan

Bread proofed in oven

Baked Bread

Finished loaf

Judge's Scoring Criteria for Bread

External Appearance

- Factors: Volume, form or shape, size, symmetry, structure, color, crust, thickness, character or feel, and even bake.

Internal Appearance

- Factors: Volume, break or shred, slice, symmetry, structure, color, grain or density, tunneling or holes, texture or feel.

Proper proof, size and weight

- Factors: Product quality, consistency, and correct size

Judge's Scoring Criteria for Sweet Dough

The dough is provided. Divide the dough in thirds to create three different products: Filled coffee cake ring, cinnamon sweet buns and sweet rolls – any shape.

External Appearance

- Factors: Volume, form or shape, size, symmetry, structure, color and even bake.

Internal Appearance

- Factors: Volume, break or shred, grain or density, tunneling or holes and texture

Proper proof and creativity

- Factors: presentation as a desirable consumer good.

Judge's Scoring Criteria for Cake Decorating

Icing Factors

- Symmetry – cake centered on board, final shape of cake, sides perpendicular to top, square and level cake
- Opacity (no window or crumbs)
- Enough/too much icing
- Evenness of slice
- Evenness of filling.

Design Factors:

- Borders – even and symmetrical
- Use of color
- Does design fit the cake (room for lettering, flower too big or small)
- Balance
- Use of flowers

Technique Factors:

- Borders – level of difficulty
- Correct hand pressure to make desired shapes
- Types of flowers – level of difficulty
- Lettering
- Execution of design
- Follow the directions on the cake order

2015 Commercial Baking Competition
Tip Sheet

BEFORE YOU BEGIN…

READ all your formulas through. Points are deducted for not following directions

ORGANIZE your workstation. Keep your table neat and safe

ORGANIZE your time, you will need the entire time allowed to complete this competition

PLAN and this has several steps

- Don't assume or necessarily work in the same order as the formulas presented in the workbook
- For each product, estimate the time needed to scale, mix, rest, bake, cook and finish
- Put it all together – what will you work on, in what order, at what time

Pay attention at Orientation – get a sense of where everything is located. Ask questions…that's the time to get your questions answered

ONCE YOU START….

MARK your product, sheet pans etc. everything that leaves your table, with your ID number

WRITE a note - use your timers - do whatever it takes to avoid these common mistakes –
Leaving products in the oven too long
Letting products over proof
Forgetting to display products

Watch your oven temperatures…make sure you are baking at the right temp

Check and double check your ingredients……Is it sugar **OR** is it salt?

CAKES are easier to decorate when they are frozen

Always CHECK and start mixers at what level? - #1

Make sure you **mark** your product to make sure no one takes your product. Do not take anyone else's product.

Daily Production Sheet

Product	**Quantity**	**Notes**	
Bread			
- Pan loaves			
- Baguettes			
Nut bread			
Muffins			
Coffee Ring			
Cinnamon sweet rolls			
Sweet Rolls			
Cookies			
- Sugar Cookies			
- Butter Tea Cookies			
Cream Horns			
Fruit-filled pastries			
Éclairs			
Pie			
- Pineapple			
- Pecan			

Sample Score Sheet

Candidate #:	Judge:

Product: **(1) Bread**

Rating Scale: From 20 (Excellent) to 1 (Poor)

External Appearance	

- Factors: Volume, form or shape, symmetry, structure

Proper bake	

- Factors: correct crust color and even bake, bottom color correct

Internal Appearance	

- Factors: Volume, break or shred, slice, symmetry, structure, color,

Proper proof	

- Factors: grain or density, tunneling or holes, texture or feel, size

Taste	

- Factors: Aroma, flavor, mouth feel, after-taste, character, palatable, texture, favorable, moist or dry, and freshness.

Proper size and weight	

- Factors: proper length and weight with-in 2 oz over and no underweight

Total	

Commercial Baking

Secondary Check-In

Number	Written Test	Orientation	Test Day	Time Out – Lunch	Time In - Lunch
101					
102					
103					
104					
105					
106					
107					
108					
109					
110					
111					
112					
113					
114					
115					
116					
117					
118					
119					
120					
121					
122					
123					
124					
125					
126					
127					
128					
129					
130					
131					
132					
133					
134					
135					
136					
137					
138					
139					
140					

Commercial Baking

Post-Secondary Check-In

Number	Written Test	Orientation	Test Day	Time Out – Lunch	Time In - Lunch
501					
502					
503					
504					
505					
506					
507					
508					
509					
510					
511					
512					
513					
514					
515					
516					
517					
518					
519					
520					
521					
522					
523					
524					
525					
526					
527					
528					
529					
530					
531					
532					
533					
534					
535					
536					
537					
538					
539					
540					

Bakery Formulas

For the

SkillsUSA
Commercial Baking Contest

Secondary Division

For Distribution
2015

The Test

Contestants will prepare a total of seven products selected by the Commercial Baking Technical Committee from the following categories

Standard	The 2015 Test
Yeast Breads and Rolls	1. White Pan Bread
Quick Breads—(No Yeast)	2. Pumpkin bread
Sweet Dough Products	3. Sweet Dough Variations
Cookies	4. Sugar Cookies
Basic Cake Decorating	5. Decorate Cake
Puff Pastry (Laminated Dough)	6. Puff Pastry Variations
Pie and Pie Crust Pastry	7. Pineapple Pie

1. White Pan Bread

Source*: RBA*

Raw material	LB	OZ	Bakers %	Instructions
Yeast		2	2.5	Mix with 6 oz of water, set aside
Water	3	4	64	Variable
Bread Flour	5		100	
Salt		1.8	2.25	
Sugar, granulated		4	5	
Milk powder		4	5.0	
Shortening, all purpose		2.5	3	
TOTAL	**9**	**2.5**		

1. Dough temperature: Between 75 and 80 degrees. (Watch your temperatures). Allow dough to rise, dough should double in size.

2. Cut into proper size pieces, round the piece of dough up and let rest. DO NOT USE PROOF BOX –Keep dough at room temperature, covered.

3. Make Up:
   - 2 pan loaves, scale 12 oz to achieve finished weight of 10-11 oz.
   - 2 three-braided loaves – scale to 18 oz – finished weight 16 oz
   - With remaining dough prepare one baking sheet of single knot rolls.

4. Proof to proper size.

5. Wrap excess dough and leave on your rolling rack.

6. Bake: 400 degrees.

Display: One standard loaf, one braided loaf, and three knot rolls.

2. Pumpkin Bread
Source: Baking Fundamentals, Noble Masi

Raw Material	LB	OZ	Baker's %	Instructions
Pumpkin, canned		14	100	Combine the pumpkin with the sugar, eggs, baking soda, salt and spices
eggs		6	43	
Sugar	1	2	128	
Baking soda		1/8	1	
salt		1/4	2	
Ground cloves		1/8	1	
Ground cinnamon		1/8	1	
Bread flour		14	100	Just blend together, avoid over mixing.
Baking powder		1/4	2	
Vegetable oil		6	43	
raisins		8	57	Add water and raisin. Blend together
water		6	43	
Total	**4**	**9**		

Procedure
Combine first 7 ingredients and mix with paddle for approx. 5 minutes

Gradually add oil, flour and baking powder

Add water and raisins

Pour into loaf pans provided to make proper size loaf

Bake at 375 degrees

3. Sweet Dough

The dough is provided: 2 lb 8 oz. (40 oz).

Prepare the following:

- 2 Filled Coffee Cake Ring use 10oz dough for each one
- Cinnamon Sweet Rolls (use all remaining dough; focus on uniformity of shape and weight). Bake in straight sided aluminum pans.

1. Proof finished products.

2. Bake: 375 degrees

3. Finish with premade icing provided.

*see attached page for different Danish designs

4. Sugar Cookies
Source*: RBA*

Raw Ingredients	LB	OZ	Baker's %	Instructions
Sugar		8	50	Cream ingredients to soft mix
Salt		0.16	.8	
Butter		6	37.5	
Eggs, whole		4	25	Add eggs in two stages and cream in.
Milk, liquid		2	12.5	Add milk and vanilla and stir slightly
Vanilla		0.25	.25	
Cake Flour	1		100	Sift flour and baking powder together, add and fold lightly.
Baking Powder		0.6	3	
TOTAL	**2**	**5**		

1. Roll dough to approximately ¼-inch thickness on canvas lightly dusted with flour.
2. Use parchment-lined baking sheets.
3. Cut out at least 2 dozen cookies, assorted shapes (round, heart, crescent, diamond).
4. Wash with milk and sprinkle with granulated sugar.
5. Bake in 375 degrees F oven. *DO NOT OVERBAK*E.
6. Display 6 cookies.
7. (Wrap left over dough and leave on your rack.) **LEAVE REMAINING COOKIES ON PAN FOR DISPLAY/JUDGING.**

5. Cake Decorating

Source*: RBA*

Each student is provided two 8” round cake and white icing.

This is your cake order.

Test Problem

Customer Name: Ms. Sarah Jones **Phone:** 800-638-0924

Day Wanted: Tuesday

Date Wanted: 6/27/13

Time Wanted: 4:00PM

Size: 8” rounds, split and filled with red jelly filling. Fillings are provided.

Icing: Use icing provided

Colors: Yellow roses, green leaves

Flower Type: Spray of roses- 3 to 5

Inscription: Happy Birthday Vickie

Special instructions:

1. Scale no more than 2 lbs of whip topping. Use whipped topping for icing the cake.
2. Prepare colors and bags. Use butter cream icing provided for roses.
3. Pipe white border of your choosing.
4. Do not comb sides.

6. Puff Pastry

Have dough come to room temperature

Use the dough provided to prepare the following products:

Make four (4) fruit-filled pastries, 4 cream horns, and 4 of a shape of your choosing to yield 12 total. (Not to exceed 4 oz. each). Add fruit filling after baking and finish pastries with icing that is provided. Fill cream horns with whip topping.

Rest for 30 minutes before baking.

. Bake: 400F degrees.

Display one piece of each shape/variety.

7. Pineapple Pie

Source*: Baking Fundamentals © 2007,* modified 2008 by Noble Masi, CMB

Dough

Raw Material	**LB**	**OZ**	**Baker's %**	**Instruction**
Pastry Flour	1		100	Prepare by hand.
Shortening, all purpose		10	60	Rub shortening and flour until dough forms small pieces
Salt		0.30	1.87	Dissolve ingredients in water. Add to the above and fold over lightly until the liquid is absorbed.
Water (cold)		7	40	
TOTAL	**2**	**1 1/2**		

Filling

Canned pineapples- drained		12		place pineapple, sugar and 2 oz. water in sauce pan, and bring to a boil
Sugar		6		
Water		4		
Corn starch		1		Use 2 oz water to make slurry
				add slurry to boiling pineapple (let liquid return to a boil)
				let cool before placing in pie shell
TOTAL	**1**	**7**		

1. Rest dough for half hour minimum.

2. Prepare enough for one double crust pie and one unbaked 8-inch pie shell. Use the 8" pie pans, *not the straight sided pans*. Scale 5 to 7 oz for each top and bottom. You should have a little dough left over.

3. Fill one pie and top the pie with a pie crust (double crust or lattice top)

4. Sprinkle with sugar.

5. Bake pie at 400 F until golden brown.

6. Do not bake the second, unfilled pie shell. However, finish and flute the edges for display.

Display Checklist:

Yeast Bread
□ 1 pan loaf
□ 1 braided loaf
□ 3 knot rolls

Quick Bread
□ 2 pumpkin bread

Sweet Dough
□ 2 coffee cake rings
□ 2 cinnamon sweet rolls

Cookies
□ 6 sugar cookies

Basic Cake Decorating
□ 1 decorated cake

Puff Pastry
□ 2 cream horns
□ 2 fruit-filled
□ 2 any shape

Pie and Pie Crust Pastry
□ 1 pineapple pie
□ 1 unbaked pie shell

Bakery Formulas

For the

SkillsUSA
Commercial Baking Contest

Postsecondary Division

For Distribution
2015

The Test

Contestants will prepare a total of seven products selected by the Commercial Baking Technical Committee from the following categories.

Standard	The 2015 Test
Yeast Breads and Rolls	1. Basic French Bread
Quick bread—(No Yeast)	2. Blueberry Muffins
Sweet Dough Product	3. Sweet Dough Variations
Cookies	4. Butter Tea Cookie
Basic Cake Decorating	5. Decorate Quarter Cake
Pate a Choux Products	6. Éclair Pastry
Pie and Pie Crust Pastry	7. Apple Pie

1. Basic French Bread Dough

Source: RBA formula database, (858 -Power) 2000.

Raw Ingredients	LB	OZ	Baker's %	Instructions
Bread Flour (high gluten)	3	8	100	Use straight dough method.
Salt		1.25	2	
Yeast, compressed		2.0	4	
Water	2	4	64	variable
TOTAL	**5**	**15.25**		

1. Dough temperature should be 75 to 80 degrees.
2. Bulk ferment on the bench, depending of dough temperature and room conditions. Allow dough to double in size.
3. Cut dough into appropriate size pieces and let rest.
4. Make six traditional baguettes with a finished weight of 11 oz each. Judges will accept 2 oz overweight on the finished bread. Underweight will be penalized points.
5. Length should be 16"-18"
6. With left over dough make creative loaf.
7. Proof
8. Slash bread with 7 diagonal (seven) cuts
9. Bake: 425 degrees.

2. Blueberry Muffins (Quick bread)

Source: Commercial Baking Contest 1996, revised 2001 based on Professional Baking, Gisslen.

Raw Ingredients	LB	OZ	Baker's %	½ Batch Reformation	Instructions
Sugar, granulated		12	30		Cream ingredients
Shortening, all purpose		12	30		
Salt		0.5	1		
Vanilla		0.5	1		
Eggs whole, beaten		8	20		Add eggs and cream.
Pastry Flour	2	8	100		Sift together dry ingredients. This may be done ahead of time and set aside before adding liquid.
Baking Powder		2.5	6		
Milk, liquid	2		80		Add flour and milk to the creamed ingredient in stage
TOTAL	**6**	**11**			
Blueberries		10	25		Fold into batter and bake immediately.

Procedure

1. Assure pans are ready before mixing. You may either use pan liners or grease them.

2. Once the wet and dry ingredients are mixed you must pan up one dozen and bake immediately.

3. Blueberries should be well drained or, if frozen, kept frozen until batter is ready for the addition of the berries. Berries should be added quickly and immediately panned out.

4. Fill tins 1/2 to 2/3 full.

5. Bake at 400-degree F.

3. Sweet Dough

Commercial Baking Contest 1995, revised 2000.

The dough is provided: 2 lb 8 oz. (40 oz).
Use about a 1/3 of the dough for each product listed below:

- Filled Coffee Cake Ring –13 oz- Total weight
- Cinnamon Sweet buns – 13 oz-Total weight
- Sweet Rolls – any shape – 13 oz-Total weight

Underweight will be penalized points.

Use all dough. Focus on uniform shape and weight.

1. Proof product to the right size
2. Bake: 375 degrees.
3. Finish with icing provided
4. Do not use red fillings on the pastry cloths

4. Butter Tea Cookie

Source: Commercial Baking Contest 1992, revised 1998, revised 2001 based on Professional Baking, Gisslen.

Raw Ingredients	LB	OZ	Baker's %	Instructions
Butter		11	33	Creaming method.
Shortening, all purpose		11	33	
Sugar, granulated		11	33	
Sugar, 6X (powdered)		6	18	
Eggs, whole		8.25	25	Cream light and fluffy.
Vanilla		.3	1	
Cake Flour	2	1	100	Sift then blend in flour.

Procedure

1. Bag cookies using plain tube or star tube.

2. Make cookies small - about size of quarter, make one sheet pan.

3. Cookies are to be plain and not decorated.

4. Bag onto parchment lined pan. Make only one sheet of cookies.
   Left over dough must be wrapped and placed on rack.

5. Bake at 375F.

5. Cake Decorating

Source: Commercial Baking Contest, revised 1998.

The Bakery Cake Order Form

Customer Name: Ms. Sarah Jones **Phone:** 800-638-0924

Day Wanted: Monday

Date Wanted: 6/26/13

Time Wanted: 4:00PM

Size: quarter sheet

Icing: Use icing provided

Colors: white icing, red roses, green leaves

Flower Type: spray of roses – 3 to 5

Inscription: Happy Birthday Tina

Special instructions:

1. Scale no more than 2 lbs of icing provided.
2. Use butter cream for flowers and writing.
3. Piped border of your choosing.
4. Do not comb sides.

6. Éclair Cream Puff

Sources: Commercial Baking Contest RBA

Raw Ingredients	LB	OZ	Bakers %	Instructions
Water	2		133	Combine the liquid, shortening, salt sugar in a heavy saucepan or kettle. Bring the mixture to a full, rolling boil
Shortening, all purpose	1		67	
Salt		0.75	3	
Sugar, granulated		0.75	3	
Bread Flour	1	8	100	Remove from heat and add the flour all at once. Stir quickly. Return to moderate heat, stir vigorously until the dough forms a ball and pulls away from the sides of the pan. Cook thoroughly. Transfer the dough to the bowl of a mixer. With the paddle attachment, mix at low speed until the dough has cooled slightly. It should be about 140 degrees F (60 degrees C), which is still very warm, but not too hot to touch.
Eggs, whole/fresh	1	8	100	At medium speed, beat in the eggs a little at a time. Wait until they are completely absorbed before adding more. Mix until blended. The paste is ready to use.
TOTAL	**6**	**1.5**		

Procedure:

1. Line sheet pans with silicone paper.
2. Pipe out éclairs 4-5” long, cream puffs approximately 3” round.
3. Bake at 400 F degrees for about 30 minutes. Do not under bake. Remove them from the oven and let cool slowly in a warm place.
4. When cool, fill with cream filling (based on available materials) using a pastry bag with a star tube. Dust with confectioners’ sugar.

7. Apple Pie

Source: ND State College of Science

Dough

Raw Material	LB	OZ	Baker's %	Instruction
Pastry Flour	1		100	Prepare by hand.
Shortening, all purpose		10	60	Rub shortening and flour until dough forms small pieces
Salt		0.30	1.87	Dissolve ingredients in water. Add to the above and fold over lightly until the liquid is absorbed.
Water (cold)		7	40	
TOTAL	**2**	**1 1/2**		

Filling

IQF Apples Sugar Butter	2	 3 1		Sauté apples lightly in the first quantity of butter. Add the first quantity of sugar as the apples cook
Water Corn Starch		2 3/4		Mix water and starch until smooth. Add starch mixture to apples and boil until thick and clear.
Sugar Salt Cinnamon Nutmeg Lemon Juice Butter		3.5 .06 .06 .02 .33 .25	 (1/4 tsp) (1 tsp) (1/4 tsp) (2 tsp)	Remove from heat and add remaining ingredients. Stir gently until sugar is dissolved and butter is melted. Let cool before placing in pie shell.
TOTAL	**2**	**11**		

1. Rest dough for half hour minimum.

2. Prepare enough for one double crust pie and one unbaked 9-inch pie shell. Use the 9" pie pans, *not the straight sided pans*. Scale 7 to 9 oz. for each top and bottom. You should have a little dough left over.

3. Fill one pie and top the pie with a pie crust (double crust or lattice top)

4. Sprinkle with sugar.

5. Bake pie at 400 F until golden brown.

6. Do not bake the second, unfilled pie shell. However, finish and flute the edges for display.

Display Checklist:

Yeast Bread
□ 3 baguettes
□ 1 creative loaf

Quick Bread
□ 4 blueberry muffins

Sweet Dough
□ 1 coffee ring
□ 2 cinnamon sweet buns
□ 2 sweet rolls, any shape

Cookies
□ 12 butter tea cookies

Basic Cake Decorating
□ 1 decorated cake

Puff Pastry
□ 3 éclairs (1 unfilled)
□ 3 cream puffs (1 unfilled)

Pie and Pie Crust Pastry
□ 1 apple pie
□ 1 unbaked pie shell

SkillsUSA
2015 Contest Projects

Computer Programming

Click the “Print this Section” button above to automatically print the specifications for this contest. Make sure your printer is turned on before pressing the button.

2015
National
SkillsUSA

Computer Information Systems

Programming Competition
Contestant Packet

Louisville, KY

June 25, 2015

National Contest Program #1

Food Program

You will write a program to create a screen which will allow the user to enter quantities of items to purchase from your food truck. Taxes are included in the price. You must have a running total of all sales for the day.

Item for sale: Hot Dog $2.50

Brat $3.50

Hamburger $5.00

Fries $2.00

Soda $2.00

Water Free

Buttons or choices will include:

Calculate

Clear (allows for another entry, reset to another amount)

Exit

All screens will be clearly labeled with contestant number, program number and title.

All boxes will be clearly labeled.

When you have completed this program put your number and time on the sheet for the first program, the judge will take you in turn for execution of your program to check for correct output. When approved, print out your source code. Clearly mark with your assigned contestant number and hand in to the judges table. Go on to the next program.

National Contest Program #2

Grade Program

You will write a program to create a screen which will allow for the entry of grades for 5 different classes. Each class will keep track of the grades with an average grade to be shown when selected. Output will also include high score and low score for each class. Additionally scores of .5 will be rounded up to the next whole number for the average score. Example a score of 89.5 will be 90 on the final average.

Classes: Programming, Art, Science, Math, and History.

Output will include:

Class Name

Scores Entered

Current Average

High Score

Low Score

Buttons or choices will include:

Calculate

Clear (allows for another entry, reset to another amount)

Exit

All screens will be clearly labeled with contestant number, program number and title.

All boxes will be clearly labeled.

When you have completed this program put your number and time on the sheet for the second program, the judge will take you in turn for execution of your program to check for correct output. When approved, print out your source code. Clearly mark with your assigned contestant number and hand in to the judges table. Do not leave the area until both of your programs have been demonstrated to the judges.

SkillsUSA
2015 Contest Projects

Culinary Arts
(High School)

SkillsUSA

National Culinary Arts Contest High School June 25, 2015 Louisville, Kentucky

SkillsUSA
High School Culinary Arts Contest
June 25, 2015

MENU

Composed Salad with Emulsified Dressing

Clear Soup

Sautéed Chicken with Mushroom Pan Sauce
Brown Rice Pilaf
Green Vegetable and Julienne Carrots

Braised Chicken
Roasted Potatoes
Braised Vegetables

High School Judging Categories

A. Sanitation & Mise en Place

1. There will be a minimum of four floor judges that will evaluate
   i. Sanitation procedures
   ii. Basic organization/ cleanliness/ attitude
   iii. Safety

B. Skills Components:

1. Vegetable Cuts – may include any of the following:
   i. Mince, Chop, Brunoise, Julienne, Bâtonnet, Dice (all sizes), Concassée, Chiffonade
2. Meat Fabrication – Including but not limited to:
   i. Chicken, Fish Fillet
3. Chicken Broth or Stock
4. Handling/cleaning of salad greens
5. Emulsion Dressing
6. Soup– may include any of the following:
   i. Cream, Puree, Clear
7. Main entrees - 2 different cooking techniques from the following:
   i. Sauté, Roast, Braise, Stew, Poach (shallow or deep), Panfry,
7. Sauces – 2 different types from the following:
   i. Cream, Pan Sauce, Au Jus, Gravy, Butter Sauce, Warm Vinaigrette, reduction.
8. Vegetable Cookery – may include any of the following:
   ii. Boiling, Steaming, Glazing, Sauté, Roasting, Pan Frying, braising, stewing
9. Starch Cookery – may include any of the following:
   iii. Rice- Pilaf, Risotto; Potatoes- Roasted, Pureed, Pan fry, Boiled, Steamed; legumes

C. Written Test

The NOCTI test gives the student an opportunity to demonstrate their knowledge of culinary principles including but not limited to : Culinary Math, Sanitation, Safety, Techniques and principles of cooking.

Skills USA National Culinary Arts Competition Scoring Breakdown

High school and Post Secondary

Total Possible Points: 1000

Category	Value
Written Test (NOCI)	100
Sanitation	200
Mise en Place	100
Knife Skills/ Meat Fabrication	100
Technical Skills/ Taste	500
Total	1000

Tie Breaker: In the event of a tie, the competitor with the highest overall technical skills/ tasting score will be determined to be the winner. If there is still a tie, the competitor with the highest score on the written test will be determined to be the winner.

Deductions:

Poor/ no clean-up and reset of station and overall contest area…….....10-50 points

From Skills USA – Uniform infraction……..10-50 points

No Resume'…….50 points

GENERAL INSTRUCTIONS/ TIPS

- During Orientation for the Contest, a member of the Technical Committee will review the contest packet with you.

- Before the Contest, carefully study the contest packet:
  - ✓ **Review** the list of available spices, herbs and ingredients in contest packet.
  - ✓ **Write** a Food List and a Preparation and Cooking Schedule designed to be ready during the specific service times identified in your packet.

- Please use only as much of each ingredient as is necessary. Return unused portions to the supply tables.

- Contact a judge to look at your garbage before removing anything from your station

- You may work on any component of your menu at any time. ie: You can begin working on your stock and/or soup during your knife cut time.

- You will present one (1) tasting plate to the Tasting Judges and one (1) presentation plate for the public to see

- Raise your hand and ask for assistance if there is anything that you do not understand. – There will be a period just before the start of the first session when all questions will be answered for all contestants to hear. Once the competition starts, any questions about technique or definitions, etc will not be answered – Questions about where to find ingredients and the like will be answered.

- Remember two things – This is about LEARNING and it should be FUN. If at any time you feel overwhelmed and feel that you can not continue, speak to a judge or member of the Technical committee. We are here for you!

Competition Schedule

8:00 am Contestants Meet in competition area

8:10 Every contestant has from 8:10 until 8:25 to set their station. No one will be allowed to their station after 8:25 until their scheduled start time

8:25 Open question and answer with Technical Committee Chair – ALL questions will be answered – everyone will be able to hear the questions and the answers. If a contestant is late and misses this session, the questions will not be repeated or re-answered.

8:45 Competition starts – Competitors will start in groups of 6-8, staggered in 15 minute intervals – The chart below shows each competitors schedule

JUDGING SCHEDULE

Contestant #	Group 1	Group 2	Group 3	Group 4	Group 5	Group 6
Judging Time						
Start	8:45	9:00	9:15	9:30	9:45	10:00
Meat Fabrication	9:15	9:30	9:45	10:00	10:15	10:30
Knife Cuts	10:15	10:30	10:45	11:00	11:15	11:30
Salad	10:45	11:00	11:15	11:30	11:45	12:00
Lunch	11:15	11:30	11:45	12:00	12:15	12:30
Soup	12:30	12:45	1:00	1:15	1:30	1:45
Entrée #1	1:00	1:15	1:30	1:45	2:00	2:15
Entrée #2	1:30	1:45	2:00	2:15	2:30	2:45
Clean up	2:00	2:15	2:30	2:45	3:00	3:15

Note: Chicken Fabrication and knife cuts will be judged at your station.
For all other courses, the contestant will present one plate to the judges and one plate will go on the presentation table for the public.

A 30 minute lunch period is MANDATORY for all competitors. During this time, you are NOT allowed to go to your station for any reason including temperature adjustment.

Contest Time Line

- Please be aware of the time frame for presentation of all items.
- The window for presenting is 5 minutes long. For example, contestants 1-8 have between 10:15 AM and 10:20 AM to present their knife cuts without penalty.
- Any items presented between 5-10 minutes late will result in a 25 % point loss for that item.
- Any items presented between 10-15 minutes late will result in a 75 % point loss for that item.
- Any items presented 15 minutes late will not be scored.
- Chicken Fabrication and knife cuts will be judged at your station
- On all other courses, the contestant will present one plate to the judges and one plate will go on the presentation table for the public.

ALL FOOD PREPARATION AND PRESENTATION MUST BE COMPLETED BY 3:15pm

3:45pm Judges Critique (approx. 45 minutes) Room to be announced

SKILLS COMPONENT(SECONDARY):
Chicken Fabrication

Each contestant will have 1 chicken to fabricate. They should execute the following:

1. Two breasts – The breast should be skin on and boneless, except for the first bone of the wing which should be attached. The tender should be intact and attached to the breast. The wing bone, tender and skin can be removed at a later time if desired.
2. Two leg/thigh portions – the leg and thigh should be bone-in
3. Carcass meat, trim and bones are to be used for stock and soup.

SKILLS COMPONENT(SECONDARY):
VEGETABLE CUTS

Prepare the following vegetable cuts and/or tasks and present for judging. These items will be used in other menu items:

1. **Oblique –** 3 oz. Use vegetables based on your menu
2. **Chopped Parsley –** ¼ Bunch
3. **Tomato Concasse –**1 roma tomato
4. **Minced** ½ onion
   ½ head garlic
5. **Medium Dice (1/2 ” x 1/2” x 1/2” cube)-** 1 cup. Use vegetables based on your menu.
6. **Julienne (1/8x1/8 x1 ½ to 2inches)** Carrots -3 oz. prepared weight required.

RECIPES

Stock:
Skill component: Stock
Yield: 2-3 qt
Chicken bones, trim from your fabricated chicken
Water
Mirepoix
Sachet
Use as needed throughout the competition.

Chicken Vegetable Soup
Skill component: Stock/Clear Soup
Yield: 1 to 1-1/2 Qts
Ingredients:

Trim from chicken	
Vegetable oil	1 tsp.
Cut vegetables for garnish	Approx. 1-1.2 cup
Seasoning	TT

1. In a 2-3 qt sauce or stock pot, sweat vegetables in a small amount of vegetable oil. Add the vegetables in increments according to cooking time.
2. Strain stock as needed, reserving meat, on top of cooked vegetables. Save the rest of the stock to use in other menu items
3. Clean up all of the cooked chicken meat and cut or shred it as it should be added to the soup as a garnish.
4. Add additional garnish as desired

COMPOSED SALAD WITH EMULSION DRESSING
Contestants' choice
Skill Component: Cleaning-handling of greens/ Permanent Emulsion
Yield: 2 servings

<u>Guidelines for the composed salad:</u>

- **Use extra white meat chicken, (i.e. tenderloins, wings) to prepare a protein component for the salad. Examples may be: breaded and pan-fried, grilled, chicken salad etc.**
- **A permanent emulsion dressing is required.**
- **Three room temperature or chilled vegetable garnishes are required. They may be raw or cooked. One must be the tomato concasse prepared in the knife cut segment.**
- **Properly cleaned lettuce or greens are required.**
- **A crisp component is required. Examples may include a crostini, potato crisp, or cheese crisp.**

SAUTEÉD CHICKEN BREAST WITH MUSHROOM PAN SAUCE
Skill Component: Sauté with pan sauce
Yield: 2 plates

Properly sauté appropriate pieces of chicken. Prepare mushroom pan sauce from fond.

Plate chicken with sauce, rice pilaf, green vegetable and glazed carrot.

STARCH ACCOMPANIMENTS FOR SAUTEÉD ENTRÉE
Skill Component: Brown Rice Pilaf
Yield: 2 portions

Typical ingredients for Rice Pilaf
Fat (butter, oil)
Onion, minced
Brown rice
Chicken stock or broth
Butter
Salt and pepper

VEGETABLE ACCOMPANIMENTS FOR SAUTEÉD ENTRÉE
Skill Component: Green Vegetable Cookery
Yield: 2 servings
Ingredients:

Green Vegetable of choice (Cut as desired and/or practical)	
Seasonings – your selection from contest supplies	as desired
Fresh herbs – your selection from contest supplies	as desired

Instructions:

- Using proper cooking technique for vegetables, prepare a sufficient amount for two (2) portions.

For creative variation, you may utilize additional herbs and seasonings from the contest supplies at your discretion

Skill Component: Sauteed Vegetables
Yield: 2 portions
Ingredients:

Julienne Carrots	From knife cuts
Seasonings – your selection from contest supplies	as desired
Fresh herbs – your selection from contest supplies	as desired

Instructions:

- Using proper cooking technique for vegetables, prepare a sufficient amount for two (2) portions.

Braised Chicken Thighs
Skill Component: Braising
Yield: 2 Servings

Properly braise the appropriate chicken pieces. Plate two portions accompanied with roasted potatoes and braised vegetables.

STARCH ACCOMPANIMENTS FOR POACHED ENTRÉE
PARSLIED POTATOES
Skill Component: Roast
Yield: 2 Servings

Properly roast potatoes to accompany braised entree

VEGETABLE ACCOMPANIMENT FOR BRAISED ENTRÉE
BRAISED VEGETABLES
Skill Component: Braising

Properly braise appropriate vegetables from knife cuts to accompany braised entree

For creative variation, you may utilize additional herbs and seasonings from the contest supplies at your discretion

SkillsUSA
2015 Contest Projects

Culinary Arts
(College/Postsecondary)

SkillsUSA

National Culinary Arts Contest

Post Secondary
June 24, 2015
Louisville, Kentucky

The Post Secondary Culinary Arts Competition will be in a Market Basket format.

1. **Competitors will receive a market basket with various proteins, vegetables, fruits, and starches the day before the competition.**
2. **They will also have a community storeroom that they can use as much or as little product from as they would like.**
3. **The competitors will write a menu that includes a salad, a soup, and two entrees of their own choosing.**
4. **They must use at a noticeable amount of each item in their market basket within their menu.**
5. **They can supplement those ingredients with items from the community storeroom.**

Post Secondary School Judging Categories

A. Sanitation & Mise en Place

6. There will be four floor judges that will judge
   i. Sanitation procedures
   ii. Basic organization/ cleanliness/ attitude
   iii. Safety

B. Skills Components:

1. Vegetable Cuts – Minimum of 5 cuts including but not limited to:
   i. Mince, Chop, Brunoise, Julienne, Batonnet, Dice(all sizes), Concassee',
   ii. These cuts should be used in your production
2. Meat Fabrication – Including but not limited to:
   i. Any proteins in the market basket
3. Emulsion Dressing
4. Soup– Including but not limited to:
   i. Cream, Puree, Clear
5. Main entrees - 2 different cooking techniques from the following:
   i. Sauté, Roast, Braise, Stew, Poach (shallow or deep), Panfry,
7. Sauces – 2 different types including but not limited to:
   i. Cream, Derivative from Mother sauce, Pan Sauce, Au Jus, Gravy, Butter Sauce, reduction, contemporary.
8. Vegetable Cookery – Including but not limited to:
   ii. Boiling, Steaming, Glazing, Sauté, Roasting, Pan Frying
9. Starch Cookery – Including but not limited to:
   iii. Pilaf, Roasted, Pureed, Pan fry, Boiled, Steamed, legumes
10. Creativity and Degree of difficulty

C. Written Test

The NOCTI test gives the student an opportunity to demonstrate their knowledge of culinary principles including but not limited to: Culinary Math, Sanitation, Safety, Techniques and Principles of Cooking.

Skills USA National Culinary Arts Competition Scoring Breakdown

High school and Post Secondary

Total Possible Points: 1000

Category	Value
Written Test (NOCI)	100
Sanitation	200
Mise en Place	100
Knife Skills/ Meat Fabrication	100
Technical Skills/ Taste	500
Total	1000

Tie Breaker: In the event of a tie, the competitor with the highest overall technical skills/ tasting score will be determined to be the winner. If there is still a tie, the competitor with the highest score on the written test will be determined to be the winner.

Deductions:

Poor/ no clean-up and reset of station and over all contest area…….....10-50 points

From Skills USA – Uniform infraction……..10-50 points

No Resume'…….50 points

GENERAL INSTRUCTIONS/ TIPS

- During Orientation for the Contest, a member of the Technical Committee will review the contest packet with you and give out the Market basket assignment.

- Before the Contest, carefully study the contest packet:
  - ✓ **Review** the list of available spices, herbs and ingredients in contest packet.
  - ✓ **Menu –** Write a menu based on the market basket
  - ✓ **Write** a Food List and a Preparation and Cooking Schedule designed to be ready during the specific service times identified in your packet.

- Please use only as much of each ingredient as is necessary. Return unused portions to the supply tables.

- Contact a judge to look at your garbage before removing anything from your station

- You may work on any component of your menu at any time. ie: You can begin working on your stock and/or soup during your knife cut time.

- You will present one (1) tasting plate to the Tasting Judges and one (1) presentation plate for the public to see

- Raise your hand and ask for assistance if there is anything that you do not understand. – There will be a period just before the start of the first session when all questions will be answered for all contestants to hear. Once the competition starts, any questions about technique or definitions, etc will not be answered – Questions about where to find ingredients and the like will be answered.

- Remember two things – This is about LEARNING and it should be FUN. If at any time you feel overwhelmed and feel that you can not continue, speak to a judge or member of the Technical committee. We are here for you!

Competition Schedule

8:00 am Contestants Meet in competition area

8:10 Every contestant has from 8:10 until 8:25 to set their station. No one will be allowed to their station after 8:25 until their scheduled start time

8:25 Open question and answer with Technical Committee Chair – ALL questions will be answered – everyone will be able to hear the questions and the answers. If a contestant is late and misses this session, the questions will not be repeated or re-answered.

8:45 Competition starts – Competitors will start in groups of 6-8, staggered in 15 minute intervals – The chart below shows each competitors schedule

JUDGING SCHEDULE

Contestant #	Group 1	Group 2	Group 3	Group 4	Group 5	Group 6
Judging Time						
Start	8:45	9:00	9:15	9:30	9:45	10:00
Meat Fabrication	9:15	9:30	9:45	10:00	10:15	10:30
Knife Cuts	10:15	10:30	10:45	11:00	11:15	11:30
Salad	10:45	11:00	11:15	11:30	11:45	12:00
Lunch	11:15	11:30	11:45	12:00	12:15	12:30
Soup	12:30	12:45	1:00	1:15	1:30	1:45
Entrée #1	1:00	1:15	1:30	1:45	2:00	2:15
Entrée #2	1:30	1:45	2:00	2:15	2:30	2:45
Clean up	2:00	2:15	2:30	2:45	3:00	3:15

A 30 minute lunch period is MANDATORY for all competitors. During this time, you are NOT allowed to go to your station for any reason including temperature adjustment.

Contest Timeline:

- Please be aware of the time frame for presentation of all items.
- The window for presenting is 5 minutes long. For example, contestants 1-8 have between 10:15 AM and 10:20 AM to present their knife cuts without penalty.
- Any items presented between 5-10 minutes late will result in a 25 % point loss for that item.
- Any items presented between 10-15 minutes late will result in a 75 % point loss for that item.
- Any items presented 15 minutes late will not be scored.
- Meat Fabrication and knife cuts will be judged at your station.
- On all other courses, the contestant will present one plate to the judges and one plate will go on the presentation table for the public.

ALL FOOD PREPARATION AND PRESENTATION MUST BE COMPLETED BY 3:15pm

3:45pm Judges Critique (approx. 45 minutes) Room to be announced

SKILLS COMPONENT:
Meat Fabrication

Each contestant will have Proteins in their market basket that need to be fabricated. They should be done in the best possible manner appropriate for their menu and use.

SKILLS COMPONENT:
VEGETABLE CUTS

Prepare a minimum of 5 different cuts that will be used in your menu - they can include, but are not limited to:

Mince, Chop, Brunoise, Julienne, Batonnet, Dice (all sizes), Concassee',

SKILLS COMPONENT:
SALAD

Prepare a green type salad with appropriate garnishes and dressing in compliance with the criteria listed below.

SKILLS COMPONENT:
Entrée, Sauce, Starch, Vegetable

Prepare two entrees of choice each using a different cooking method. Vegetables and starches should also demonstrate different cooking methods. A minimum of 4 different cooking methods must be used in the two entrees

General Criteria for Market Basket
Skills USA Culinary-Post Secondary Competition

Green Salad
Choice of Permanent Semi-permanent or Temporary Emulsion Garnish to include a minimum of two distinct knIfe cuts.

Soup
Choice of Cream, Puree or Clear Garnish to include a minimum of two distinct knIfe cuts.

Entrée 1	
Protein:	Seared, Sautéed or Roasted
Vegetable:	Boiled or Blanched
Starch:	Steamed or Roasted
Sauce:	Reduction or Emulsion, variation of Mother Sauce

Entrée 2:	
Protein;	Braised or Poached
Vegetable:	At Least Two Vegetables displaying distinct knife cut
Starch:	Simmered Grain/Pilaf/Risotto
Sauce:	Fortified Reduction of Braising Liquid or Nage

GOOD LUCK FROM THE CULINARY ARTS TECHNICAL COMMITTEE, THE NATIONAL EDUCATION TEAM AND THE JUDGES!!

Skills USA Culinary-Post Secondary Competition 2015

Mystery Basket 1

1 whole tilapia, 1 1/2-2 lb ea.
2 ea. chicken leg quarters
1 oz. salt pork
2 oz Feta cheese
½ lb. kale
½ lb. Sugar snap peas
½ lb. Shitake mushrooms
1 head Romaine lettuce
½ lb Parsnips
1 lb. Yukon gold potatoes
3 oz. corn meal
3 ea. Plum tomatoes
1 cup red lentils

Mystery Basket 2

1 each, 3 lb. chicken
1 lb. beef flat iron
2 slices bacon
2 oz Firm tofu
½ lb. Snow peas
1 lb. Yellow squash
½ lb. Oyster mushrooms
½ lb. Arugala
½ lb. Rutabaga
1 lb. Russet potatoes
3 oz. cous cous
3 ea. Plum tomatoes
1 cup green split peas

Mystery Basket 3

1 lb. pork loin
1 each, 3 lb. chicken
2 slices bacon
2 oz Chicken Liver
½ lb. haricot vert
1 lb. Eggplant (asian)
½ lb. Pearl onions
1 lb. Belgium endive
1 lb. Celery root
1 lb. Red (b) potatoes
3 oz. Bulgur Wheat
3 ea. Plum tomatoes
1 cup Green lentils

Store Table Sample Available Throughout Exam
Subject to change based on availability

Dry Goods	Produce	Dairy
• AP Flour • Sugar • Flour • Corn Meal • Cous cous • lentils • French Bread • Corn Starch • Honey • Brown rice • Vegetable Oil • Extra Virgin Olive Oil • Soy Sauce • Tabasco • Orzo pasta • Anchovy filets • Dijon Mustard • Grain Mustard • Walnuts • Tomato Puree • Tomato Paste • Almonds • Capers • Calamata Olives • Sun Dried Tomatoes • White Wine Vinegar • Red Wine Vinegar • Sherry Vinegar • Asst. Dry Spices • Chicken, beef and fish stock base • Demi glace sauce • Water Chestnuts	• Apples • peaches • Lemons • Shallots • Garlic • Onions • Carrots • Celery • Leeks • White Mushrooms • Red Peppers • Green Leaf Lettuce • Parsley • Scallions • Radicchio	• Butter • Cream • Milk • Eggs • Cheddar Cheese • Swiss Cheese • Parmesan Cheese • Blue Cheese

SkillsUSA
2015 Contest Projects

Customer Service

Click the “Print this Section” button above to automatically print the specifications for this contest. Make sure your printer is turned on before pressing the button.

2015 Customer Service
Contestants Information Packet

Welcome to the 2015 SkillsUSA Competitions. The following is important information concerning the contest.

1. **Time & Location of Competition:**

   - DATE: Wednesday June 24h, 2015 Time: Location: Freedom Hall A3-A4

2. **Arrival at competition room and expectations:**

   - **Arrival:** You are expected to arrive and check in with the Skills USA representative **30 minutes before** your appointed time. The representative will be outside the competition room. You should in proper Skills USA dress and ready to start. If the contest is ahead of schedule you may be asked to start prior to the appointed time. Any contestant not present when called will miss the competition and no make-up will be given.

   - **Materials to Bring:**
   - Pen or Pencil.
   - The scenario that is included in this packet. If you forget the scenario material no new material will be provided. **You are required to leave the scenario material with the judge before leaving the competition room.**
   - Contestants are not allowed to bring food or drink into the competition room.

   - **Setting for Demonstration:** When you start the demonstration, you are to assume that it is 8 a.m. and you have just opened the office for business.

   - **Competition Room Rules:** Wait outside the competition room until judge escorts you into the room. You will then be given a minute to enter, go to the demonstration area become acquainted with the "set" for the competition. The demonstration will last for 10 minutes during which you will be presented with various customer service activities. After completion of the demonstration, you will be escorted from the room by one of the Courtesy Core members. Please remember that you are being judged from the moment you enter until you leave the competition room.

   - **Scenario:** You will be role playing a customer service representative for a company. Please study the enclosed scenario information so that you will be ready to start the demonstration as soon as you enter the room. You are expected to be familiar with the company's history, policies, procedures, and services before you come to the competition room.

   - **Judging Criteria:** The criteria on which you will be judged are the following:

     - Greeting and Introduction
     - Voice (Pitch, Tempo, Volume)
     - Mechanics (Diction, Grammar, Pronunciation)
     - Politeness
     - Appearance, Grooming
     - Personal Department (Poise, Eye Contact, Mannerism)

- Maturity in Answers to Questions
- Enthusiasm
- Personal Salesmanship (Self-Confidence and Persuasiveness)
- Participation

3. Debriefing:

- Thursday, June 25th at 4:00 p.m. in Freedom Hall A4

Doggy Walker

2015 SKillsUSA

National Conference Customer

Customer Service Contest

Doggy Walker

Darlene Howell, Owner

123 Main Street

Louisville, KY 64110

502-989-WALK (9255)

About Us

Doggy Walker has been keeping dogs happy since 1990. Today we still consider "doggy happiness" to be our specialty. Doggy Walker developed as an extension of Critter Sitters, our pet sitting service that was established in 1985. Our first midday client was a lady who was desperate to keep her dog, but her 14 hour work days were making it impossible. We wanted to help, but our pet sitters mostly worked mornings and evenings, and they weren't too eager to commit to mid-day visits every M-F. We knew we had to help this lady keep her doggy! We finally managed to find a sitter willing to work the afternoon shift, and Doggy Walker division was up and walking! We knew we had to address this need. Soon we had multiple employees who just wanted to walk dogs in the afternoon. In fact, they loved the exercise, hours, and companionship. Some of our original walkers are still with us!

That was 25 years ago, and now we walk lots of dogs. Long commutes and busy Washingtonian-style work schedules often make it difficult for owners to fulfill all of their dogs' needs during the week. Doggy Walker helps loving, but busy, dog owners keep their dogs happy and their rugs clean.

Doggy Walker would like to thank our wonderful clients who loan us their dogs for 30 minutes each day. You have no idea how many smiles, laughs, and funny stories you have provided us. Your dogs have taught us many things, and they never fail to improve our day. Thanks for making our tails wag!

Our Doggy Walkers

We are very proud of our staff of professional dog walkers. Each of our walkers is an employee of the company (not an independent contractor) and has completed our multi-step application process which includes a criminal background check, drug testing, and credit check. All of our walkers are adults who have one thing in common—a sincere love of dogs! Our employees range in age from their mid-twenties to mid-seventies, and most have professional backgrounds. Our staff is a mix of retirees, stay-at-home moms, students, writers, artists, and the self-employed. Many of our employees have been with us more than 10 years!

Doggy Walker

Benefits of Mid-day Dog Walks

Puppies: (under 1 year): Daily mid-day visits help establish and maintain a housebreaking schedule. Proper housebreaking requires a consistent schedule of bathroom breaks for your puppy. Crate trained puppies need to get out every 3 - 4 hours for proper training and socialization. Your dog walker makes daily visits while you are at work. Not only is your puppy's schedule kept consistent, but he/she will also be socialized with someone other than the owner. Note: We schedule walks for puppies within a one-hour window.

Adult Dogs: Adult dogs need regular exercise to ensure good physical and mental health. Loving owners who work long hours can depend on Doggy Walkers to walk their dogs during the week when their time is the most limited. Crated dogs are particularly in need of a mid-day break. Over crating and under exercising can result in a hyperactive, under-socialized dog that is harder to live with and train. Doggy Walkers often works with clients in weaning dogs from their crate. Note: We schedule walks for healthy adult dogs within a two hour window.

Elderly Dogs: The elderly dog often needs more frequent bathroom breaks than he/she needed as a younger dog. When older dogs have accidents they often become stressed because they have been trained to go outside but just cannot "hold it" anymore. In addition, a frustrated owner may end up confining the older dog. Doggy Walkers can make daily afternoon visits to give the elderly dog his/her much needed bathroom break. This keeps both dog and owner happy! Note: We schedule walks for elderly dogs within a 1 - 2 hour window, depending on your dog's needs.

Visits

On each visit your dog walker will take your dog for a 20 – 30 minute walk (picking up and disposing of any waste), fill water dishes, give food and/or treats (if requested), and provide medications (if necessary). On extreme weather days, walking time with your pet may be reduced and replaced with indoor play time.

Multiple pets within a single household will be walked together (unless instructed differently). Doggy Walkers does not combine walks with other pets in the area. Only pets within the household are walked together.

Your dog walker will leave you a note at the end of each visit letting you know the time of their visit and how your pet's afternoon visit went. Your walker will also indicate if there were any accidents in your home or if anything unusual occurred during their visit. This is a good opportunity to keep track of your pet's routine, as well as confirmation of the time that your pet was let out.

Holidays

Doggy Walkers does not provide service on the following holidays: New Year's Day, Memorial Day, 4th of July, Labor Day, Thanksgiving Day, and Christmas Day. **** Although Doggy Walkers provides service on all other federal holidays, clients will not be charged if they cancel on a federal holiday.**

Doggy Walker

Cancellations

The only way to cancel or change your walk is to call Doggy Walkers office. Requests made via a note or made by calling walkers directly are not honored. This policy ensures that we bill you correctly!

Power Pups:

> Because each of our Power Pups clients has a reserved slot on one of our Doggy Walkers limited schedules, daily cancellations do not reduce your bill. However, you may "make up" the missed visit during the same week. "Make up" days are subject to your dog walker's availability. If you need to cancel your daily walk, please call our office at 703-989-WALK (9255) by 10:00 AM to ensure the walker gets the message in time.

Casual Pups:

> Clients pay only for the walks they receive as long as they cancel with 24 hour notice.

Billing Cycle

Clients are billed on a 4-week bill cycle. Clients may choose to be invoiced and pay by check or be an "auto pay" client and pay by major credit card. Paying by check requires a credit card on file.

Billing Cycle

2015 Bill Cycles:

Jan 5, 2015 - Feb 1, 2015	Jul 27, 2015 - Aug 23, 2015
Feb 2, 2015 - Mar 1, 2015	Aug 24, 2015 - Sep 27, 2015
Mar 2, 2015 - Mar 29, 2015	Sep 28, 2015 - Oct 25, 2015
Mar 30, 2015 - Apr 26, 2015	Oct 26, 2015 - Nov 22, 2015
Apr 27, 2015 - May 24, 2015	Nov 23, 2015 - Dec 20, 2015
May 25, 2015 - Jun 28, 2015	Dec 21, 2015 - Jan 17, 2016
Jun 29, 2015 - Jul 26, 2015	

Doggy Walker

Power Pups Rate Sheet

Standard Visits 20-30 minutes each	5 walks per week	4 walks per week	3 walks per week	2 walks per week	1 walk per week
1 Doggy	$14.00 per visit	$16.00 per visit	$18.00 per visit	$20.00 per visit	$22.00 per visit
Extra Walks	$12.00	$14.00	$16.00	$18.00	$20.00
2 Doggies	$17.00 per visit	$19.00 per visit	$21.00 per visit	$23.00 per visit	$25.00 per visit
Extra Walks	$15.00	$17.00	$19.00	$21.00	$23.00

Mini-Visits 15 minutes each for toy breeds & elderly dogs	5 walks per week	4 walks per week	3 walks per week	2 walks per week	1 walks per week
1 Doggy	$11.00 per visit	$13.00 per visit	$15.00 per visit	$17.00 per visit	$19.00 per visit
Extra Walks	$9.00	$11.00	$13.00	$15.00	$17.00
2 Doggies	$14.00 per visit	$16.00 per visit	$18.00 per visit	$20.00 per visit	$22.00 per visit
Extra Walks	$15.00	$17.00	$19.00	$21.00	$23.00

Rates:
The above listed rates are for weekday (M-F) and mid-day dog walks only. Mid-day walks are usually defined as walks between the hours of 11:00 AM and 3:00 PM. Walks outside of these timeframes are normally assessed the Casual Pup Rate. Please feel free to contact our office with any special time requests.

Vacation Allowance
Each client has a two-week vacation allowance per service year. Each client may cancel two weeks of walks per year, in one-week blocks, without charge. In addition, if you travel at the same time as your dog walker, you will not be charged. **Please Note:** Clients may choose to have house checks in lieu of dog walks during any additional travel/vacation periods that occur after the two-week vacation allowance has been used. Must have service for at least three months to use vacation time.

Casual Pups Rates Sheet

# of Doggies	Standard Visits 20-30 min each
1 Dog	$25.00 per walk
2 Dogs	$30.00 per walk
3+ Dogs	add $10.00 per dog

Doggy Walker

FAQ

- How do I add or cancel a doggy walk?

Contact our office by 10:00 AM (24 hours for Casual Pup visits)! This gives us time to get schedule requests to the walkers before they start their routes. (Please note that because the Power Pups rates are flat monthly rates, cancelled visits do not typically reduce your monthly bill.) If you are calling to cancel a walk, we will call to confirm only if you request a confirmation.

- Should I call my walker directly?

No! Bad human! GRRR
Our employees are paid to walk your wonderful dog but are not paid to answer the phone. To respect our employees' privacy and maintain our professionalism, please do not call your walker directly. All calls should go through our office number only. This ensures accurate scheduling, billing, and payroll. We cannot guarantee service that is requested by calling your walker directly.

- What are your office hours?

Our office hours are Monday - Friday from 8:00 AM – 5:00 PM
Our voice mail is always on. Messages are checked and responded to only during office hours. If you get the voice mail during office hours, we are on the phone.

- What is your snow policy?

To ensure the overall safety of our walkers, we reserve the right to cancel walks if the schools are closed in your county due to inclement weather.
If we decide to cancel all walks, your walker will call you at home/work to let you know if they will be walking that day. There will be no charge if we cancel your walk due to inclement weather.

- What if I need to change my weekly schedule?

Call our office to discuss your needs. Hopefully your current dog walker can accommodate your request. If necessary, we will assign a new dog walker.

- Do you offer pet sitting services when I travel?

Critter Sitters handles all pet sitting reservations.
Call 703-998-SITS (7487)

We will often wrap pet sitting visits around existing mid-day schedules. This saves you money on our regular pet sitting rates! Let the Reservationist know you are a Doggy Walkers client—they will email, fax, or mail you the paperwork we will need for your pet sitting file.

Doggy Walker

Customer Information Sheet

Customer Information:	
Name	
Address	
City	
State	
Zip	
Home Phone	
Work Phone	
Cell Phone	
Email	

Doggy Information:						
	Doggy 1			Doggy 2		
Name						
Age						
Breed						
Size	Small	Medium	Large	Small	Medium	Large
Description						

Schedule			
Select Days for Walks			
☐	Monday	☐	Thursday
☐	Tuesday	☐	Friday
☐	Wednesday		

Preferred Time			
PUPPIES:		Adult Dogs:	
☐	10:30am - 11:30am	☐	11:00am - 1:00pm
☐	11:30am - 12:30pm	☐	12:00pm - 2:00pm
☐	12:30pm - 1:30pm	☐	1:00pm - 3:00pm
☐	1:30pm - 2:30pm		
☐	2:30pm - 3:30pm		
Start Date			

Doggy Walker

Question/Issue/Request Form

Date: _____ Time: _____

Client Name: _____ Pet Name(s): _____

Home #: _____ Work #: _____

Cell #: _____ E-Mail Address: _____

Message:

_____

_____

_____

_____

_____

Action Taken:

_____

_____

_____

_____

Doggy Walker

Interoffice Memo

Date: 6/23/15

To: M. Contestant, Customer Service Representative

From: Jennifer/Office Manager

RE: Schedule for today

Lynette is out sick today and the other walkers all have full schedules. I will be in the field covering her route until 4:00pm. Please do your best to answer any questions or resolve issues on your own. If there is something I need to address personal, take message. I will return all phone calls tomorrow.

Have a great day and Thanks!

Jennifer

Doggy Walker Scenario – Phone Call Customer

Name:

Steve & Kristen Smith
1135 Dry River Ct
Louisville, KY 40299
502-352-4279

Your History:

- 1 dog – Indigo (Mutt 40lbs)
- Visits Monday - Friday at 12:00pm
- Walker is Susie

Your script during the contest is to:

1. Call five (5) minutes after the contestant enters contest area.

   Hi, my name is Kristen Smith. My neighbor, Mr. Johnson, and I both have the same dog walker and our dogs, Indigo & Sami get along well together, and we were wondering if it would be possible for both of our dogs to be walked at the same time.
   - **Policy states pets within a same household can be walked together, but sitters are not to walk two separate households at the same time.**

   Would it be ok if we just kept Sami at my house?
   - **This is within policy guidelines.**

   What would the new rate be?
   - **New rate of $17.00 per visit should be quoted (previous rate was $14.00).**

   Can this start tomorrow?
   - **Should not be an issue as long as both dogs are in the house.**

   Thanks! Have a great day.

Doggy Walker Scenario – Walk In Customer

Name:

Gerry & Robyn Jackson
7456 Elderberry Ct
Louisville, KY 40299
502-987-4862

Your History:

- 2 dogs – Coco (Yorkie 8 lbs) and Misty (Maltese 10 lbs)
- Visits Monday, Wednesday & Friday at 1:00pm
- Walker is Francis

Your script in this competition is:

1. Enter room seven (7) minutes after the contestant enters contest area.

2. Walk in inquiring about changing your current mid-day schedule from 3 days a week to 5 days a week.

3. Ask what the new cost will be for the increased number of visits.
    - **Rate Reduction for increased number of visits**

4. Also state that you are going to be home with the kids and would like to cancel next two week's visits.
    - **Power Pup vacation policy only allows one-week blocks at a time.**

5. State that your walker is also on vacation during this time.
    - **Power Pup vacation policy will not bill if you take vacation at the same time as your sitter.**

Doggy Walker Scenario –Irate Phone Call Customer

Name:

John & Lynn Shue
3005 Jeffersonton Road
Shepherdsville, KY 40165
502-555-7101

Your History:

- 1 dog – Willow (Black Lab 73 lbs)
- Visits Monday-Friday at 11:30am
- Walker is Lynette

Your script during the contest is to:

1. Call nine (9) minutes after the contestant enters contest area.

   Hi, this is Lynn Shue (sound upset and annoyed). I am not happy right now because my alarm company just called stating that the alarm is going off in my house.

   I left a note for Lynette, my walker, on Monday asking her not to come out today. She said that it wouldn't be an issue

   - **Cancellation policy – all changes in schedule must be done through the Doggy Walker office. Requests made via notes are not honored.**

   This has never been an issue in the past. I usually let her know if there are changes in the schedule via a note.

   - **Sitter is out sick today and the office was not aware of any changes in the schedule – Cancellation policy stands.**

   Well this is the 3rd time the alarm has gone off and the company is now going to charge me a $100 fine for too many false alarms. I'm not paying this fee, you guys need to pay it since it's your fault it went off.

   - **Sitter is out sick today and the office was not aware of any changes in the schedule – Cancellation policy stands.**

   I want to speak to the manager.

   - **Jennifer is out of the office for the day.**

   Please have her all me when she gets back to the office. Thanks.

Doggy Walker - Customer Service Judge

Your job during the contest is to:

1. Observe the contestant during the scenario and judge their performance based on the following criteria.
    a. Did the contestant greet the customers (both phone customer and irate customer)?
    b. How was the contestant's voice (pitch, tempo, volume)?
    c. Did the contest use proper mechanics (diction, grammar, pronunciation)?
    d. Was the contestant polite to the customers?
    e. How was the contestant's appearance?
    f. How was the contestant's demeanor (poise, eye contact, mannerism)?
    g. Did the contestant answer the question with maturity?
    h. Was the contestant enthusiastic?
    i. Did the contestant have personal salesmanship (confidant and persuasiveness)?
    j. Did the contestant actively participate?

Greeter Instructions

Contestant Arrives:

- Inform contestant when they walk in the room, they will have 5 minutes to prepare before the contest begins.
- Remind them they should state their number and never their name
- Cell phones are not allowed, you will hold them at your desk for them until they finish the contest.

Contestant Leaves:

- Give contestant their phone, if you were holding one for them
- Collect their packet, notes & any scrap paper related to this contest scenario (anything contest related must be returned)
    - They can keep binders, pens and/or personal items, but nothing contest related
- Remind contestant to return at 5:00pm to room A-3 (Contest Check-in area).
    - We will be announcing top 10 Secondary finalists and will provide them with their day 2 competition material

2015 Customer Service
Contestants Information Packet

Welcome to the 2015 SkillsUSA Competitions. The following is important information concerning the contest.

1. **Time & Location of Competition:**

   - DATE: Thursday June 25h, 2015 Time: Location: Freedom Hall A4

2. **Arrival at competition room and expectations:**

   - **Arrival:** You are expected to arrive and check in with the Skills USA representative **30 minutes before** your appointed time. The representative will be outside the competition room. You should in proper Skills USA dress and ready to start. If the contest is ahead of schedule you may be asked to start prior to the appointed time. Any contestant not present when called will miss the competition and no make-up will be given.

   - **Materials to Bring:**
   - Pen or Pencil.
   - The scenario that is included in this packet. If you forget the scenario material no new material will be provided. **You are required to leave the scenario material with the judge before leaving the competition room.**
   - Contestants are not allowed to bring food or drink into the competition room.

   - **Setting for Demonstration:** When you start the demonstration, you are to assume that it is 8 a.m. and you have just opened the office for business.

   - **Competition Room Rules:** Wait outside the competition room until judge escorts you into the room. You will then be given a minute to enter, go to the demonstration area become acquainted with the "set" for the competition. The demonstration will last for 10 minutes during which you will be presented with various customer service activities. After completion of the demonstration, you will be escorted from the room by one of the Courtesy Core members. Please remember that you are being judged from the moment you enter until you leave the competition room.

   - **Scenario:** You will be role playing a customer service representative for a company. Please study the enclosed scenario information so that you will be ready to start the demonstration as soon as you enter the room. You are expected to be familiar with the company's history, policies, procedures, and services before you come to the competition room.

   - **Judging Criteria:** The criteria on which you will be judged are the following:

     - Greeting and Introduction
     - Voice (Pitch, Tempo, Volume)
     - Mechanics (Diction, Grammar, Pronunciation)
     - Politeness
     - Appearance, Grooming
     - Personal Department (Poise, Eye Contact, Mannerism)

- Maturity in Answers to Questions
- Enthusiasm
- Personal Salesmanship (Self-Confidence and Persuasiveness)
- Participation

3. Debriefing:

- Thursday, June 25th at 4:00 p.m. in Freedom Hall A4

Busy Bee Cleaning Service

2015 SKillsUSA

National Conference Customer

Customer Service Contest

Busy Bee Cleaning Service

Stacy Bee, Owner

5200 Ashby Lane

Louisville, KY 64110

502-busybee (502-287-9833)

About Us

Busy Bee Cleaning Service is a residential housecleaning business started in 1996 by Stacy Bee. All business is within the metropolitan Louisville area. This would include the following cities: Louisville, Clarksville, Jeffersonville, St. Matthews, Jeffersontown, Shively, Shepherdsville, Prospect, and Brooks. Busy Bee provides basic and special housecleaning services at varying rates depending on the size of the home and the type of cleaning services needed. The company caters to both scheduled housecleaning (weekly, bi-weekly, or monthly) as well as "special" one-time housecleaning jobs.

Our Team

The business is licensed and has 15 employees, the owner/manager Stacy, the accountant Jill King, the customer service representative M. Contestant, and 12 domestic cleaning employees.

Only employees of the company are permitted within a customer's home at any time. All employees are bonded and insured and are subject to random drug tests, background screening, and credit checks.

Schedules

- The office is open M-F from 8:00 AM – 5:00 PM.
- Cleaning services are provided M-F from 8:00 AM – 5:00 PM.
    - All employees take a one-hour lunch break between morning and afternoon jobs.
- On special occasions appointments are made on Saturday but there is an extra charge.
- No business is conducted on Sundays.
- All basic cleaning jobs are scheduled for 3 hours.
- Special cleaning items take an additional 30 minutes each.

Cancellations

Anyone canceling service without 24 hours' notice is billed a cancellation fee of $15.00. The customer is informed of this charge both at time of settling up scheduled services and when making an appointment for special cleanings. If the customer calls to cancel within 24 hours of appointment, the customer is once again informed of the cancellation fee and the bill is sent out immediately.

Holidays

Busy Bee does not provide service on the following holidays: New Year's Day, Memorial Day, 4th of July, Labor Day, Thanksgiving Day, Black Friday, Christmas Eve, and Christmas Day.

Busy Bee Cleaning Service

New Customers

New customers are given "estimated" quotes for services on the Price Lists. If the lead employee in charge of the client's service believes the price needs to be adjusted for reasons such as the house has more rooms than client estimated or the client has extremely messy pets, the first cleaning will be based on the original quote and a new quote will be given to the client prior to the second job. The client can decide to continue or cancel at that time. A customer information sheet is completed and kept on file for each new customer. The information is updated as needed.

Billing

Only cash or checks are accepted as payment. All special housecleaning jobs are expected on date of service. However, scheduled jobs are billed on the day of service (a bill is left at the home) and payment is expected within 5 days of the day of service. Customers not making payments by the fifth day after the date of service are charged a $5.00 late fee. If the payment is not received within 10 days of the day of service, the customer is sent a letter requesting payment plus $10.00 late fee and no further service is provided until the bill is paid. If a customer's check is returned for insufficient funds (a bad check) the customer is charge a $10.00 NSF fee. New customers and customers that have been more than 10 days late with payment or who have written a bad check are required to make payment on the day of service for the following three cleaning to demonstrate willingness to pay within a timely manner.

Busy Bee Cleaning Service

Rates Sheet

Basic Cleaning

Rooms	Charges
Up to 8 rooms	$125.00
9-11 rooms	$150.00
12-16 rooms	$175.00
Greater than 17 room	$200.00

Special Cleaning

Task	Charges
Clean window inside only	$1.50 per window
Clean inside of oven	$5.00
Dust mini blinds	$2.00 per blind
Vacuum furniture	$3.00 per piece
Wash hardwood floor	$50.00 per room (room size 250 square feet)
Saturday Charges	$30.00 for 8 or less rooms $50.00 for 9-16 rooms $70.00 for more than 16 rooms

Discounts

Description	Discount
Bi-Weekly Service	$25.00 discount per visit
Weekly Service	$50.00 discount per visit
Referrals	$25.00 discount per referral

Busy Bee Cleaning Service

The following is included in a basic cleaning

Bathroom:
General dusting
Bathtub and shower tiles cleaned
Shower door cleaned
Vanity and sink cleaned
Mirrors and fixtures cleaned
Floors wiped and disinfected
Toilets cleaned and disinfected
Cobwebs removed

Kitchen:
General dusting
Clean outside of range hood
Clean top and front of range
Clean sink
Clean front of other appliances
Floors vacuumed and mopped
Cobwebs removed
Wipe out microwave

Other Rooms:
Furniture dusted
Stairs vacuumed
Empty closet floors vacuumed
Wood Floors vacuumed and dust mopped
Cobwebs removed
Picture frames dusted
Lampshades dusted
Mini blinds dusted
Heavy knick-knack areas are feather dusted

Busy Bee Cleaning Service

Customer Information Sheet

Name:						
Address:						
City State:						
Zip code:						
Home phone:						
Work phone:						
Cell phone:						
Requested Service Date:						
Type of home:	☐	Apartment	☐	House		
Number of rooms to be cleaned including bathrooms:	☐	8 or less rooms	☐	9-11 rooms		
	☐	12-16 rooms	☐	Greater than 17 rooms		
Pets: type and number:						
Type of service:	☐	Weekly	☐	Bi-weekly	☐	Monthly
Special needs, concerns, wishes:						

Busy Bee Cleaning Service

New Customer Quote

Name: _____

Address: _____

_____

Description of Service:

Task			Total Charges
Scheduled Basic Cleaning Charges:			
Special Cleaning Charges:			
Task	**Charges**	**Quantity**	**Total Charges**
Clean window inside only	$1.50 per window		
Clean inside of oven	$5.00		
Dust mini blinds	$2.00 per blind		
Vacuum furniture	$3.00 per piece		
Wax hardwood floor	$50.00 per area (area size= 250 square feet)		
		Subtotal	
		Discounts	
		Total	

Payment is due within 5 days of the date of service. Please make check out Busy Bee Cleaning Services.

Busy Bee Cleaning Service

Question/Issue/Request Form

Date: _____ Time: _____

Client Name: _____ Pet Name(s): _____

Home #: _____ Work #: _____

Cell #: _____ E-Mail Address: _____

Message:

_____

_____

_____

_____

_____

Action Taken:

_____

_____

_____

_____

Busy Bee Cleaning Service

Interoffice Memo

Date: 6/24/15

To: M. Contestant, Customer Service Representative

From: Stacy Bee, Owner/Manager

RE: Schedule for today

I will be out of the office all day and will be unreachable by phone or page. Please do your best to answer any question or resolve issues on your own. If there is something I need to address personal, take message. I will return all phone calls tomorrow.

Have a great day and Thanks!

Stacey

Busy Bee Cleaning Service Scenario-Irate Phone Call Customer

Name:

Paul & Janet Elm
11139 Eagle Court
Louisville, KY 40161
502-213-5630

Your Home:

- 3 bedrooms, 3.5 baths, living room, dining room, family room, and kitchen.

Your job during the contest is to:

1. Call five (5) minutes after the contestant enters contest area.

   Hi, this is Janet Elm (sound upset), I want to speak to the owner.
   - **Stacy Bee, the owner, is out of the office for the day.**

   I just came home and my front door was left unlocked and the security alarm was not reset.
   - **Contestant should offer some kind of empathy statement.**

   I don't know if anything was taken, but things don't look right, things seem out of place.
   - **Contestant should refer you to call the authorities.**

   I am going to call the police and file a report and I will be holding the company liable for anything that is missing. I don't ever want your cleaning service to enter my home again. I will be coming up there to pick up my keys and I want assurance the owner will be available.
   - **Stacy Bee, the owner, is out of the office for the day.**

   I expect to hear back from the owner letting me know when they will be there so I can get my keys!

Busy Bee Cleaning Services Scenario – Walk-In Customer

Name:

Danny & Doreen Jones
5302 Donnie Wood Ct
Louisville, KY 40299
502-775-1234

Your Home:

- 3 bedrooms, 2.5 baths, living room, dining room, family room, den, kitchen and a finished basement recreation room
- 2 dogs and 1 cat

Your job in this competition is:

1. Enter room seven (7) minutes after the contestant enters contest area.

2. Walk in inquiring about new service.
   - **This should be considered a 12-room house since the half bath is considered a full room.**

3. Request Saturday service, before 7:00 AM.
   - **There is an extra fee for Saturday cleaning.**
   - **Cleaning time start at 8:00 AM.**

4. You are on a very tight budget, so you change your mind to have a weekday visit as early as possible.

5. Ask if there is a discount for frequency.
   - **There is a $25.00 discount for bi-weekly visits or $50.00 discount for weekly visits (per-visit discount).**

6. Indicate that you are concerned about your pets getting out. Make sure the cleaners close the outside door quickly so no animals get out.
   - **This should be included in the special instruction section of the customer information form.**

Busy Bee Cleaning Service Scenario-Irate Phone Call Customer

Name:

Carla and Tim Bowe
3005 E Blue Lick Rd
Shepherdsville, KY 40165
502-543-7101

Your Home:

- 4 bedrooms, 3 baths, living room, dining room, family room, kitchen and a finished basement which includes an office, theater room and game room.

Your job during the contest is to:

2. Call nine (9) minutes after the contestant enters contest area.

   Hi, this is Carla Bowe (sound upset). I am not happy right now because I came home for lunch and my cleaner has her child with her who was eating and drinking on my couch watching TV.
   - **Contestant should provide empathy statement**
   - **Policy is no one other than employees of the service are permitted in a customer's home.**

   I told her to leave and not to expect payment. Her child spilt something on my couch and it is now stained. I am not paying for her child to mess up my couch. I want my couch replaced.
   - **Contestant should attempt to de-escalate the customer and provide a solution to issue like offering to have the couch cleaned vs. replacing it.**
   - **Contestant should agree no cost for today's visit.**

   And I want a new cleaner; I don't want to take the chance that this cleaner will bring her child into my home with her again.
   - **Contestant should agree and will work to find a new cleaner.**

Busy Bee Cleaning Service- Customer Service Judge

Your job during the contest is to:

1. Observe the contestant during the scenario and judge their performance based on the following criteria.
    a. Did the contestant greet the customers (both phone customer and irate customer)?
    b. How was the contestant's voice (pitch, tempo, volume)?
    c. Did the contest use proper mechanics (diction, grammar, pronunciation)?
    d. Was the contestant polite to the customers?
    e. How was the contestant's appearance?
    f. How was the contestant's demeanor (poise, eye contact, mannerism)?
    g. Did the contestant answer the question with maturity?
    h. Was the contestant enthusiastic?
    i. Did the contestant have personal salesmanship (confidant and persuasiveness)?
    j. Did the contestant actively participate?

SkillsUSA
2015 Contest Projects

Dental Assisting

Click the “Print this Section” button above to automatically print the specifications for this contest. Make sure your printer is turned on before pressing the button.

1

Interview

Room will be set up with desk/table for interview.

Judge will interview contestant using the following sample questions or several developed by the judges.

Interview questions

1. How do you define doing a good job?
2. Tell me what "success" means to you.
3. How would you grade your ability to communicate with upper level management, customers, and peers?
4. What do you do when you have a great deal of work to accomplish in a short period of time?
5. What do you feel an employer owes an employee?

Task	Poss. Pts	Points	Comments
Greeting and Introduction	10		
Appearance: Grooming, eye contact, handshake, posture	10		
Maturity: Answer to questions	10		
Motivation: Enthusiasm, goal directed, self confidence, persuasive	10		
Personal Salesmanship: Knowledge base and skills, team player, supervision, work ethic	10		
Total points	50		

Contestant Number _____

Dental Assisting Scorecard

Items Evaluated	Possible Points	Contestant Number				
Interview	50					
Infection Control	50					
Instrument and Equipment Identification	50					
Chairside Instrument Transfer	70					
HVE Placement	50					
Anesthetic Syringe Assembly	55					
Anesthetic Syringe Transfer	50					
Anesthetic Syringe Disassemble	55					
Oral Hygiene Instructions	40					
Specialty Instrumentation	50					
Radiographic Faults	60					
Dental Charting (Universal)	50					
Oral Pathology	50					
Mounting Radiographs	60					
Dental Anatomy	50					
ID Prosthesis	50					
Medical Emergencies in the Dental Office	60					
Dental Office Supplies	50					
Written Test	50					
Résumé Penalty	0 or -10 only					
Clothing Penalty	0 to -50					
Total Possible Points	1,000					

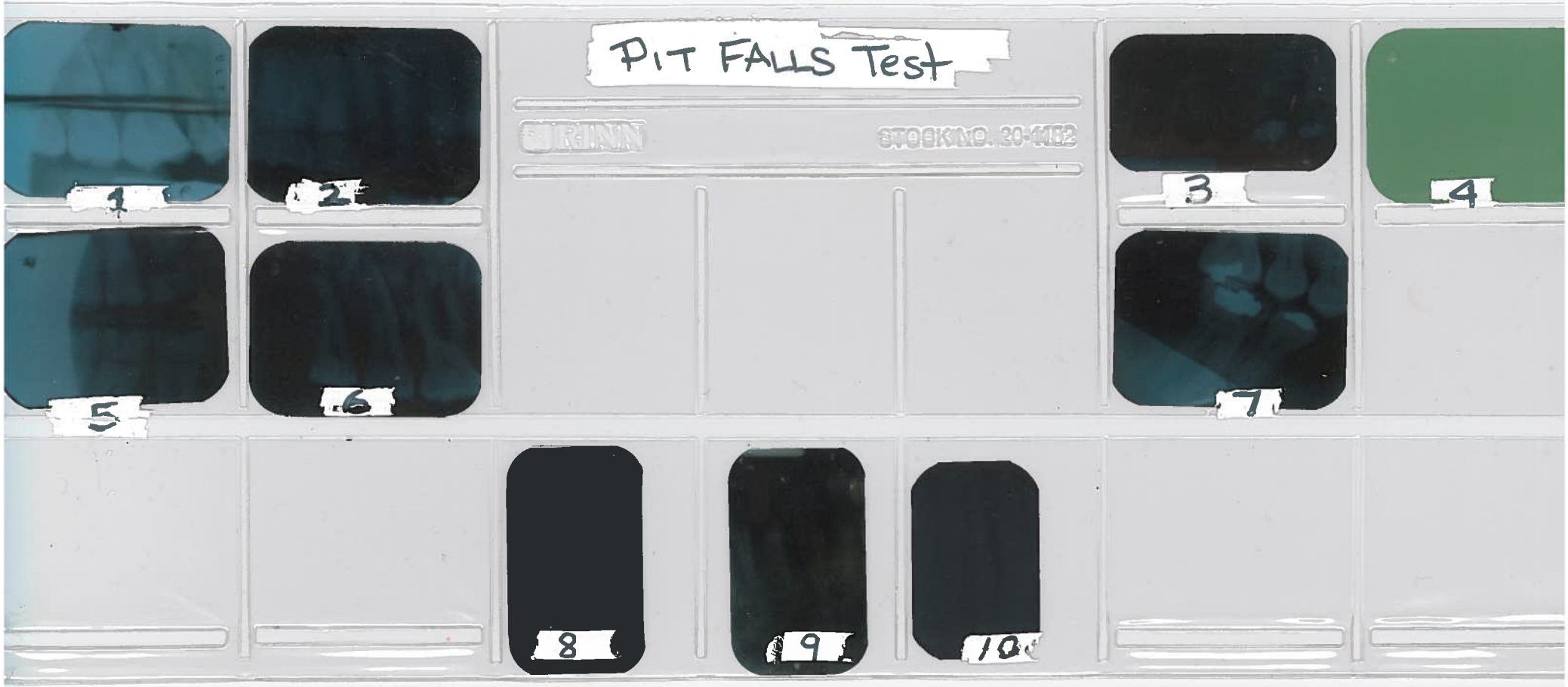
PIT FALLS Test
RINN
STOCK NO. 20-1452
1
2
3
4
5
6
7
8
9
10

CONTESTANT #_____

SKILLS USA DENTAL ASSISTANT CONTEST

RADIOGRAPHIC FAULTS

PLEASE PLACE YOUR ANSWER ON THE ANSWER SHEET

1.
2.
3.
4.
5.
6.
7.
8.
9.
10.

CONTESTANT #_____ KEY 22 #3

SKILLS USA DENTAL ASSISTANT CONTEST

RADIOGRAPHIC FAULTS

PLEASE PLACE YOUR ANSWER ON THE ANSWER SHEET

1.	2
2.	3
3.	2
4.	3
5.	3
6.	1
7.	4
8.	4
9.	3
10.	2

SKILLS USA DENTAL ASSISTANT EXAMINATION

IDENTIFICATION OF ERRORS IN A SERIES OF RADIOGRAPHS

CHOOSE THE CORRECT ANSWER AND PLACE THE CORRECT ANSWER ON THE ANSWER SHEET

(These radiographs are not from the same patient or mannequin; they have been processed either manually or automatically)

1. Radiograph #1 exhibits the following:
    A. Film Creasing
    B. Film over processing
    C. Film under exposure
    D. Cone cutting
        1. A & B
        2. A,C & D
        3. All the above
2. Radiograph #2 exhibits the following:
    A. Film Overlapping
    B. Film Elongation
    C. Film Underexposure
    D. Improper horizontal angulation
        1. A & D
        2. A,B & D
        3. All the above

3. Radiograph #3 exhibits the following:
    A. Improper horizontal angulation
    B. Film Foreshortening
    C. Film Elongation
    D. Improper vertical angulation
        1. A & B
        2. B & D
        3. C only
        4. All the above

4. Radiograph #4 exhibits the following:
    A. Film has been processed before it was exposed
    B. Improper angulation
    C. Film has been exposed to light prior to processing
    D. Film has not been processed
        1. A and C
        2. A, C and D
        3. D only
        4. All the above
5. Radiograph #5 exhibits the following:
    A. Film elongation
    B. Improper Vertical Angulation
    C. Improper Horizontal Angulation
    D. Improper processing
        1. A and C
        2. A, B & C
        3. C only
        4. All the above

6. Radiograph #6 exhibits the following:
    A. Film Elongation
    B. Herringbone Effect
    C. Improper Vertical Angulation
    D. Improper Horizontal Angulation
        1. A and C
        2. B and C
        3. C only
        4. All the above
7. Radiograph # 7 exhibits the following:
    A. Film Overexposure
    B. Cone cutting
    C. Improper Vertical Angulation
    D. Improper Processing
        1. A and C
        2. B and C
        3. C only
        4. D only
8. Radiograph #8 exhibits the following:
    A. Over exposure
    B. Under exposure
    C. Improper handling during processing
    D. Improper handling during exposure
        1. A and C
        2. A, B and C
        3. A, B and D
        4. C only
        5. D only

9. Radiograph #9 exhibits the following:

A. Under exposure
B. Film is not washed correctly
C. Over processed
D. Under processed
E. Fixer stain
F. Developer stain

1. A,C, and E
2. B, D and E
3. B and E
4. D and E
5. E only

10 Radiograph #10 exhibits the following:

A. Under exposure
B. Over exposure
C. Over processing
D. Under processing
E. Outdated film use

1. A, and C
2. A, D and E
3. A, C and D
4. A, C,D and E
5. All the above

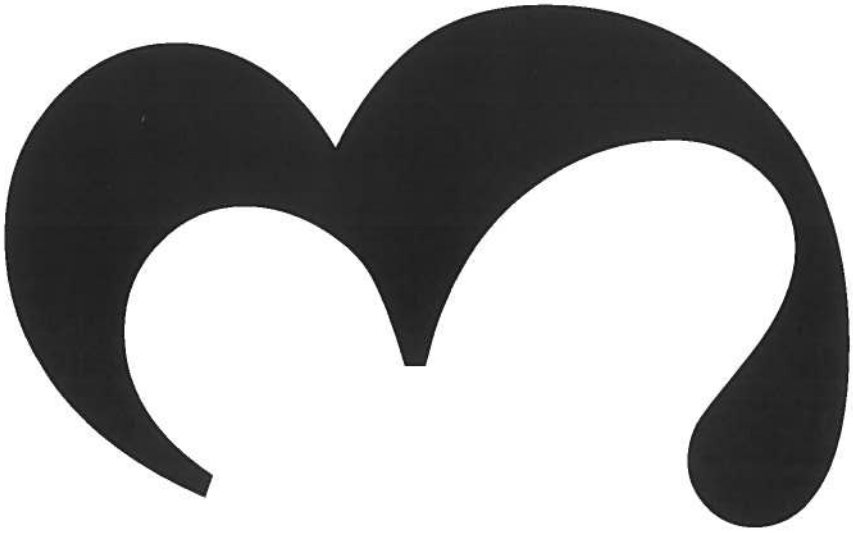

Contestant Number	MOUNTED CORRECTLY	
	YES	NO
Max Rt Molar PA		
Max Rt Pre Molar PA		
RT Molar BW		
RT Premolar BW		
Mand RT Molar PA		
Mand RT Molar PA		
Max Rt Canine PA		
Max Rt Lateral PA		
Max Central PA		
Max Lt Lateral PA		
Max Lt Canine PA		
Max Lt Molar PA		
Max LTMolar BW		
Max LT PreMolar Bw		
Mand LT Molar PA		
Mand LT Pre Molar PA		
Mand Rt Canine PA		
Mand Lateral Central PA		
Mand Lt Canine PA		
TOTAL POINTS 55		

4

#5
22

SKILLS USA DENTAL ASSISTANT CONTEST

ORAL PATHOLOGY IDENTIFICATION

ANSWER SHEET

1. A (Mandibular Tori)
2. B (Cold Sore)
3. C (Caries)
4. C (Oral Thrush)
5. D (all the above)

2012

SKILLS USA DENTAL ASSISTANT CONTEST

ORAL PATHOLOGY IDENTIFICATION

Looking at the pictures given to you, please identify the condition by choosing the correct answer. Place your answer on the answer sheet given, remember to write your number on your answer sheet.

1. Picture #1 is of the following
    a. Mandibular Tori
    b. Maxillary Tori
    c. Mandibular Periodontal Abscess
    d. Maxillary Periodontal Abscess
2. Picture #2 is a picture of Herpes Simplex, this is also known as
    a. Angular Cheilitis
    b. Cold Sores
    c. Fordyce's Spots
    d. None of the above
3. Picture #3 has arrows pointed to an area within the tooth, that is the most common type of oral pathology, it is called
    a. Periodontal abscess
    b. Per apical abscess
    c. Caries
    d. Endodontic Abscess
4. Picture #4 is a common condition that can be easily wiped away. this condition is called
    a. Herpes Simples
    b. Angular Cheilitis
    c. Oral Thrush
    d. Oral HPV
5. Picture #5 is a condition called Angular Cheilitis is often found on what types of patients?
    a. Patients who drool in excess
    b. Patients who have poorly fitting appliances
    c. Patients who may be infirmed
    d. All the above

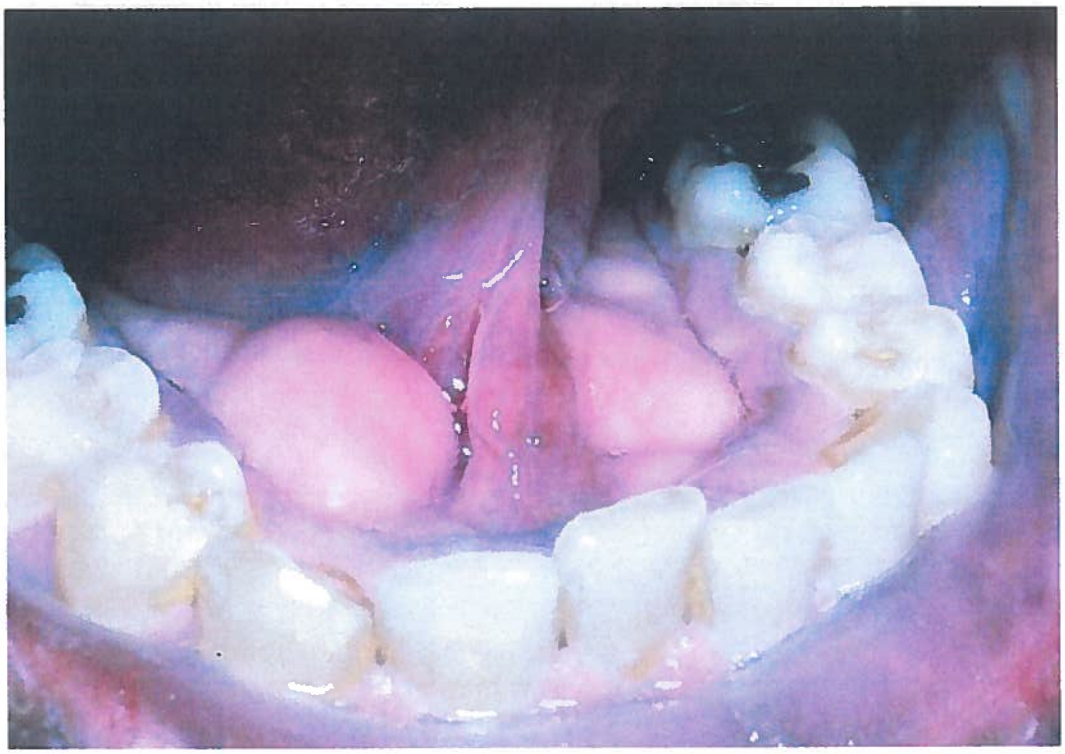

#1

#2

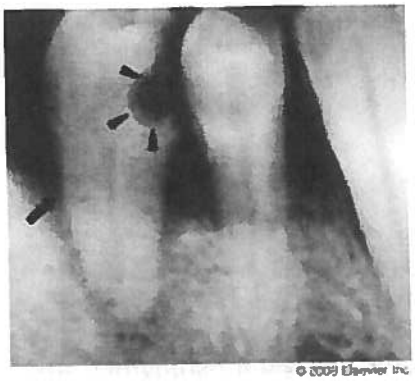

3

#4

5

CONTESTANT #_____

SKILLS USA DENTAL ASSISTANT CONTEST

ORAL PATHOLOGY IDENTIFICATION

1.
2.
3.
4.
5.

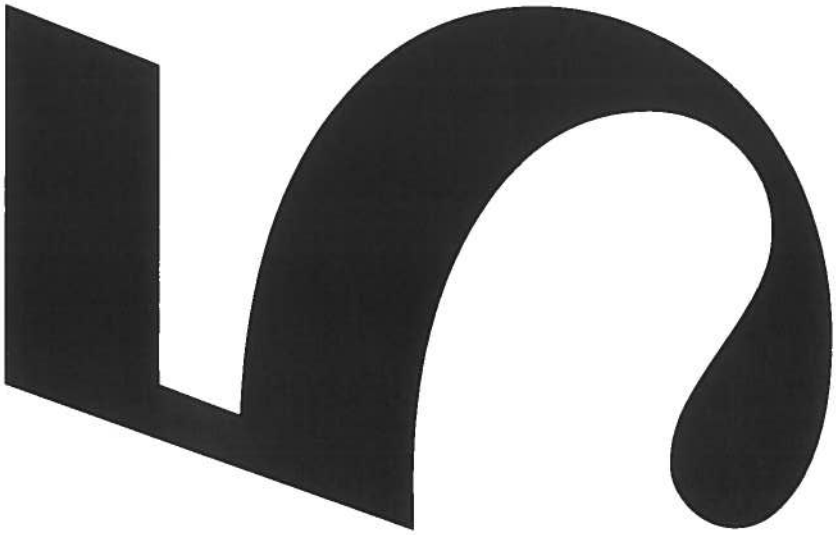

Key

Dental Anatomy

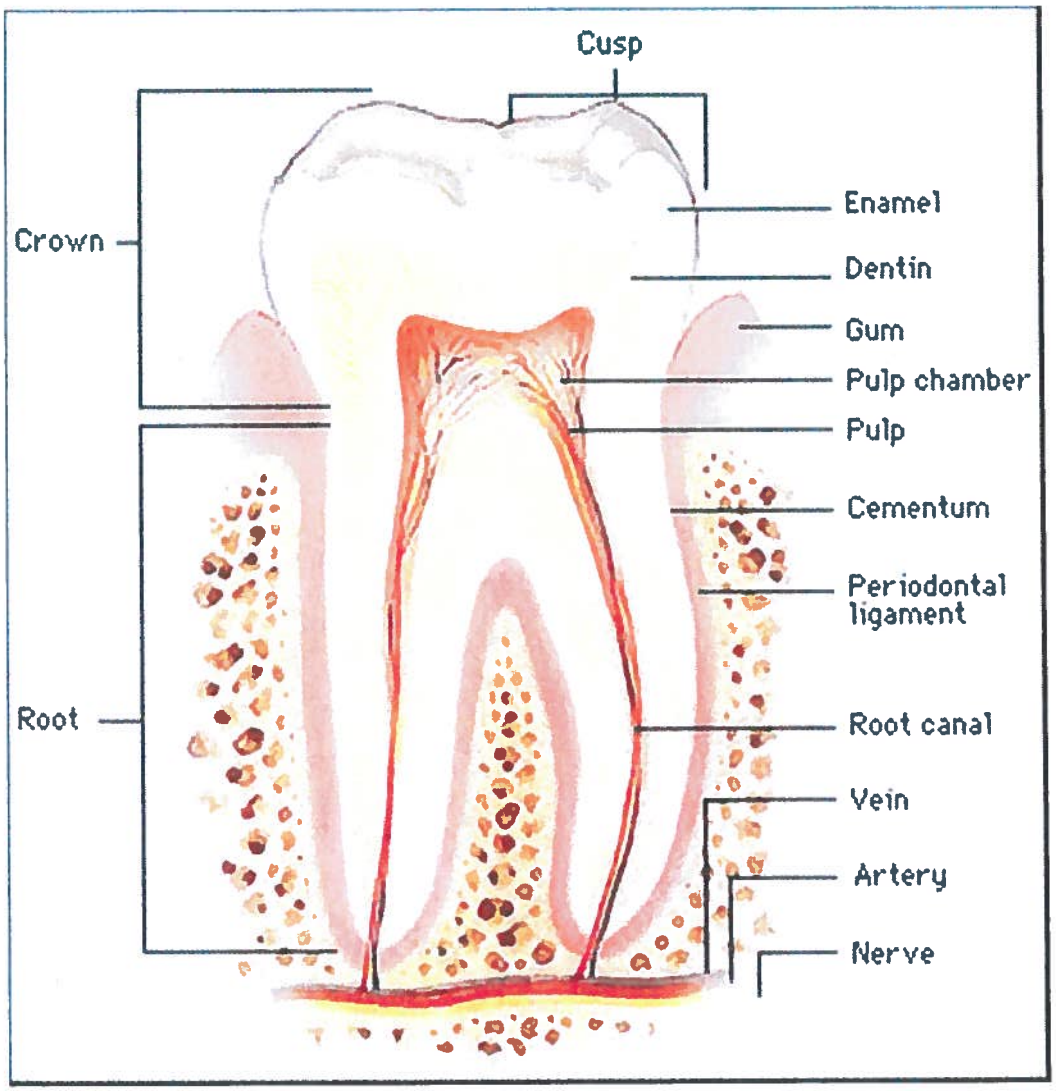

1 Crown	8 Pulp
2 Root	9 Cementum
3 Cusp	10 Periodontal Ligament
4 Enamel	11 Root Canal
5 Dentin	12 Vein
6 Gum / gingiva	13 Artery
7 Pulp Chamber	14 Nerve

Dental Anatomy

Contestant #_____

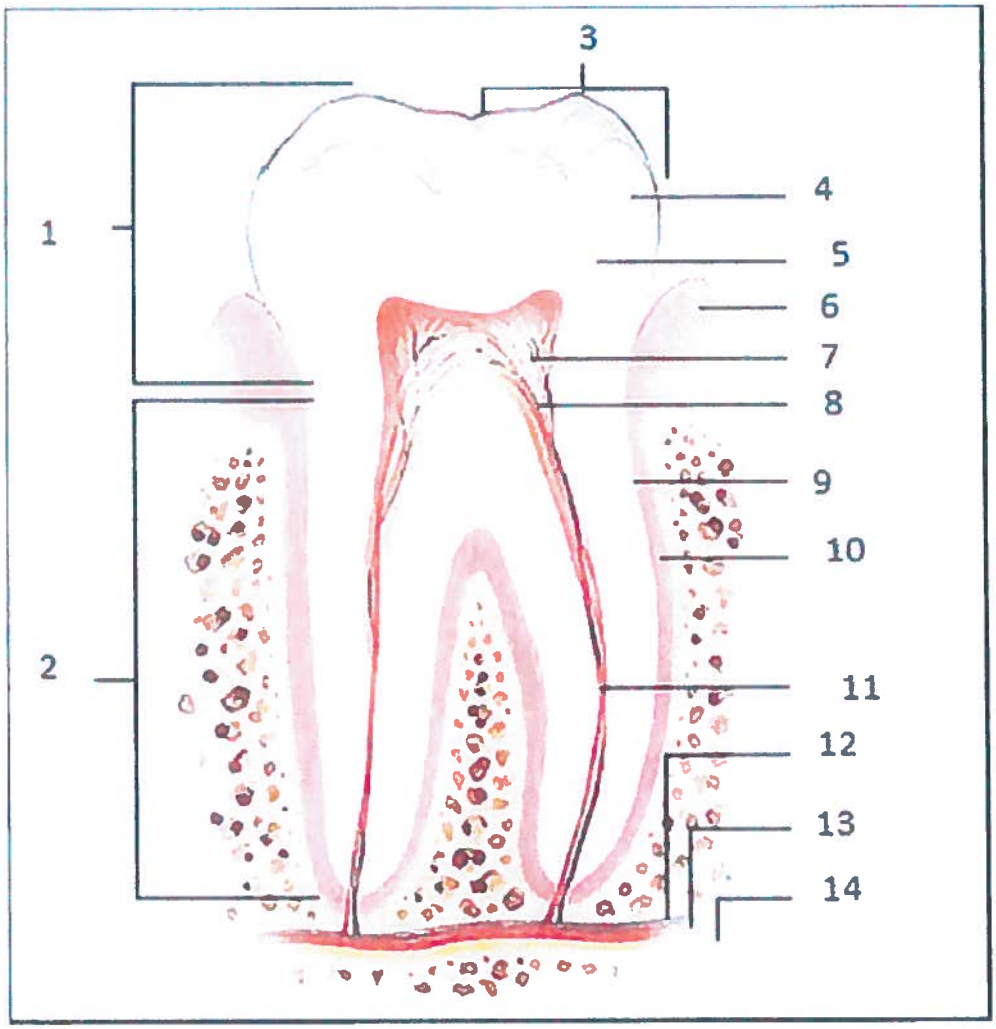

1	8
2	9
3	10
4	11
5	12
6	13
7	14

ص

MULTIPLE-CHOICE QUESTIONS

Complete each question by circling the best answer.

1. The best way to prevent an emergency is to _____.
   a. have the drug kit open and ready for all procedures
   b. know your patient
   c. call the patient's physician before the appointment
   d. take vital signs before seating the patient in the dental treatment area

2. Most medical emergencies occur because a person is _____.
   a. overweight
   b. not taking his or her medication
   c. under stress
   d. not active

3. What member of the dental team is ultimately responsible for a patient's safety in the dental office?
   a. dental assistant
   b. dental hygienist
   c. business assistant
   d. dentist

4. What member of the dental team would most likely be in charge of calling emergency medical services?
   a. dentist
   b. business assistant
   c. dental laboratory technician
   d. another patient

5. Emergency phone numbers should be kept _____.
   a. next to each phone
   b. in each treatment area
   c. in the business area
   d. in the sterilization area

6. What minimum credentials must a dental assistant have to meet emergency care standards?
   a. RN license
   b. CPR and Heimlich certification
   c. EMT certification
   d. DDS

7. The universal sign for someone choking is _____.
   a. wheezing
   b. placement of the hands to the throat
   c. turning blue
   d. screaming

8. An abnormal increase of glucose in the blood can cause _____.
   a. angina
   b. hypoglycemia
   c. seizure
   d. hyperglycemia

9. The drug most commonly used in a medical emergency is _____.
   a. an ammonia capsule
   b. nitroglycerin
   c. epinephrine
   d. oxygen

10. In emergency care, the acronym *AED* represents _____.
    a. automated external defibrillator
    b. auxiliary examination device
    c. acute emergency drill
    d. airway that is externally directed

11. What does the AED provide to the heart?
    a. oxygen
    b. jolt of an electrical current
    c. blood
    d. heat

12. If a patient tells you how he or she is feeling, the patient is referring to a(n) _____.
    a. diagnosis
    b. sign
    c. explanation
    d. symptom

13. When a patient is not responsive to sensory stimulation, he or she is said to be _____.
    a. agitated
    b. unconscious
    c. comatose
    d. paralyzed

14. What is the medical term for fainting?
    a. stroke
    b. seizure
    c. syncope
    d. senile

15. The medical term for chest pain is _____.
    a. angioplasty
    b. angina
    c. angiogram
    d. anemia

16. The medical term for a stroke is _____.
    a. cerebrovascular accident
    b. cardiovascular accident
    c. cardiopulmonary obstruction
    d. obstructed airway

17. The medication a patient with asthma would most commonly have with him or her is _____.
    a. nitroglycerin
    b. insulin
    c. a bronchodilator
    d. an analgesic

18. What kind of allergic response could be life-threatening?
    a. grand mal seizure
    b. anaphylaxis
    c. myocardial infarction
    d. airway obstruction

MULTIPLE-CHOICE QUESTIONS

Complete each question by circling the best answer.

1. The best way to prevent an emergency is to _____.
   a. have the drug kit open and ready for all procedures
   b. know your patient
   c. call the patient's physician before the appointment
   d. take vital signs before seating the patient in the dental treatment area

2. Most medical emergencies occur because a person is _____.
   a. overweight
   b. not taking his or her medication
   c. under stress
   d. not active

3. What member of the dental team is ultimately responsible for a patient's safety in the dental office?
   a. dental assistant
   b. dental hygienist
   c. business assistant
   d. dentist

4. What member of the dental team would most likely be in charge of calling emergency medical services?
   a. dentist
   b. business assistant
   c. dental laboratory technician
   d. another patient

5. Emergency phone numbers should be kept _____.
   a. next to each phone
   b. in each treatment area
   c. in the business area
   d. in the sterilization area

6. What minimum credentials must a dental assistant have to meet emergency care standards?
   a. RN license
   b. CPR and Heimlich certification
   c. EMT certification
   d. DDS

7. The universal sign for someone choking is _____.
   a. wheezing
   b. placement of the hands to the throat
   c. turning blue
   d. screaming

8. An abnormal increase of glucose in the blood can cause _____.
   a. angina
   b. hypoglycemia
   c. seizure
   d. hyperglycemia

9. The drug most commonly used in a medical emergency is _____.
   a. an ammonia capsule
   b. nitroglycerin
   c. epinephrine
   d. oxygen

10. In emergency care, the acronym *AED* represents _____.
    a. automated external defibrillator
    b. auxiliary examination device
    c. acute emergency drill
    d. airway that is externally directed

11. What does the AED provide to the heart?
    a. oxygen
    b. jolt of an electrical current
    c. blood
    d. heat

12. If a patient tells you how he or she is feeling, the patient is referring to a(n) _____.
    a. diagnosis
    b. sign
    c. explanation
    d. symptom

13. When a patient is not responsive to sensory stimulation, he or she is said to be _____.
    a. agitated
    b. unconscious
    c. comatose
    d. paralyzed

14. What is the medical term for fainting?
    a. stroke
    b. seizure
    c. syncope
    d. senile

15. The medical term for chest pain is _____.
    a. angioplasty
    b. angina
    c. angiogram
    d. anemia

16. The medical term for a stroke is _____.
    a. cerebrovascular accident
    b. cardiovascular accident
    c. cardiopulmonary obstruction
    d. obstructed airway

17. The medication a patient with asthma would most commonly have with him or her is _____.
    a. nitroglycerin
    b. insulin
    c. a bronchodilator
    d. an analgesic

18. What kind of allergic response could be life-threatening?
    a. grand mal seizure
    b. anaphylaxis
    c. myocardial infarction
    d. airway obstruction

MULTIPLE-CHOICE QUESTIONS

Complete each question by circling the best answer.

1. The best way to prevent an emergency is to _____.
   a. have the drug kit open and ready for all procedures
   b. know your patient
   c. call the patient's physician before the appointment
   d. take vital signs before seating the patient in the dental treatment area

2. Most medical emergencies occur because a person is _____.
   a. overweight
   b. not taking his or her medication
   c. under stress
   d. not active

3. What member of the dental team is ultimately responsible for a patient's safety in the dental office?
   a. dental assistant
   b. dental hygienist
   c. business assistant
   d. dentist

4. What member of the dental team would most likely be in charge of calling emergency medical services?
   a. dentist
   b. business assistant
   c. dental laboratory technician
   d. another patient

5. Emergency phone numbers should be kept _____.
   a. next to each phone
   b. in each treatment area
   c. in the business area
   d. in the sterilization area

6. What minimum credentials must a dental assistant have to meet emergency care standards?
   a. RN license
   b. CPR and Heimlich certification
   c. EMT certification
   d. DDS

7. The universal sign for someone choking is _____.
   a. wheezing
   b. placement of the hands to the throat
   c. turning blue
   d. screaming

8. An abnormal increase of glucose in the blood can cause _____.
   a. angina
   b. hypoglycemia
   c. seizure
   d. hyperglycemia

9. The drug most commonly used in a medical emergency is _____.
   a. an ammonia capsule
   b. nitroglycerin
   c. epinephrine
   d. oxygen

10. In emergency care, the acronym *AED* represents _____.
    a. automated external defibrillator
    b. auxiliary examination device
    c. acute emergency drill
    d. airway that is externally directed

11. What does the AED provide to the heart?
    a. oxygen
    b. jolt of an electrical current
    c. blood
    d. heat

12. If a patient tells you how he or she is feeling, the patient is referring to a(n) _____.
    a. diagnosis
    b. sign
    c. explanation
    d. symptom

13. When a patient is not responsive to sensory stimulation, he or she is said to be _____.
    a. agitated
    b. unconscious
    c. comatose
    d. paralyzed

14. What is the medical term for fainting?
    a. stroke
    b. seizure
    c. syncope
    d. senile

15. The medical term for chest pain is _____.
    a. angioplasty
    b. angina
    c. angiogram
    d. anemia

16. The medical term for a stroke is _____.
    a. cerebrovascular accident
    b. cardiovascular accident
    c. cardiopulmonary obstruction
    d. obstructed airway

17. The medication a patient with asthma would most commonly have with him or her is _____.
    a. nitroglycerin
    b. insulin
    c. a bronchodilator
    d. an analgesic

18. What kind of allergic response could be life-threatening?
    a. grand mal seizure
    b. anaphylaxis
    c. myocardial infarction
    d. airway obstruction

Multiple Choices

ANSWER KEY

1. **B**
2. **C**
3. **D**
4. **B**
5. **A**
6. **B**
7. **B**
8. **D**
9. **D**
10. **A**
11. **B**
12. **D**
13. **B**
14. **C**
15. **B**
16. **A**
17. **C**
18. **B**

Station 6

Emery

1. B
2 C
3 D
4 B
5 A
6 B
7 B
8 D
9 D
10 A
11 B
12 D
13 B
14 C
15 B
16 A
17 C
18 B

Medical Emergencies in the Dental Office

Contestant # _____

1. _____

2. _____

3. _____

4. _____

5. _____

6. _____

7. _____

8. _____

9. _____

10. _____

11. _____

12. _____

13. _____

14. _____

15. _____

16. _____

17. _____

18. _____

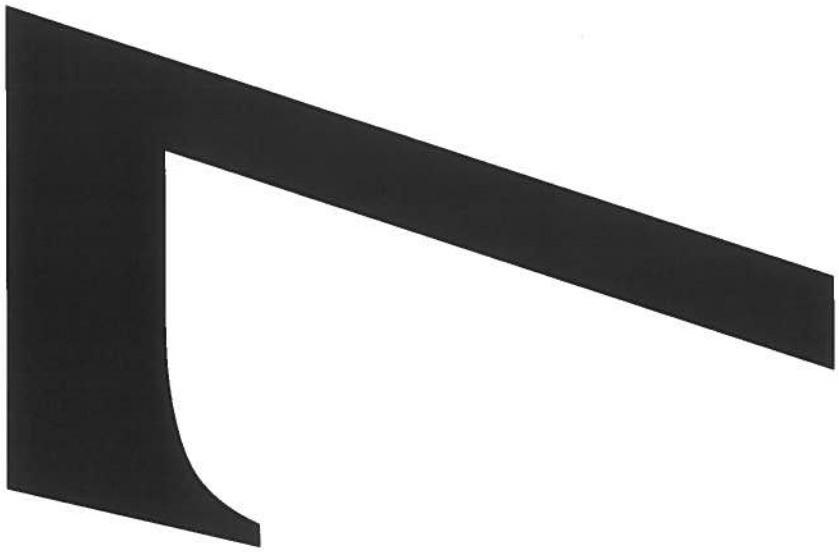

SkillsUSA

Dental Assisting

Instrument/Equipment Identification

Key

Item Number	Item Description/name	Poss. Pts	Points	Comments
1	Football Burnisher	5		
2	Articulate Forceps	5		
3	Cleoid Discoid	5		
4	Mesil Margin Trimmer	5		
5	Mouth Mirror	5		
6	Explorer - Sheppard	5		
7	Hatchet	5		
8	Condenser	5		
9	T-Ball Burnisher	5		
10	Composit Instrument	5		
11		5		
12		5		
13		5		
14		5		
15		5		
16		5		
17		5		
18		5		
19		5		
20		5		
Total points		100		

Contestant Number _____

Give this sheet to the contestant

2014

Instrument/Equipment Identification

Item Number	Item Description/name	Poss. Pts	Points	Comments
1		5		
2		5		
3		5		
4		5		
5		5		
6		5		
7		5		
8		5		
9		5		
10		5		
11		5		
12		5		
13		5		
14		5		
15		5		
16		5		
17		5		
18		5		
19		5		
20		5		
Total points		100		

Contestant Number _____

Give this sheet to the contestant

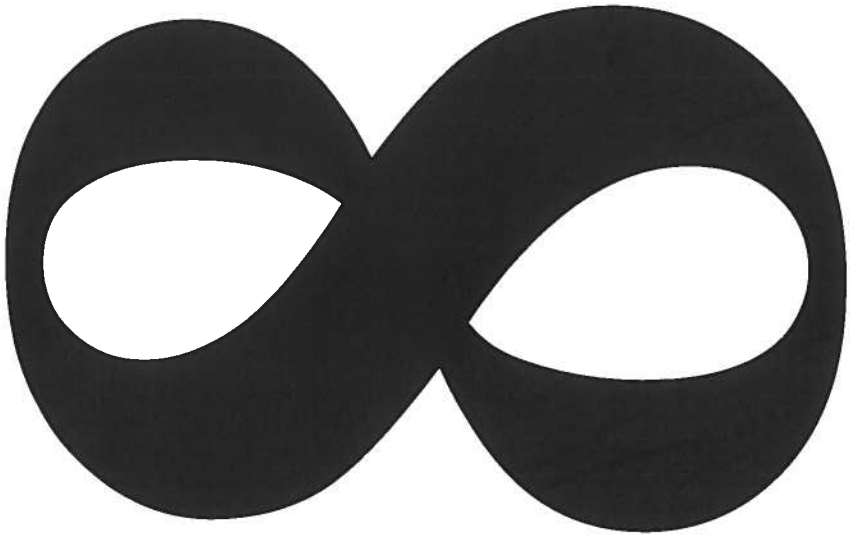

NATIONAL CONTEST
DENTAL ASSISTING

STATION 10
CHAIRSIDE INSTRUMENTS AND HVE PLACEMENT

Task	Poss. Pts.	Points	Comments
Single-handed Transfer and Exchange Retreived instrument from the instrument tray opposite the working end		8	
Held the instrument in the transfer zone, 8 to 10 inches away from the dentist	10	8	38/50
Anticipated the dentist's transfer signal & positioned the new instrument parallel to the instrument in the dentist's hand	10	7	
Retreived the used instrument using the last two fingers	10	7	
Delivered the new instrument to the dentist.	10	8	
Maintained safety throughout the transfer	10	10	
Nonlocking cotton Pliers Transfer Held the contents (cotton pellet) securely by pinching the beaks together	10	10	
Delivered the pliers so the dentist could hold the beaks together	10	10	
Retreived the pliers without dropping the cotton pellet	10	10	

Forceps Transfer Used the right hand to pick up the forceps and hold it for delivery in the position of use.	10	10	50/50
Used the left hand to retrieve the used instrument from the dentist.	10	10	
Delivered the new instrument to the dentist in the appropriate position	10	10	
Returned the used instrument to its proper position on the tray	10	10	
Handpiece Exchange Used the left hand to pick of the handpiece and hold it for delivery in the position of use	10	10	
Used the right hand to take the used instrument from the dentist	10	10	
Delivered the handpiece to the dentist in the appropriate position	10	10	
Air-Water Syringe Transfer Held the nozzle of the air-water syringe in the delivery fingers	10	10	
Retrieved the instrument the dentist was using, then delivered the syringe	10	10	
Scissors Transfer Picked up the scissors and held them near the working are with the beaks slightly open	10	10	
Positioned the handle of the scissors over the dentist's fingers	10	10	
Retrieved the used instrument with the right hand	10	10	
HVE POSITIONING Assumed the correct seated position to accommodate a left-handed or a right-handed dentist	10	10	

Use the proper grasp when holding the HVE	10	9	
Grasped the air-water syringe in the left hand during HVE placement	10	9	
Positioned the HVE correctly for the maxillary left posterior treatment	10	9	
Positioned the HVE correctly for the maxillary right posterior treatment	10	10	44/50
Positioned the HVE correctly for the mandibular left posterior treatment	10	9	
Positioned the HVE correctly for the mandibular right posterior treatment	10	8	
Positioned the HVE correctly for the anterior treatment with lingual access	10	10	
Positioned the HVE correctly for the anterior treatment with facial access	10	10	
TOTAL PTS	350	305	

Contestant Number 502

SkillsUSA Dental Assisting National Contest

HVE POSITIONING

Contestant # _____

Task	Possible Points	Points	Comments
Assumed the correct seated position to accommodate a left-handed or right-handed dentist			
Use the proper grasp when holding the HVE			
Grasped the air-water syringe in the left hand during HVE placement			
Positioned the HVE correctly for the maxillary left posterior treatment			
Positioned the HVE correctly for the maxillary right posterior treatment			
Positioned the HVE correctly for the mandibular left posterior treatment			
Positioned the HVE correctly for the mandibular right posterior treatment			
Positioned the HVE correctly for the anterior treatment with lingual access			
Positioned the HVE correctly for the anterior treatment with facial access			
TOTAL POINTS			

Oral Hygiene Instructions

Contestant # _____

Items Evaluation	Possible Pts	Points
Introduction	10	
Tooth Brush Technique (Bass)	10	
Floss Demonstration	10	
Presentation	10	
Close	10	

10

SkillsUSA

Dental Assisting

Infection Control

Criteria	Poss. Pts	Points	Comments
Washed and dried hands • May use alcohol hand-rub if visible soil • Gloved optional	25		
• Don Gloves • Personal Protective Equipment	25		
Total points	50		

Contestant Number _____

11

Station # KEY

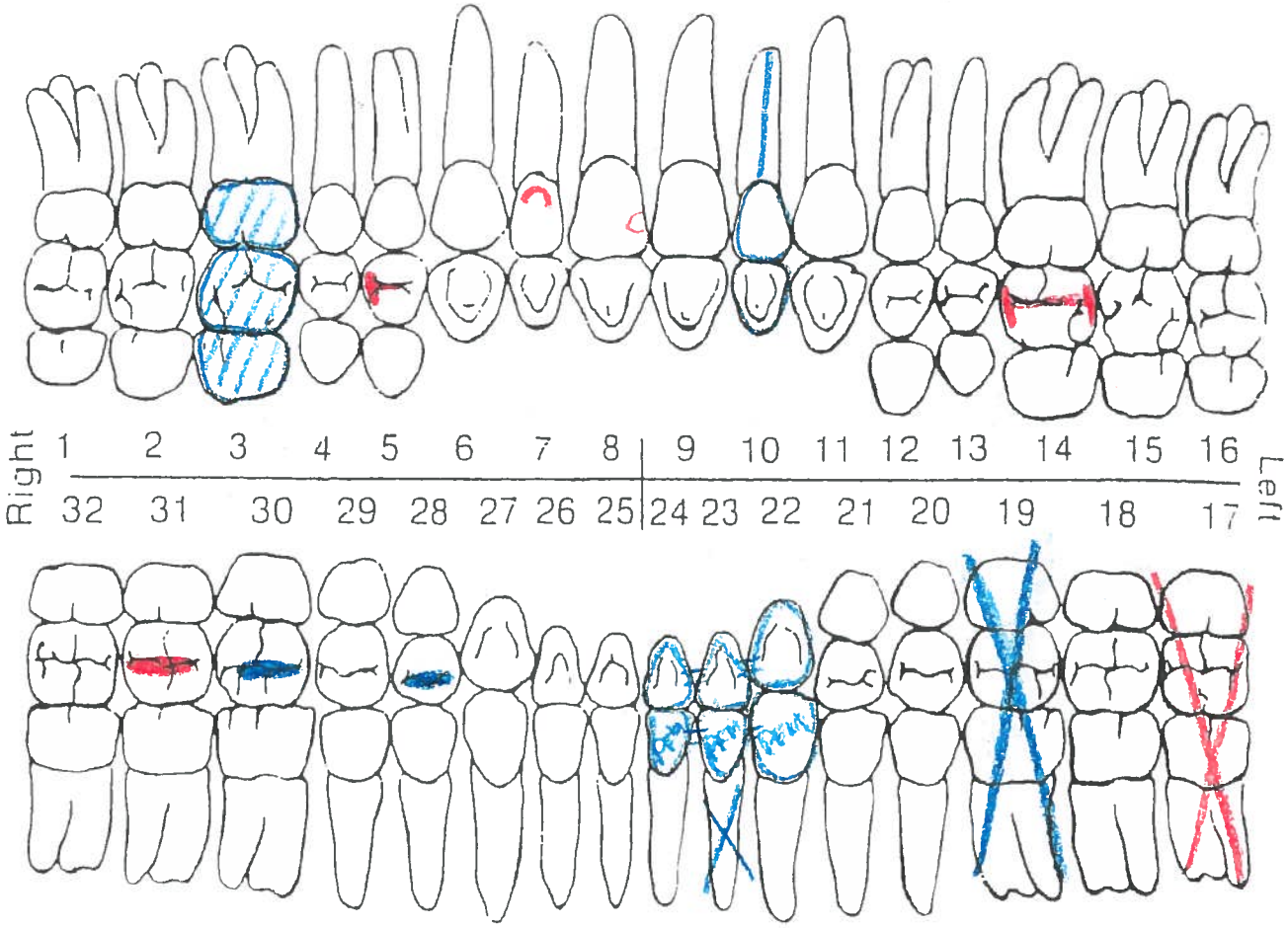

Chart the following:

#3 existing stainless steel crown

#5 needs a DO amalgam

#7 needs a facial V composite

#8 needs a mesial composite

#10 existing root canal and crown

#14 needs a MOD amalgam

#17 needs Extraction

#19 is missing

Existing Porcelain fused to metal bridge from ~~#18 - #20~~ #22 - #24 (~~number~~ #23 missing)

#28 existing occlusal composite

#30 existing amalgam

#31 existing occlusal decay

Anatomical Charting

Contestant #_____

Station #_____

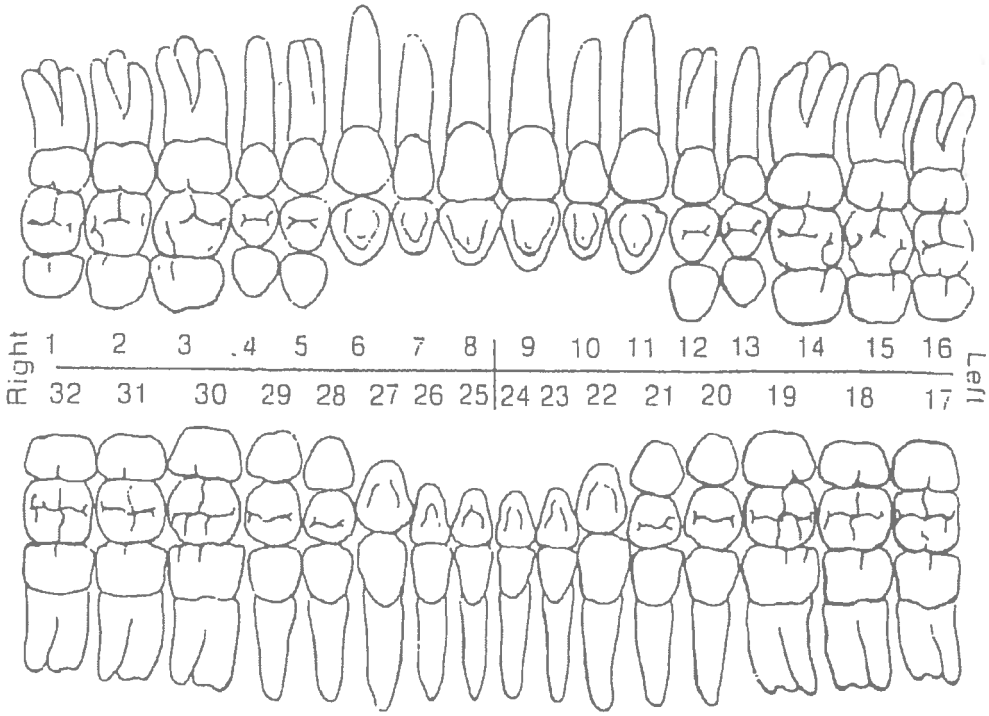

Chart the following

#3 Existing Stainless steel crown

#5 needs a DO amalgam

#7 needs a facial V composite

#8 needs a mesial composite

#10 existing root canal and crown

#14 needs a MOD amalgam

#17 needs extraction

#19 is missing

Existing porcelain fused to metal bridge from #22 - #24 (#23 missing)

#28 Existing amalgam

#31 existing occlusal decay

12

SkillsUSA Key Dental Assisting

Special Instrumentation

Item Number	Item Description/name	Poss. Pts	Points	Comments
1	Periosteal Elevator	5		
2	Mandibular Anterior Forceps	5		
3	Hemostat	5		
4	Crown & Bridge Scissors	5		
5	Wire Bender	5		
6	Rubber dam Hole Punch	5		
7	Bone File	5		
8	Chisel	5		
9	Anterior Rubber Dam Clamp	5		
10	Mandibular Cowhorn forcep	5		
Total points		50		

Contestant Number _____

Give this sheet to the contestant

Special Instrumentation

Item Number	Item Description/name	Poss. Pts	Points	Comments
1		5		
2		5		
3		5		
4		5		
5		5		
6		5		
7		5		
8		5		
9		5		
10		5		
Total points		50		

Contestant Number _____

Give this sheet to the contestant

13

Contestant # _____ Station # 13

Dental Office Supplies

Key

QTY	Order #	Description	Unit Price	Amount
3	102-5421	Criterion PC Gloves Medium	9.99	29.97
5	101-6809	Instrument Trays - Henry Schein - Mauve	8.99	44.95
2 pkg.	712-9285	GUM Stimulator - Sunstar Americas, Inc. Handle and Tip	18.99	37.98
4 pkg	712-0110	GUM Micro Tip Toothbrush - Sunstar Americas, Inc. Soft - Compact	12.99	51.96

Contestant # _____ Station # 13

Dental Office Supplies

QTY	Order #	Description	Unit Price	Amount
3		Criterion PC Medium Gloves		
5		Instrument Trays Henry Schein Mauve		
2 pkg.		GUM Stimulator Sunstar Americas, Inc. Handle & Tip		
4 pkg.		GUM Micro Tip Toothbrush Sunstar Americas, Inc. Soft - Compact		

14

Assist in the Assembly and Administration of Local Anesthesia (Page 1 of 2)

The contestant shall select the necessary setup and prepare an aspirating-type syringe for local anesthetic injection.

The judge will state that an anesthetic syringe needs to be prepared.

Criteria	Poss. Pts	Points	Comments
Gathered necessary instruments and supplies	10		
Inspected the syringe, needle, and anesthetic cartridge	5		
Double checked that the anesthetic carpule is the type indicated by the dentist	5		
Removed the plastic cap from the syringe-end of the needle and screed the needle into the syringe	5		
Retracted the piston using the thumb-ring	5		
Inserted the anesthetic cartridge with the rubber stopper-end first	10		
Gently pulled back on the thumb-rig to be certain the harpoon was securely in place	5		
Loosened the colored plastic needle cap from the injection end of the needle	10		
Total points	55		

Transfer Syringe: Judge will state that the contestant should transfer the syringe behind the patient's head

Criteria	Poss. Pts	Points	Comments
Contestant took appropriate safety precaution measures while transferring the syringe	50		
Total points	50		

Contestant Number _____

Assist in the Assembly and Administration of Local Anesthesia (Page 2 of 2)

The judge will expel contents of carpule from syringe and direct the contestant to disassemble the used syringe

Criteria	Poss. Pts	Points	Comments
Assured that the needle was safely recapped • One handed scoop technique or recapping device	10		
Retracted the piston of the syringe by pulling back on the thumb ring	10		
While still retracting the piston, removed the anesthetic cartridge from the syringe	10		
Unscrewed and removed the needle from the syringe	5		
Disposed of the needle in an appropriate sharps container	5		
Disposed of the carpule in the appropriate waste container	5		
Followed aseptic technique throughout the procedure	10		
Total points	55		

Total Points - Part #1	55	
Total Points – Part #2	50	
Total Points – Part #3	55	

Contestant Number _____

15

NATIONAL CONTEST
DENTAL ASSISTING

STATION ___
CHAIRSIDE INSTRUMENTS AND HVE PLACEMENT

Task	Poss. Pts.	Points	Comments
Single-handed Transfer and Exchange Retreived instrument from the instrument tray opposite the working end	10		
Held the instrument in the transfer zone, 8 to 10 inches away from the dentist	10		
Anticipated the dentist's transfer signal & positioned the new instrument parallel to the instrument in the dentist's hand	10		
Retreived the used instrument using the last two fingers	10		
Delivered the new instrument to the dentist.	10		
Maintained safety throughout the transfer	10		
Nonlocking cotton Pliers Transfer Held the contents (cotton pellet) securely by pinching the beaks together	10		
Delivered the pliers so the dentist could hold the beaks together	10		
Retreived the pliers without dropping the cotton pellet	10		

Forceps Transfer Used the right hand to pick up the forceps and hold it for delivery in the position of use.	10		
Used the left hand to retrieve the used instrument from the dentist.	10		
Delivered the new instrument to the dentist in the appropriate position	10		
Returned the used instrument to its proper position on the tray	10		
Handpiece Exchange Used the left hand to pick of the handpiece and hold it for delivery in the position of use	10		
Used the right hand to take the used instrument from the dentist	10		
Delivered the handpiece to the dentist in the appropriate position	10		
Air-Water Syringe Transfer Held the nozzle of the air-water syringe in the delivery fingers	10		
Retrieved the instrument the dentist was using, then delivered the syringe	10		
Scissors Transfer Picked up the scissors and held them near the working are with the beaks slightly open	10		
Positioned the handle of the scissors over the dentist's fingers	10		
Retrieved the used instrument with the right hand	10		
HVE POSITIONING Assumed the correct seated position to accommodate a left-handed or a right-handed dentist	10		

SkillsUSA Dental Assisting National Contest

CHAIRSIDE INSTRUMENTS

Contestant # _____

Task	Possible Points	Points	Comments
Single-handed Transfer and Exchange Retrieved instrument from the instrument tray opposite the working end			
Held the instrument in the transfer zone, 8 to 10 inches away from the dentist			
Anticipated the dentist's transfer signal & positioned the new instrument parallel to the instrument in the dentist's hand			
Retrieved the used instrument using the last two fingers			
Delivered the new instrument to the dentist			
Maintained safety throughout the transfer			
Handpiece Exchange Used the left hand to pick of the handpiece and hold it for delivery in the position of use			
Used the right hand to take the used instrument from the dentist			
Delivered the handpiece to the dentist in the appropriate position			
Sciccers Transfer Picked up the scissors and held them near the working area with the beaks slightly open			

Positioned the handle of the scissors over the dentist's fingers			
Retrieved the used instrument with the right hand			
TOTAL POINTS			

16

DENTAL ASSISTANT NATIONAL EXAM

IDENTIFICATION OF PROSTHETIC ITEMS AND MATERIALS

AFTER READING QUESTIONS, CHOOSE THE CORRECT RESPONSE, EITHER USING ONE OF THE FOLLOWING ANSERS: TRUE, FALSE, OR BY IDENTIFYING THE ANSWER WITH THE NUMBER THAT CORESPONDING WITH THAT ITEM. PLACE YOUR ANSWER ON THE CORRESPONDING ANSWER SHEET.

PLEASE MAKE SURE TO WRITE YOUR CONTESTANT NUMBER ON THE ANSWER SHEET.

BEAWARE THAT THE QUESTIONS ARE NOT NECESSARILY BEING ASKED IN ITEM NUMERICAL ORDER!

1. ITEM #1- This item is identified as a Full Denture.
   a. TRUE b. FALSE

2. ITEM #2- This item is called a "Snap Mandrel" that is being used with a sandpaper disc.
   a. TRUE b. FALSE

3. ITEM #3- This item is a preliminary maxillary full denture impression that is using a stock tray.
   a. TRUE b. FALSE

4. ITEM #4- This item is called a Full Maxillary Denture.
   a. TRUE b. FALSE

5. ITEM #1 - This item is also called a precision partial.
   a. TRUE b. FALSE

6. ITEM #5- This item is a partially prepared whitening tray.
   a. TRUE b. FALSE

7. ITEM#6- This item is a preliminary impression using Poly Vinyl Siloxane impression material.
   a. TRUE b. FALSE

8. ITEM #7- This item is a relined denture.
   a. TRUE b. FALSE

9. ITEM #8- This item is a "Heatless Mizzy Wheel".
   a. TRUE b. FALSE

10. ITEM#9- This item is a type of impression wax.
    a. TRUE b. FALSE

11. ITEM #10- This item is a type of temporary crown.
    a. TRUE b. FALSE

12. ITEM #6- This item is an impression that includes a bite registration.
    a. TRUE b. FALSE

13. ITEM #9- This item is "softened" by placing it directly into the mouth .
    a. TRUE b. FALSE

14. ITEM #4 –This item can be used in a contra angle handpiece.
    a. TRUE b. FALSE

SkillsUSA Dental Assisting National Contest
Prosthetic Materials and Devices
Answer Sheet

Contestant # _____

1. _____

2. _____

3. _____

4. _____

5. _____

6. _____

7. _____

8. _____

9. _____

10. _____

11. _____

12. _____

13. _____

14. _____

SkillsUSA
2015 Contest Projects

Diesel Equipment Technology

Click the “Print this Section” button above to automatically print the specifications for this contest. Make sure your printer is turned on before pressing the button.

Station # 2 Live Engines
2015
THIS IS A LIVE ENGINE STATION.

You will be performing maintenance task and inspections as well as accessing fault codes with the computer and following diagnostic procedures.
Complete the task in the order given below under Contestant Task.

The equipment in this station is in the shop for repairs due to an aftertreatment and performance problem.

Contestant Task:

1. Record the engine serial number_____

2. Record the complete engine model name_____

3. Ensure the engine is ready to start, report any problems.

4. Name the Aftertreatment components point out by your judge

5. Check for active faults.
   Record any active codes_____

6. Locate Guided troubleshooting tree for any active codes, follow the tree.

7. Locate circuit on wiring diagram of active fault component.

8. Describe to the Judge the failure mode.

9. Make required repairs.

10. Describe how OBD panel light must be extinguished

11. Clear all fault codes

12. Complete SCR DEF Leak test task with INSITE

4. Technician A says that the Primary Brake Shoe in a Cam Brake assembly is the Brake Shoe that engages first when looking at the Wheel Rotation.
   Technician B says that the Primary Shoe could be located on the Top or Bottom. It depends on Cam Location at the Wheel assembly and the Wheel Rotation.

   Who's Correct?

   A) Technician A only
   B) Technician B only
   C) Both Techs A and B
   D) Neither Tech A or B

5. Technician A says that Cam Brake performance is affected by the heat expansion of the Brake Drum and can create Brake Fade.
   Technician B says that a Disc Brake is unaffected by heat as the Disc Rotor expansion as it gets hot does not create a Brake Fade condition.

   Who's Correct?

   A) Technician A only
   B) Technician B only
   C) Both Techs A and B
   D) Neither Tech A or B

6. A Brake Spider that is used on a Cam Brake can be _____ to the axle.

   A) Bolted
   B) Welded
   C) Either Bolted or Welded
   D) None of the Above

7. What is the A/L Factor for a Wheel-End Brake with a Type 30 Brake Chamber and a 6.00" ASA?

   A) 36
   B) 5.0
   C) 50
   D) 180

8. Air Brake Chambers are specified by _____ for a particular Brake and Axle load.
   A) Chamber size
   B) Weight
   C) Length
   D) Deceleration Ratios

9. During a PM inspection a Technician has to ensure the foundation brakes are applying properly. To check that he/she must_____.

   A) Measure applied brake stroke
   B) Measure free travel
   C) Make sure the park brake chamber has air pressure
   D) All of the above

10. To check adjustment of any S-Cam brake the Technician must first _____.

    A) Raise the vehicle
    B) Secure the wheels with chocks if a parking brake chamber is on that brake being checked.
    C) Build up the air system pressure
    D) Release the parking brakes

11. A Technician is performing a brake stroke check on a truck with S-Cam Brakes and a Type 30 Standard Stroke Air Brake Chamber. What is the maximum allowable applied stroke for that Brake Chamber?

    A) 1.5"
    B) 2.5"
    C) 2.0"
    D) 3.0"

12. Automatic Slack Adjusters (ASA's) if properly setup will maintain a specific Brake Lining to Brake Drum clearance. If the ASA is not properly setup at installation it can cause _____.

    A) Excessive brake lining wear
    B) Excessive brake applied stroke
    C) Vehicle to pull when that brake is applied
    D) Reduced or excessive brake free stroke
    E) All of the above

13. If brake linings have been contaminated with oil, grease, or hydraulic fluids, they must be replaced. The frictional characteristics of the brake lining have been altered and cannot be returned to their original designed condition. This statement is:

    A) True
    B) False
    C) False-Brake linings can be used if properly cleaned
    D) False-Brake linings can be used if baked clean and still have 50% brake lining left.

14. Technician A says that as long as a Brake Drum meets a minimum inside diameter it is acceptable to reuse during a brake reline.
    Technician B says that a Disc Brake Rotor should be replaced after it has worn out two sets of Disc Brake pads.
    Who's Correct?

    A) Both Technicians A and B
    B) Neither Technician A or B
    C) Technician A only
    D) Technician B only

15. Brake Linings _____

    A) Are spec'd for the application of the Axle Load
    B) Are worn out when the lining gets to a minimum thickness
    C) Are attached to the brake shoe table with rivets
    D) All of the above are correct
    E) None of the above are correct

16. The Anti lock Brake System modulates air pressure in the service Air Brake Chamber to prevent Wheel lockup and prevent over-braking.

    A) True
    B) False

17. What component of the Anti Lock Brake System must be reset when the Wheel Hub is removed from the Axle?

    A) Tooth wheel
    B) ECU
    C) Sensor
    D) Modulator Valve

18. The ABS _____ Valve has two electrical Solenoids and two Check Valves.

    A) Relay
    B) Check
    C) Modulator
    D) Quick release

19. The ABS _____ is a press fit on to the Wheel Hub.

    A) Sensor
    B) Tooth wheel
    C) Spring Clip
    D) Sensor block

20. The ABS Sensor must be located within a very close distance to a Wheel Hub component to function. When it is operating the Sensor produces a _____ voltage.

    A) DC
    B) AC

Total Correct Answers x 2.5 points each = _____

Judges Initials _____

2015

Score Sheet Live Diesel Engine Diagnostic - Test Station 2

Total Number of Possible Points = 100

Contestant # _____ Time _____

Task	Points Possible	Required Steps to Get Points	Points Awarded
1	2	Recorded engine serial number correctly	
2	2	Recorded Engine Service Model	
3`	2	Checked oil level	
	2	Checked coolant level	
4	6	Contestant correctly ID the aftertreatment components DPFcan, DOCcan, SCRcan, SCR Dosing Valve, SCR DEF Pump, Outlet NOx Sensor	
5	4	Connect Laptop to the Engine ECM	
	4	Navigated laptop to active diagnostic codes	
	4	Recorded active fault DPF differential pressure sensor 3134	
6	4	Located troubleshooting procedures - right clicked on fault code	
	2	Selected correct Service Model ISX15 CM2350 101	
	4	Located troubleshooting steps	
7	4	Located circuit on wiring diagram	
	4	ID correct terminals to perform voltage test	
	4	ID correct terminals to perform state change to fault 3133	
	4	Used proper test leads where required	
8	8	Followed troubleshooting tree, Each step and test was correctly done	
	2	Contestant described failure mode properly, low voltage	
	6	Proper use of Multimeter and settings	
	4	Removed and install connector correctly	
9	4	Contestant Properly replaced component focus on lines	
10	4	Contestant described Mil lamp and requirements to extinguish from Insite	
11	4	Contestant cleared codes	
12	4	Navigated to engine test screen selected leak test for SCR DEF	
	4	Completed SCR DEF leak test	
	4	Student worked safely	
	4	Contestant demonstrated a professional attitude	

100 Total Possible Points

Total Points Scored _____

SkillsUSA
V I C A

2015 DIESEL SKILLS
JUDGES INSTRUCTIONS
Station # 3

1) THIS IS A BASIC ELECTRICAL TEST CONSISTING OF MARKER LIGHTS, TURN SIGNAL, BRAKE LIGHT AND STARTER SYSTEMS.

2) THE SCHEMATIC LOCATED ON EACH TEST BOARD IS FOR THE LIGHT SYSTEM ONLY (STOP, TAIL, TURN AND MARKER LIGHTS). THE SCHEMATIC DOES NOT INCLUDE THE STARTER SYSTEM.

3) YOU WILL NEED TO DEMONSTRATE YOUR ABILITY TO USE THE "DVOM" WHILE DIAGNOSING THE PROBLEMS LISTED.

4) THERE IS A JUMPER WIRE PROVIDED FOR YOU TO USE, YOU DO NOT NEED TO USE IT TO DIAGNOSE THE PROBLEMS ON THE BOARD. PLEASE USE CAUTION IF YOU USE A JUMPER WIRE. THE JUDGE MAY STOP YOU IF YOU WILL CAUSE A SHORT CIRCUIT AND POINTS MAY BE DEDUCTED FROM YOUR SCORE IF YOU CAUSE A SHORT.

5) YOU ARE NOT REQUIRED TO REPAIR ANY PROBLEM YOU HAVE DIAGNOSED.

6) YOU HAVE 30MINUTES TO COMPLETE THIS TEST. SOMEONE WILL GIVE YOU A 5-MINUTE WARNING NEAR THE END OF THE SESSION.

7) NO TALKING DURING OR AFTER THE TEST. AFTER YOU ARE FINISHED, GIVE YOUR CLIPBOARD WITH THE TEST TO THE JUDGE AND RETURN TO YOU CHAIR.

8) FOLLOW ALL SAFTEY PRECAUTIONS AT ALL TIMES.

2015 DIESEL SKILLS STATION #3

Contestant Number _____ **Score** _____

1. Diagnose failed ICC lamps on the park light circuit. Describe problem found.

2. Diagnose turn signals. Describe problem found.

3. Diagnose brake lights. Describe problem found.

4. Diagnose starter system. Describe problem found.

5. Measure and record the resistance between test point A and test point B.

6. If a short occurs at the location shown in below diagram,
   A. the fuse will usually blow
   B. the current will stop flowing
   C. the load will not shut off
   D. the wire will not be able to carry the current

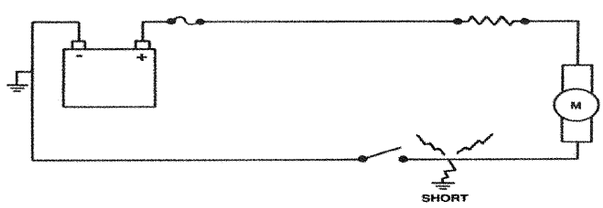

Circuit component schematic symbols for use with questions # 7 through # 9.

A. 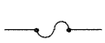 B. 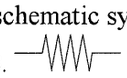 C. 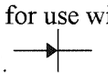 D. E. F.

7. What is the schematic symbol for a normally open switch?

8. What is the schematic symbol for a resistor?

9. What is the schematic symbol for a diode?

10. In the voltage drop test being performed in the illustration below. What is the maximum specification allowed?

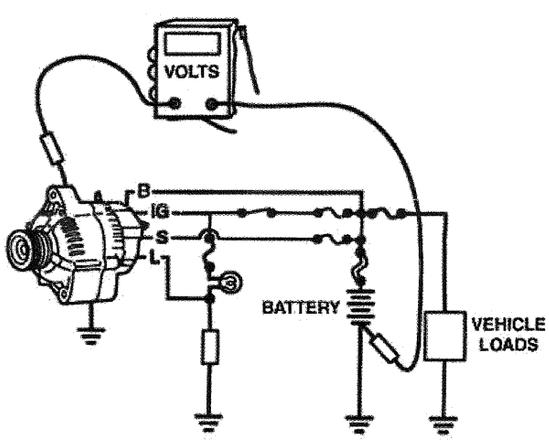

A. .1 Volts

B. .2 Volts

C. .5 Volts

D. 1.0 Volts

Louisville 2015
Heavy Equipment Technician
Station #4

Contestant #:

Note: Safety glasses must be worn at all times.

TOTAL

GAS WELD—(34 POINTS POSSIBLE)

	POINTS
Procedure to open tanks	3
Correctly adjust gauges	3
Light torch and adjust flame	4
Proper handling of torch:	
A) Connection of heat	3
B) Feeding of filter rod	3
Quality of braze and weld	8
Procedure of shutting down tanks and gauges	4
Coiling of hoses and putting equipment back in place	3
Ability to work safely	3

SCORE

SHOP TOOLS---(33 POINTS POSSIBLE)

Attention to instructions & ability to follow orders	10
Ability to complete task	10
Ability to work safety	3
Assemble to standard	10

Improper assembly of components - 1 point each
Improper assembly of (bolts, washers, nuts) – 1 point each

SCORE

ARC WELD—(33 POINTS POSSIBLE)

	POINTS
Ability to turn on and set proper heat range for size of welding rod and work	5
Proper use of protection equipment (welding helmet, gloves, long sleeves, shielding others from ray of arc)	5
Ability to use and protect equipment properly:	
A) Ground - disconnect/connect	4
B) Strike and hold arc	2
C) Angle of welding rod	2
D) Speed and direction of rod travel	2
Quality of welds	5
Shutdown equipment and put away tools	3
Ability to work safely	5

SCORE

Contestant #: _____ **Score:** _____

Station #: 6 **Judge:** _____

1) Using the Service Manual provided at this station, completely assemble the RTLO-16718 Shift Bar Housing.

Using the Service Manual provided, circle the correct answer

2) In the following nomenclature, what does the '9' represent?

'RTLO-20913A'

A. Design Level – Improved Seal System
B. Ratio Set
C. Number of Forward Speeds
D. Nominal Torque Capacity

3) What is the correct torque value for the shift yoke lockscrews?

A. 20-25 lb/ft
B. 8-12 lb/ft
C. 35-45 lb/ft
D. 18-22 lb/ft

4) The filter/regulator assembly regulates the air pressure to:

A. 38-43 PSI
B. 58-63 PSI
C. 48-53 PSI
D. 68-73 PSI

5) After installing the shift bar housing on the main case, the retaining capscrews should be torqued to the following value:

A. 25-35 lb/ft
B. 35-45 lb/ft
C. 45-55 lb/ft
D. 55-65 lb/ft

6) Referring to the power flow section for a 13-speed transmission, how many gearsets are being used while in 2nd gear? (Note: One gearset equals three mating gears)

A. None – Straight through the box
B. 2
C. 3
D. 4

Judge Initials: _____ Contestant #: _____ Notes/Points

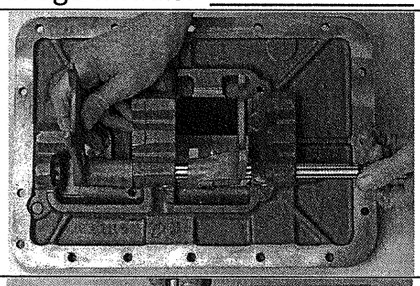	**15 Points** Reverse/Low & Overdrive/Direct shift forks & rail **5** - Install the correct rail **5** - Install Reverse/Low fork **5** - Install OD/Direct fork	
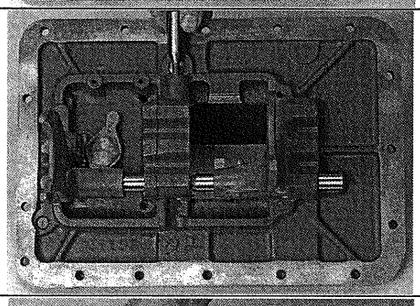	**15 Points** **5** - Slave valve actuating plunger **5** - ¾" interlock balls (steps 7 & 12) **5** - Center rail interlock pin (step 10)	
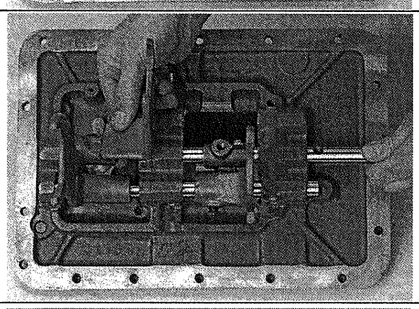	**15 Points** Center shift rail, shift block & 1-2 yoke **5** - Correct rail **5** - Install center shift block **5** - Install 2-3 yoke	
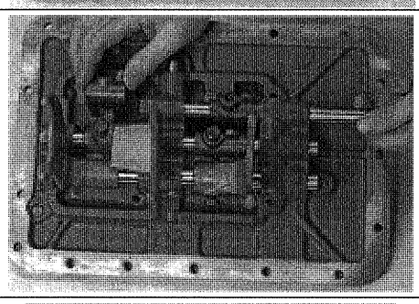	**15 Points** Direct/Overdrive shift rail & shift blocks **5** - Install correct rail **5** - Install OD/Direct shift block **5** - Install "X" shift block	
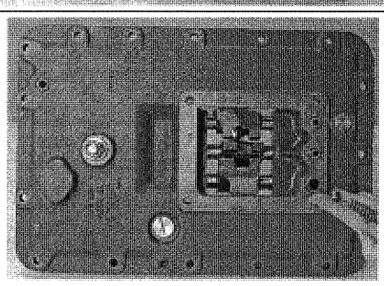	**10 Points** Detent balls and springs Note: All or nothing ** You can tell them not to install the oil trough.	

#	Answer	Page	Points
2	A. Improved Seal System	5	6
3	C. 35-45 lb/ft	149	6
4	B. 58-63 PSI	40	6
5	B. 35-45 lb/ft	105	6
6	D. 4	28	6

MERITOR SkillsUSA

SkillsUSA Diesel Equipment Technology Competition-2015

Drive Axle

Station 7

Contestant's Number _____

Written Axle Test Station Number_____

Total Score for Written Test_____

Written Test – Drive Axle Station All Correct Answers 1-12 = 4 Points
Question 13 = 2 Points
Possible 50 Points
*****Use the Supplied Information at the Written Axle Station you are assigned to answer the below questions *****
Circle your Answer after the Question

1. ***Technician A*** **says that a Standard Single Drive Axle has equal traction to both Wheels and both Wheels will pull provided both Wheels have the same available traction to the pavement.**
   Technician B **says that if one Wheel looses available traction to the pavement the vehicle will cease to pull itself.**
   Who is Correct? (circle the correct answer)
   A) Technician A Only
   B) Technician B Only
   C) Both Technicians A & B
   D) Neither Technicians A or B

2. **To mathematically calculate a Gear Ratio of _____, the Gear Set would have 7 Drive Gear Teeth and 45 Driven Gear Teeth.**
   (circle the correct answer)
   1) 6.14
   2) 3.15
   3) 6.43
   4) 1.55

3. **What component of a Tandem Rear Drive Axle allows the Axles to Pull the Vehicle and still allows for Speed Differences between both Axles?**
(circle the correct answer)
   5) **Ring and Pinion Assembly**
   6) **Main Differential Assembly**
   7) **Inter Axle Differential Assembly**
   8) **No Spin Assembly**

4. ***Technician A*** **says that a Tandem Drive Axle Vehicle with Standard Drive Axles and No Supplemental Traction Devices Engaged has equal traction to All Wheels.**
Technician B **says that a Tandem Drive Axle Vehicle with Standard Drive Axles and No Supplemental Traction Devices Engaged has Traction to the Rear Drive Axle Only?**
Who is Correct? (circle the correct answer)
   A) Technician A Only
   B) Technician B Only
   C) Both Technicians A & B
   D) Neither Technician A or B

5. **A Meritor Model MS2114X5DBBNQ Drive Axle :**
(circle the correct answer)
   A) Has a GAWR of 21K pounds
   B) Is a Single Rear Drive Axle
   C) Has a .500/.510" Axle Wall Housing Thickness
   D) All of the above

6. ***Technician A*** **says that the Drive Axle Carrier provides the Final Gear Ratio Reduction in a Truck Drive Train.**
Technician B **says that the Final Gear Reduction in a Truck can be two different Ratio's if the Drive Axle is equipped with a Two Speed Axle.**
Who is Correct? (circle the correct answer)
   A) Technician A Only
   B) Technician B Only
   C) Both Technician A & B
   D) Neither Technician A or B

7. One component is necessary in a Tandem or Tridem Drive Axle configuration that is not needed in a Single Drive Axle.
What is that component? (circle the correct answer)

A) Lube Pump
B) Inter Axle Differential Assembly
C) Driver Controlled Differential Lock Assembly
D) Thru Shaft Assembly

8. The Lube Pump carries lube from the Axle Housing to what component? (circle the correct answer)

A) Differential Case Bearings
B) Inter Axle Differential Assembly
C) Thru Shaft Assembly
D) None of the above

9. The Lube Pump on a Forward Drive Axle is installed to Help Prevent?
(circle the correct answer)

A) Main Differential Spinout
B) Inter Axle Differential Spinout
C) Make the Carrier operate cooler
D) Pump oil through the external Oil Filter

10. The <u>PRINCIPAL</u> purpose of the Inter Axle Differential (IAD) is?
(circle the correct answer)

E) Provide equal traction to both drive axles
F) Provide differentiation in wheel speeds between axles
G) Power the Forward Differential Carrier
H) All of the above

11. ***Technician A*** **says the Inter Axle Differential is normally locked in or engaged by a dash mounted pneumatic switch.**
Technician B **says that when the Inter Axle Differential is engaged that both the Forward and Rear Drive Axles are rotating at the same speed and no speed differentiation is permitted between the two Axles.**

Who is correct? (circle the correct answer)

A) Technician A only
B) Technician B only
C) Both Technician A & B
D) Neither Technician A & B

12. **A Truck is equipped with a Drive Axle with DCDL.**
Technician A says that one of the two Axle Shafts in the Axle has two sets of Splines and one is longer than the other.
Technician B says that when the DCDL is engaged that neither wheel on that axle should be slipping or damage to the DCDL Collar and Axle Shaft can occur.

Who is Correct? (circle the correct answer)

A) Technician A
B) Technician B
C) Neither Technician A or B
D) Both Technicians A & B

13. **A truck is being driven straight down the road with all wheels having equal speed. At this time, if the IAD (Inter Axle Differential) is engaged will damage occur?**

Yes _____ No_____

Correct Answers 1-12 x 4 Points each = _____
Correct Answer 13 x2 points = _____
Total Written Test Score = _____
Judges Initials_____

STATION 8

2015 Job Interview Station - Objectives

SkillsUSA.

WRITTEN JOB INTERVIEW SKILLS

Students have 15 minutes to fill-out a mock- job application. This activity is designed to prepare students for when they are applying for a job in the diesel technician industry. This allows students the opportunity to:

- Demonstrate the ability to follow written instructions.
- Demonstrate the ability to express personal background and interests.
- Demonstrate the ability to express work experience.
- Demonstrate the ability to express job expectations.
- Demonstrate the ability to express proper working conditions.
- Demonstrate the ability to express interpersonal relationships/self confidence.
- Demonstrate the ability of time management and dealing with conflict.
- Demonstrate the ability to write legibly.

VERBAL INTERVIEW SKILLS

Students have 10 minutes to complete a mock-interview conducted by two diesel industry professionals. This activity is designed to prepare students for when they interview for a job in the diesel technician industry. This verbal interview opportunity gives students the opportunity to:

- Demonstrate ability to express personal background and interests.
- Demonstrate ability to express work experience.
- Demonstrate ability to express job expectations.
- Demonstrate ability to express proper working conditions.
- Demonstrate ability to express interpersonal relationships / self confidence.
- Demonstrate ability of time management and dealing with conflict.
- Demonstrate personal presentation skills (voice tone, eye contact, speaks clearly, appropriate language/grammar, and politeness).

2015 Job Interview Station – Judges Responsibilities

Orientation Judge(s)

Note: There should be at least one orientation judge.

- Give orientation speech at the beginning of each station rotation
- Collect applications and resume - staple together
- Collect Job the ratings sheets from the interview booth judges and match it with the resume/ application.
- Review clarity of the resume – write score on the rating sheet
- Average scores from the 2 interview judges ratings sheet
- Enter score in spreadsheet / On SkillsUSA final form
- Judge clarity of applications
- Keep track of time - Contestant interview lasts no longer than 10 minutes

Interview Booth Judge (s)

Note: There should be two interview booth judges per interview booth. There should be two interview booths requiring a total of 4 judges.

- Interview one student at a time using the Job Interview Station Interview Questions.
- Fill-out the Job Interview Station Ratings Sheet
- Give ratings sheet to Orientation judge

2015 Job Interview Station - Orientation

SkillsUSA.

Interview Orientation – Someone must say this before each round begins.

For Starters, all six contestants sit at tables, pens down.

"The interview station is based on a scenario where you are applying for an apprentice technician job at a John Deere construction dealership.

You will have two tasks.

The first is to fill out an application. You will be judged on the clarity of your application.

Proctors will be present to answer any questions you may have about the application itself.

The second task is to go through a mock interview.

In this, you will be judged on your self presentation and on the depth and maturity of your answers.

Two interviews will be conducted at a time, the remaining contestants will fill out their application.

Do not worry if you haven't completed your application when you are called for your interview.

You will have 20 minutes total in this rotation to complete the application.

Are there any questions?"

Send two contestants to the interview areas.

Remaining four contestants remain at tables to fill out application.

SkillsUSA

APPLICATION FOR EMPLOYMENT

(An Equal Opportunity Employer)

DATE

PLEASE PRINT AND COMPLETE ALL SECTIONS (USE BALLPOINT PEN)

PERSONAL INFORMATION

NAME LAST	FIRST	MIDDLE	CONTESTANT NUMBER

PRESENT ADDRESS NUMBER & STREET	CITY	STATE	ZIP CODE

E-MAIL ADDRESS	CELLULAR TELEPHONE NUMBER	HOME TELEPHONE NUMBER
	( ) -	( ) -

HAVE YOU EVER USED ANOTHER NAME? ☐ YES ☐ NO

IF YES, PLEASE PROVIDE OTHER NAMES USED

HAVE YOU EVER PLED GUILTY OR "NO CONTEST" TO, OR BEEN CONVICTED OF, A MISDEMEANOR OR FELONY? ☐ YES ☐ NO

IF YES, PLEASE GIVE DATE AND DETAILS

(Answering yes to this question does not constitute an automatic bar to employment. Factors such as age and time of the offense, seriousness and nature of the violation, and rehabilitation will be taken into account. Do not include minor traffic citations and arrests or convictions which have been sealed or expunged in answering this question.)

EMPLOYMENT DESIRED

POSITION DESIRED	DATE YOU CAN START	SALARY DESIRED

EDUCATION

SCHOOL LEVEL	NAME & LOCATION (CITY, STATE) OF SCHOOL	GRADUATE?	SUBJECTS STUDIED/MAJOR
HIGH SCHOOL			
COLLEGE			
TRADE, BUSINESS CORRESPONDENCE SCHOOL			

SUBJECTS OF SPECIAL STUDY OR RESEARCH WORK

SPECIAL TRAINING

SPECIAL SKILLS

SkillsUSA.

EMPLOYMENT HISTORY

List your most recent employment first. Resumes will not be accepted in place of a completed application form. Respond completely to all information in this section.

1

NAME & ADDRESS OF PRESENT OR MOST RECENT EMPLOYER

STARTING DATE

LEAVING DATE

JOB TITLE

NAME & TITLE OF SUPERVISOR

DESCRIPTION OF WORK

REASON FOR LEAVING

GENERAL EMPLOYMENT INFORMATION

HAVE YOU EVER BEEN TERMINATED OR ASKED TO RESIGN FROM ANY JOB? ☐ YES ☐ NO

IF YES, PLEASE EXPLAIN THE CIRCUMSTANCES

ARE THERE ANY GAPS IN YOUR EMPLOYMENT HISTORY? ☐ YES ☐ NO

IF YES, PLEASE EXPLAIN

IF YES, PLEASE EXPLAIN

ARE YOU LEGALLY AUTHORIZED TO WORK IN THE U.S.? ☐ YES ☐ NO (PROOF SUFFICIENT TO SATISFY U.S. IMMIGRATION LAWS IS A REQUIREMENT OF EMPLOYMENT)

IF HIRED, CAN YOU FURNISH PROOF THAT YOU ARE OVER 16 YEARS OF AGE? ☐ YES ☐ NO

ARE YOU CAPABLE OF SATISFACTORILY PERFORMING THE ESSENTIAL JOB DUTIES REQUIRED OF THE POSITION FOR WHICH YOU ARE APPLYING? ☐ YES ☐ NO

REFERENCES

Include only individuals familiar with your work ability. DO NOT include relatives.

NAME	RELATIONSHIP	YEARS KNOWN
1.		
2.		

SIGNATURE OF APPLICANT

DATE

2015 Job Interview Station - Interview Questions

SkillsUSA.

Contestant Number:_____

1. Tell me about yourself.

2. What made you decide to pursue the diesel industry for your career?

3. What have been some of your major accomplishments at school or work?

4. What are you looking for in a company?

5. If you could create the perfect job, what would it involve?

6. Tell me about a time when you had difficulty maintaining composure at school or work. How did you handle the situation?

7. What motivates you to succeed in a job?

8. Tell me about an area (work skill or personality trait) where you could use improvement.

9. What separates you from the other students here?

10. What questions do you have for me?

Job Interview Station - Rating Sheet

SkillsUSA

Contestant Number:_____

Score:_____

Evaluation Items	Maximum Points Possible	Points Awarded
Greeting and Introduction	5	
Appearance: Grooming and Posture	15	
Completeness and clarity of resume* Completeness and clarity of application* Maximum of 5 points for resume and 5 points for the application for a total of 10 possible points.	10	
Maturity: Answers to questions	35	
Presentation: Self confidence and persuasiveness	20	
Preparation: Knowledge of position applied for and personal history	15	
	Final Score	
Comments		

2015 Skills USA National Competition – Diesel Equipment
Station #9 – Hydraulic Systems
Test Instructions

Welcome to Station #9 – Hydraulic Systems

On the table you will find a clipboard with the test attached to it, a machine hydraulic schematic, a disassembled hydraulic cylinder, and tools.

The test is comprised of 4 sections:

1. A hydraulic cylinder assembly exercise
2. An on-machine component identification exercise
3. A schematic component identification exercise
4. A written test

During the "on-machine component identification exercise" you will find numbered tags attached to the components on the machine. There are more tags attached to the machine than the total number of components you will be required to identify on your test. Do not move the tags on the machine. This table uses this machine, this table uses this machine, and this table uses this machine.

Be careful when climbing on to, off of, and walking around the machine as the rear access door is open. Always use three points of contact when climbing on and off of the machines.

In the "schematic component identification exercise" you are to use the machine schematic at your table to find the 7 digit CAT part number on the schematic for the component listed in the test.

The hydraulic cylinder is to be assembled using the provided tooling and supplies. The fasteners do not need to be torqued, but should be snug.

Be sure to write your contestant number on the first page of your test. Turn the clipboard over or hand your test to a judge when completed or if the horn sounds, indicating the end of the test period.

You must start with the hydraulic cylinder assembly procedure first. Please read the instructions carefully.

The judges can answer only those questions that relate to the competition procedures, the instructions I am giving you, or the instructions as they appear in your test packet.

Do you have any questions?

When the horn sounds, you may begin. Good Luck!

Scoring the Hydraulic Cylinder Assembly Procedure

There are 12 assembly steps worth 3 points each, for a total of 36 points and 4 points for safety, each step will be graded on the following criteria:

1) Contestant must inspect each part, prior to installation.
2) Each part must be properly assembled in the correct orientation.
3) Each part must have sufficient lubrication necessary for proper assembly and be free of damage (only if contestant damages a part, deduct a point).

**note: some parts may have and/or gain slight damage during the duration of the contest, please try to reuse damaged parts, due to limited parts availability*

Station 9

Skills USA Hydraulics
2015 National Competition

I.D. are worth 2 pts. each for possible 30 pts, -2 pts. if no contestant number, -4 pts. for safety

Tag Number	7 Digit CAT Part Number	Component
12	375-7845	Lift Cylinder
8	373-8423	Travel Motor
3	XXX	Loader Control (Joy Stick)
7	149-0686	Pilot Accumulator
5	293-5711 OR 293-5712	*Tilt Cylinder*
4	423-0086	Implement Pump
13	345-4581	Hydraulic Oil Reservoir
1	373-6959	Implement Control Valve
14	XXX	Hydraulic Pump Suction Hose
10	346-5576	Hydraulic Oil Filter
11	XXX	Work Tool Coupler
17	345-3473	Hydraulic Oil Cooler
16	388-7970	Auxiliary Hydraulic Quick Couplers
20	341-7625	Hydrostatic Pump
18	258-2577	Hydraulic Cooling Fan

30

* These items have two (2) possible correct answers, only one is needed.

Multiple Choice are worth 2 pts. each for possible 30 pts, -2 pts. if no contestant number

Multiple Choice

1 - B
2 - B
3 - B
4 - C
5 - C
6 - B
7 - A
8 - D
9 - D
10 - C
11 - A
12 - C
13 - D
14 - C
15 - A

30

Cylinder As. Procedure 12 step process are worth 3 pts. per step for possible 36 pts. and 4 pts. for safety, -2 pts. if no contestant number

* test to be scored by judge

Skills USA
2015 National Skills Competition

Contestant Number_____

Directions: Circle the correct response for each item.

1. What occurs in a hydraulic system if fluid flow is restricted?

a. Fluid flow rate and pressure decrease.
b. Fluid flow rate decreases and pressure increases.
c. Fluid flow rate and pressure increase.
d. Fluid flow rate increases and fluid pressure deceases.
e. None of the above.

2. A charge pump supplies flow to the outlet of a larger pump to prevent cavitation.

a. True
b. False

3. An orifice in an oil passage causes:

a. A lower oil pressure on the downstream side of the orifice when there is no oil flow.
b. A lower oil pressure on the downstream side of the orifice when there is oil flow.
c. A lower oil pressure on the downstream side of the orifice at all times.
d. None of the above

4. What is the most reliable indication of an excessively worn variable displacement hydraulic pump?

a. Low system pressure
b. Low oil temperature
c. Excessive case drain flow
d. A steady high-pitched whining sound

5. How much pressure is necessary within a hydraulic system to support a 1,000 pound load if the area of the piston supporting the load is 5 square inches?

a. 0.05 pounds per square inch.
b. 20 pounds per square inch.
c. 200 pounds per square inch.
d. 2,000 pounds per square inch.
e. None of the above.

6. To increase the flow rate of a fixed displacement pump, which of the following must be done?

a. Increase pressure relief valve settings.
b. Increase the drive speed or RPM of the pump.
c. a and b.
d. None of the above.

14. What type gas should normally be used to charge an accumulator?

a. Oxygen
b. Compressed air
c. Nitrogen
d. Acetylene

15. A purpose of the crossover relief valve in a hydraulic motor circuit is to:

a. absorb shock when a hydraulic motor is started, stopped, or stalled
b. heat up the hydraulic oil
c. limit the maximum flow to the motor
d. to serve as a back-up in case the pump compensator fails

Station 9

Skills USA Hydraulics
2015 National Competition

Contestant Number _____

Component Identification: On the machine, match the tag number attached to the component using the list below. There are more tags on the machine than components listed. Write the tag number next to the component name. Using the schematic for the 279D XPS, write the 7 digit CAT part number for each component. *These items have two (2) possible correct answers, only one is needed.*

Tag Number	7 Digit CAT Part Number	Component
		Lift Cylinder
		Travel Motor
	XXX	Loader Control (Joy Stick)
		Pilot Accumulator
		Tilt Cylinder
		Implement Pump
		Hydraulic Oil Reservoir
		Implement Control Valve
	XXX	Hydraulic Pump Suction Hose
		Hydraulic Oil Filter
	XXX	Work Tool Coupler
		Hydraulic Oil Cooler
		Auxiliary Hydraulic Quick Couplers
		Hydrostatic Pump
		Hydraulic Cooling Fan

* These items have two (2) possible correct answers, only one is needed.

Skills USA
2015 National Skills Competition

Contestant Number_____

Directions: Circle the correct response for each item.

1. What occurs in a hydraulic system if fluid flow is restricted?

a. Fluid flow rate and pressure decrease.
b. Fluid flow rate decreases and pressure increases.
c. Fluid flow rate and pressure increase.
d. Fluid flow rate increases and fluid pressure deceases.
e. None of the above.

2. A charge pump supplies flow to the outlet of a larger pump to prevent cavitation.

a. True
b. False

3. An orifice in an oil passage causes:

a. A lower oil pressure on the downstream side of the orifice when there is no oil flow.
b. A lower oil pressure on the downstream side of the orifice when there is oil flow.
c. A lower oil pressure on the downstream side of the orifice at all times.
d. None of the above

4. What is the most reliable indication of an excessively worn variable displacement hydraulic pump?

a. Low system pressure
b. Low oil temperature
c. Excessive case drain flow
d. A steady high-pitched whining sound

5. How much pressure is necessary within a hydraulic system to support a 1,000 pound load if the area of the piston supporting the load is 5 square inches?

a. 0.05 pounds per square inch.
b. 20 pounds per square inch.
c. 200 pounds per square inch.
d. 2,000 pounds per square inch.
e. None of the above.

6. To increase the flow rate of a fixed displacement pump, which of the following must be done?

a. Increase pressure relief valve settings.
b. Increase the drive speed or RPM of the pump.
c. a and b.
d. None of the above.

7. In a variable displacement piston pump, when the swash plate angle is increased, _____ is increased.

   a. Displacement.
   b. RPM.
   c. Pressure.
   d. a and c.
   e. None of the above.

8. The upstream pressure of a main system relief valve is regulated by:

   a. The upstream pressure only.
   b. The downstream pressure only.
   c. The spring force only
   d. Both a and c

9. Accumulators are used in hydraulic systems to:

   a. Permit the use of smaller pumps.
   b. Provide emergency steering and brakes.
   c. Maintain constant pressure.
   d. All of the above.

10. What two factors affect the amount of fluid pressure required to lift a load?

   a. Input force and the area on which the input force is applied.
   b. Input force and the resulting fluid pressure.
   c. Resisting force of the load and the area on which fluid exerts pressure to support the load.
   d. Maximum fluid pressure and the area on which that pressure is exerted.

11. A single acting hydraulic cylinder has a 6" bore, 3" diameter rod, and 48" stroke, and the system relief valve set at 2500 psi. What is the maximum lifting capacity (in pounds), if pressure is applied to the head end of the cylinder?

   a. 70,650 lbs.
   b. 52,975 lbs.
   c. 68,525 lbs.

12. Pressure in a hydraulic system is generated by _____ to flow.

   a. Acceptance
   b. Immunity
   c. Resistance
   d. Compliance

13. Force = _____ x _____

   a. flow x distance
   b. work x time
   c. pressure x flow
   d. pressure x area

14. What type gas should normally be used to charge an accumulator?

a. Oxygen
b. Compressed air
c. Nitrogen
d. Acetylene

15. A purpose of the crossover relief valve in a hydraulic motor circuit is to:

a. absorb shock when a hydraulic motor is started, stopped, or stalled
b. heat up the hydraulic oil
c. limit the maximum flow to the motor
d. to serve as a back-up in case the pump compensator fails

PM INSPECTION STATION #10 2015 JUDGES SCORING SHEET

Contestant Number _____ Judge Name _____

Total Score _____

(1) Record Contestant Number, (2) Double check your math, (3) Put total score in space ABOVE, and (4) Sign your name in space provided.

Scoring	Value / All or Nothing	Score
Front chambers are type 24	**5 points**	
Front chambers are long stroke	**5 points**	
Rear turbo clamp loose	**10 points**	
Alternator power wire loose	**10 points**	
Belt alignment bad	**10 points**	
Radiator support arm loose	**10 points**	
Governor airline loose / disconnected	**10 points**	
Loose bolt from top of air bag	**10 points**	
5th Wheel slide hose disconnected	**10 points**	
Air line loose on brake chamber A2	**10 points**	
Axle breather loose A3	**5 points**	
Axle breather hose missing A3	**5 points**	
	Subtotal	

SkillsUSA 2015 – Failure Analysis Station #11

You are at the Failure Analysis Station. You will find a total of **three groups** of questions. One of the three groups is **"Parts"** and you are required to identify the cause of the failure on each part. The second group is **"Oil Analysis"** questions that are related to various failure modes. The third group is **"General Knowledge"** questions.

Parts - Group One

- Use supplied parts to answer the following multiple choice questions.
- Inspect each part and determine the type or cause of the failure.
- Circle the answer that best describes the type or cause or the failure.

1. Item "1" is Coolant Test Equipment.-
Which of the tools displayed is the best tool for on sight testing of coolant.

A. Four floating ball tester.
B. Coolant test strips.
C. Refractometer.
D. Float type bulb tester.
E. None of the above

---

2. Item "2" is Tooth Fracture of Idler Gear.

A. Serviceable part. No defect. Return to service.
B. Foreign material damage.
C. Overloading of gear teeth.
D. Oil starvation due to lack of lubricating oil.

---

3. Item "3" is an Upper & Lower Main Bearing Set.

A. Aerated lube oil.
B. Oil starvation / lack of lube.
C. Antifreeze / coolant in lube oil.
D. Insufficient crankshaft end thrust clearance.

---

4. Item "4" is a Ring Set. What is the Primary Cause of Failure?

A. No lube oil for cooling.
B. Over fueling of cylinder
C. Normal wear
D. Air supply contamination

Parts - Group One - Continued

- Use supplied parts to answer the following multiple choice questions.
- Inspect each part and determine the type or cause of the failure.
- Circle the answer that best describes the type or cause or the failure.

5. Item "5" is a Connecting Rod and Piston Assembly

A. Serviceable part. No defect. Return to service.
B. Defective Connecting Rod.
C. Defective Piston.
D. Both B & C.

---

6. Item "6" is a Turbo Charger Oil Feed Line

A. Serviceable part. No defect. Return to service.
B. Defective fitting.
C. Cracked flare / seat.
D. Crushed braided line.

---

7. Item "7" Turbo Compression and Exhaust Wheels. Determine Cause of Failure

A. Engine overspeed
B. Hot engine shutdown
C. Internal engine parts passing through exhaust
D. Air source contaminated

---

8. Item "8" is a Piston

A. Serviceable part. No defect. Return to service.
B. Impact damage to piston skirt
C. Piston pin bushing damage.
D. Dropped valve damage on piston dome.

Parts - Group One - Continued

- Use supplied parts to answer the following multiple choice questions.
- Inspect each part and determine the type or cause of the failure.
- Circle the answer that best describes the type or cause or the failure.

9. Item "3" is a Thermostat & Seal.

A. Serviceable part. No defect. Return to service.
B. Damaged thermostat seal. Do not reuse.
C. Worn thermostat housing. OK to reuse.
D. Both "B" and "C"

10. Item "10" is Push Tubes (Push Rods)

A. Serviceable part. No defect. Return to service.
B. Bent push tube. Do not reuse.
C. Damaged ball end. Do not reuse.
D. Damaged cup end. Do not reuse.

11. Item "11" is a Water Pump

A. Serviceable part. No defect. Return to service.
B. Excessive wear to bearing. Do not reuse.
C. Cracked housing. Do not reuse.
D. Defective seal / impeller. Do not reuse.

12. Item "12" is Bent Connecting Rod

A. Engine overspeed
B. Piston pin seizure.
C. Hydrostatic lock.
D. Manufacturing defect

OIL ANALYSIS QUESTIONS

- Circle the answer that best describes the type or cause or the failure.

13. Technician A says that in oil analysis excessive cylinder/valve train wear will show up as high iron levels. Technician B says that excessive piston/ring wear on older engines can show up as high aluminum/chromium levels. Who is correct?

A. Technician A only
B Technician B only
C. Both are correct
D. Neither is correct

---

14. The best method for obtaining an oil sample is?

A. Drain plug method
B. Oil gallery (pressure valve) method
C. Siphon (vacuum) method
D. None of the above

---

15. The four major solid contaminants found in used engine oil are soot, silicon (dirt), fuel, and coolant?

A. True
B. False

---

16. Technician "A" says that a high silicon reading can be caused by dirt entering the engine and contaminating the oil due to a faulty air intake system. Technician "B" says that a high silicon reading can be caused by using too much sealant during engine assembling. Who is correct?

A. Technician A only
B. Technician B only
C. Both are correct
D. Neither is correct

GENERAL KNOWLEDGE QUESTIONS

- Circle the answer that best answers the general knowledge questions.

17. If an engine has a sudden loss of oil and the operator does not shut off the engine and continues to operate it what will be the first major component to fail?

A. Piston / Liner
B. Flywheel
C. Crankshaft / bearings
D. Oil pump

18. If an engine has a sudden loss of coolant and the operator does not shut off the engine and continues to operate it what will be the first major component to fail?

A. Piston / Liner
B. Camshaft / Rollers
C. Water Pump
D. Unit Injector

19. A quart can of engine oil has a marking on the lid of SAE 10w30. Technician "A" says the SAE stands for *"Society Automotive Engineers"* and this oil is a 10 weight viscosity cold and 30 weight viscosity hot. Technician "B" says the SAE stands for *"Special Additive Enabled"* and the 10w30 stands for the types of additives used. Who is right?

A. Technician A only
B. Technician B only
C. Both Technicians A & B
D. Neither Technician A or B

20. Technician "A" says that orange colored diesel fuel should be used in US07 emission and newer on-highway engines. Technician "B" says that blue/green colored diesel fuel should be used in US07 emission and newer on-highway engines. Who is correct?

A. Technician A only
B. Technician B only
C. Both Technicians A & B
D. Neither Technician A or B

SKILLS USA 2015 – FAILURE ANALYSIS
STATION # 11 - ANSWERS

PARTS:

1. B
2. C
3. D
4. D
5. D
6. B
7. D
8. B
9. ~~B~~ D
10. A
11. D
12. C

OIL ANALYSIS:

13. A
14. B
15. B
16. C

GENERAL KNOWLEDGE:

17. C
18. A
19. D
20. B

SKILLS USA 2015 – FAILURE ANALYSIS
STATION # 11 - SCORING

No. Correct	Score
20	100
19	95
18	90
17	85
16	80
15	75
14	70
13	65
12	60
11	55
10	50
9	45
8	40
7	35
6	30
5	25
4	20
3	15
2	10
1	5
0	0

MERITOR

SkillsUSA

SkillsUSA Diesel Equipment Technology Competition 2015

Written Test-Braking Systems

Station 12

Contestant's Number _____

Written Brake Test Station Number _____

Written Test-All Correct Answers= 2.5 Points
Possible 50 Points
*******Use the supplied information at the Written Brake Station you are assigned to answer the below questions*****
Circle your Answer after the Question

1. A Spring Brake Chamber can be automatically actuated by a low air condition.

   A) This is a True statement.
   B) This is a False statement.
   C) This statement is False for the Service/Spring Brake Chamber Assembly.
   D) None of the above is correct.

2. Technician A says that the Recommended Work Practices for Servicing Brakes for any Fiber type Brake is to have Respiratory Protection.
   Technician B says that Never should a Technician use compressed air by itself, dry brushing, or a vacuum not equipped with a HEPA Filter when cleaning brake parts or assemblies.

   Who's Correct?

   A) Technician A Only
   B) Technician B Only
   C) Both Technicians A and B
   D) Neither Technicians A or B

3. The purpose of an Automatic Slack Adjuster (ASA) is:

   Circle below all that apply:

   A) Maintain a Preset Clearance between the Brake Shoe Lining and the Brake Drum Surface.
   B) Provide a means to manually release the Brake Shoes away from the Brake Drum for Service.
   C) Automatically Adjust the Brake Shoes closer to the Brake Drum Surface as the Brake Lining Wears.
   D) All The Above.
   E) None of the Above.

Cleaning Page

4. Technician A says that the Primary Brake Shoe in a Cam Brake assembly is the Brake Shoe that engages first when looking at the Wheel Rotation.
   Technician B says that the Primary Shoe could be located on the Top or Bottom. It depends on Cam Location at the Wheel assembly and the Wheel Rotation.

   Who's Correct?

   A) Technician A only
   B) Technician B only
   C) Both Techs A and B
   D) Neither Tech A or B

5. Technician A says that Cam Brake performance is affected by the heat expansion of the Brake Drum and can create Brake Fade.
   Technician B says that a Disc Brake is unaffected by heat as the Disc Rotor expansion as it gets hot does not create a Brake Fade condition.

   Who's Correct?

   A) Technician A only
   B) Technician B only
   C) Both Techs A and B
   D) Neither Tech A or B

6. A Brake Spider that is used on a Cam Brake can be _____ to the axle.

   A) Bolted
   B) Welded
   C) Either Bolted or Welded
   D) None of the Above

7. What is the A/L Factor for a Wheel-End Brake with a Type 30 Brake Chamber and a 6.00" ASA?

   A) 36
   B) 5.0
   C) 50
   D) 180

8. Air Brake Chambers are specified by _____ for a particular Brake and Axle load.
   A) Chamber size
   B) Weight
   C) Length
   D) Deceleration Ratios

9. During a PM inspection a Technician has to ensure the foundation brakes are applying properly. To check that he/she must_____.

   A) Measure applied brake stroke
   B) Measure free travel
   C) Make sure the park brake chamber has air pressure
   D) All of the above

SkillsUSA
2015 Contest Projects

Electrical Construction Wiring

Click the “Print this Section” button above to automatically print the specifications for this contest. Make sure your printer is turned on before pressing the button.

Electrical Construction Wiring

There are many different file types for this project. You can download them all here.

SkillsUSA
2015 Contest Projects

Electronics Technology

Click the “Print this Section” button above to automatically print the specifications for this contest. Make sure your printer is turned on before pressing the button.

BREADBOARDING PROJECT

Electronics Technology

SkillsUSA
Champions at Work®

Contestant Handout

2015

Nida Corporation
300 S. John Rodes Boulevard
Melbourne, Florida 32904

BREADBOARDING PROJECT

Overview

Total Time - 120 min | Total Points - 200 | Overall Weight - 20%

Instructions

You will be scored on your ability to:

1. Read and follow instructions.
2. Interpret a circuit design drawing.
3. Identify and correct design flaws.
4. Construct a bar graph voltmeter.
5. Construct a dual voltage power supply.

Judges are **NOT** permitted to answer questions during the competition. Should you encounter a technical problem, assistance may be requested by pressing the "H" key on the console. All technical problems will be corrected by the Judge and no demerits will be assessed.

Judges **WILL** assess a 2 point demerit for each violation of the following. Demerit points will be used as a discriminating factor in breaking ties.

1. Unwarranted requests for assistance (2 points)
2. Identifying good equipment as faulty (2 points)
3. Failure to follow instructions (2 points)
4. Safety violations (2 points)
   - ✓ Wearing jewelry
   - ✓ Not wearing safety glasses
   - ✓ Improper use of soldering iron

Materials Required

Breadboarding Project Contestant Handout
Reference Manual (Data Sheets)
Part 1 Breadboarding Pre-packaged Design Kit
PC130X (single) Design Board
VICA03-1 Power Supply Circuit Board
Oscilloscope
Multimeter
Nida Screwdriver
Nida Model 130E Test Console
Miscellaneous Tools as Required

Copyright © 2015 by Nida Corporation

Procedure

1. **Log-in.** Observe the display on the Nida Model 130E Test Console and ensure that it looks like the example shown in Figure 1. Verify that your contestant number replaces the **[--- xx ---]** shown in the example.

```
BREADBOARDING
--- xx ---

Part 1
Judge's Code : ___
```

Figure 1

2. You will be required to breadboard two circuits, the first consisting of a Bar Graph Voltmeter. You will be scored on your ability to follow instructions, interpret schematic drawings, and produce a breadboard circuitry layout that meets the criteria of neatness, design, and operation. If any circuit fails your checks and you determine that a component displays symptoms of a factory defect, press the "**H**" key on the console and a Judge will respond. The Judge will assess the situation and determine the appropriate action.

3. You will start with Part 1 and breadboard the Bar Graph Voltmeter circuit. When you are ready to begin, turn the page to "Worksheet 1" and carefully follow all instructions. Use the information provided in the Reference Manual (Data Sheets) as needed.

Begin when ready!

Copyright © 2015 by Nida Corporation

WORK SHEET #1

Part 1

1. **Verification.** Using the Parts List provided below, verify the Bar Graph Voltmeter parts kit (green dot) is complete and all components are visibly serviceable. If you identify any discrepancy, press the "**H**" key on the console and a Judge will respond.

PARTS LIST

DESIGN COMPONENTS		
PART NO.	DESCRIPTION	QUANTITY
05930024	IC, LM3914	1
51020004	LED, RED RECTANGULAR	10
1206412005	RES, 1.2k 1/4w	1
1206439005	RES, 3.9k 1/4w	1
1427420005	RES, 2k VAR	1
1427450005	RES, 5k VAR	1
41010008	Toggle SW	1
81150137	Wire	4 ft

2. **Design.** Using the PC130-X (single) Design Board, pre-packaged design kit, the Reference Manual (Data Sheets), and the circuit shown in Figure 3, construct the Bar Graph Voltmeter circuit.

3. **System Setup.** Perform the System Setup.

4. **Operational Check.** Perform the Operational Check to verify functionality.

Copyright © 2015 by Nida Corporation

SYSTEM SETUP

1. Bar Graph Voltmeter (PC130X)
   a. Install the PC130X circuit card containing your Bar Graph Voltmeter in the PC2 position of the Nida Model 130E Test Console.
   b. Set resistors R1 and R2 on the Bar Graph Voltmeter to the mid (halfway) position.
   c. Set toggle switch S1 on the Bar Graph Voltmeter to the 5 Volt position.

2. Power Supply Circuit (VICA03-1)
   a. Install the VICA03-1 Power Supply circuit card in the PC1 position of the Nida Model 130E Test Console.
   b. Set S1 on the VICA03-1 Power Supply circuit card to the Off (down) position.
   c. Set R4 and R7 on the VICA03-1 Power Supply circuit card to the mid (halfway) position.

3. Nida Model 130E Test Console
   a. Set the test console Positive Power Supply to +5 VDC.
   b. Press the DC Power switch on the PC2 position of the test console and verify that the LED illuminates.
   c. Press the AC Power switch on the PC1 position of the test console and verify that the LED illuminates.

Copyright © 2015 by Nida Corporation

OPERATIONAL CHECK

1. Power Supply Circuit (VICA03-1)

   a. Using a multimeter, adjust R4 on the VICA03-1 Power Supply circuit card for +12 VDC at TP2.

   b. Using a multimeter, adjust R7 on the VICA03-1 Power Supply circuit card for +5 VDC at TP3.

   c. Move S1 on the VICA03-1 Power Supply circuit card to the On (up) position.

2. Bar Graph Voltmeter (PC130X)

   a. Adjust R2 on the Bar Graph Voltmeter so that LED's 1 through 5 are illuminated.

   b. Move S1 on the on the Bar Graph Voltmeter to the 12 Volt position.

   c. Adjust R1 on the Bar Graph Voltmeter so that LED's 1 through 5 are illuminated. DO NOT change the calibration of R1 and R2 after the initial adjustments.

   d. End of Operational Check.

Press the "**H**" key and then the "**ENTER**" key on the console
to request your first verification check.
*****

Copyright © 2015 by Nida Corporation

130X BREADBOARD DIAGRAM

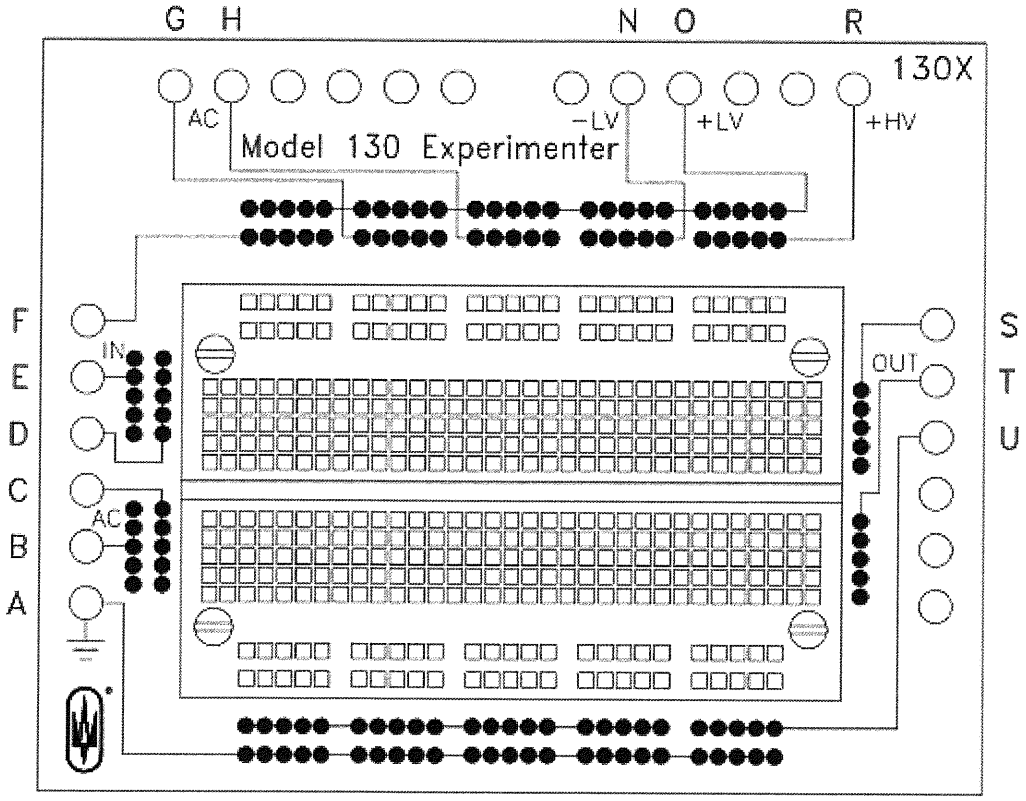

PIN	TYPE
A	GROUND
B	AC
C	AC
D	INPUT
E	INPUT
F	INPUT
G	AC
H	AC
N	-DC
O	+DC
S	OUTPUT
T	OUTPUT
U	OUTPUT

Figure 2

Copyright © 2015 by Nida Corporation

BAR GRAPH VOLTMETER

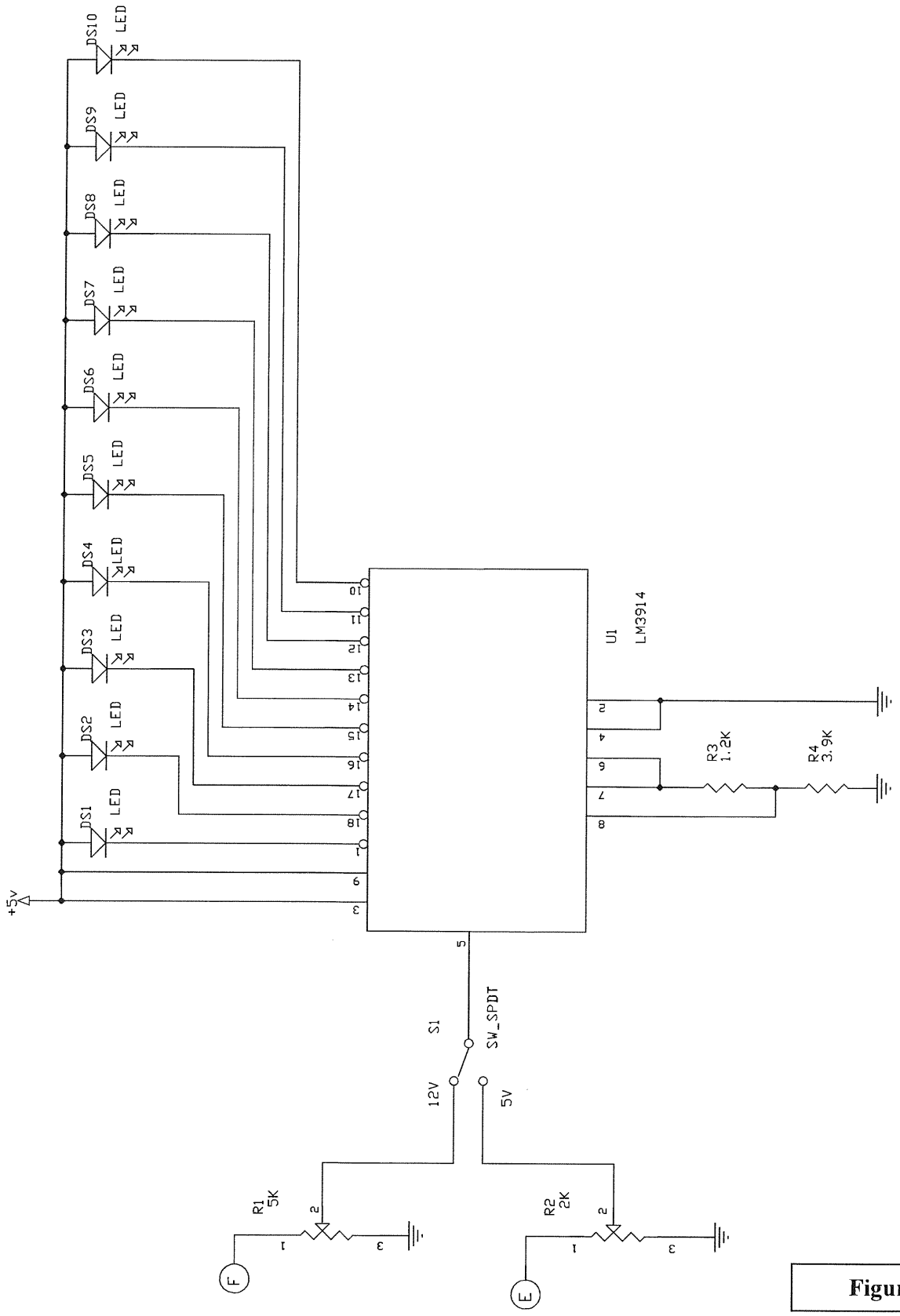

Figure 3

Copyright © 2015 by Nida Corporation

BREADBOARDING PROJECT

Electronics Technology

SkillsUSA
Champions at Work®

WORKSHEET #2

WORK SHEET #2

Part 2

1. **Verification.** Using the Parts List provided below, verify the Dual Voltage Power Supply parts kit (red dot) is complete and all components are visibly serviceable. If you identify any discrepancy, press the "**H**" key on the console and a Judge will respond.

PARTS LIST

DESIGN COMPONENTS		
PART NO.	DESCRIPTION	QUANTITY
21084400	CAP, 1000uf 50V	1
21041250	CAP, 0.1uf 25V (104)	4
21053350	CAP, 1uf 35V (105)	2
00520013	DIODE, 1N4003	2
05930029	IC, LM350T	2
1603210001	RES, 10 3w	1
1206312005	RES, 120 1/4w	2
1206322005	RES, 220 1/4w	1
1206333005	RES, 330 1/4w	1
1427410009	RES, 1k VAR	2
4101008	Toggle SW	2
81150137	Wire	3 ft

2. **Design.** Using the PC130-XX (double) Design Board, pre-packaged design kit, the circuit shown in Figure 3, and the Reference Manual (Data Sheets), construct the Dual Voltage Power Supply. NOTE: The dual voltage power supply has two DC voltage outputs and is an exact duplicate of the VICA 03-1 power supply circuit card. IC1 and IC2 are almost-identical DC voltage regulator circuits powered by the full-wave rectifier and filter circuit made of D1, D2, R1, and C1. During construction, configure R4 and R7 to produce the lowest output voltage with R4/R7 at the fully counterclockwise (CCW) position, and the most output voltage when R4/R7 is fully clockwise (CW).

3. **System Setup.** Perform the System Setup.

4. **Operational Check.** Perform the Operational Check to verify functionality.

Copyright © 2015 by Nida Corporation

SYSTEM SETUP

1. Duel Voltage Power Supply (PC130XX)
   a. Install the PC130XX circuit card containing your Duel Voltage Power Supply in the PC1 position of the Nida Model 130E Test Console.
   b. Set resistors R4 and R7 on the Dual Voltage Power Supply to the minimum position.
   c. Set toggle switches S1 and S2 on the Dual Voltage Power Supply to the OFF position.

2. Bar Graph Voltmeter Circuit (PC130X)
   a. Install the PC130X circuit card containing your Bar Graph Voltmeter in the PC2 position of the Nida Model 130E Test Console.
   b. Set resistors R1 and R2 on the Bar Graph Voltmeter to the mid (halfway) position.
   c. Set toggle switch S1 on the Bar Graph Voltmeter to the 5 Volt position.

3. Nida Model 130E Test Console
   a. Set the test console Positive Power Supply to +5 VDC.
   b. Press the DC Power switch on the PC2 position of the test console and verify that the LED illuminates.
   c. Press the AC Power switch on the PC1 position of the test console and verify that the LED illuminates.

Copyright © 2015 by Nida Corporation

OPERATIONAL CHECK

1. Dual Voltage Power Supply Circuit (PC130XX)
   a. Move S1 and S2 on the PC130XX Power Supply circuit card to the On position.
   b. Using a multimeter, adjust R4 on the PC130XX Power Supply circuit card for +12 VDC at pin "S".
   c. Using a multimeter, adjust R7 on the PC130XX Power Supply circuit card for +5 VDC at pin "T".

2. Bar Graph Voltmeter (PC130X)
   a. Adjust R2 on the Bar Graph Voltmeter so that LEDs 1 through 5 are illuminated.
   b. Move S1 on the on the Bar Graph Voltmeter to the 12 Volt position.
   c. Adjust R1 on the Bar Graph Voltmeter so that LEDs 1 through 5 are illuminated. DO NOT change the calibration of R1 and R2 after the initial adjustments.
   d. End of Operational Check.

Press the "**H**" key and then the "**ENTER**" key on the console to request your first verification check.

*****

Copyright © 2015 by Nida Corporation

130XX BREADBOARD DIAGRAM

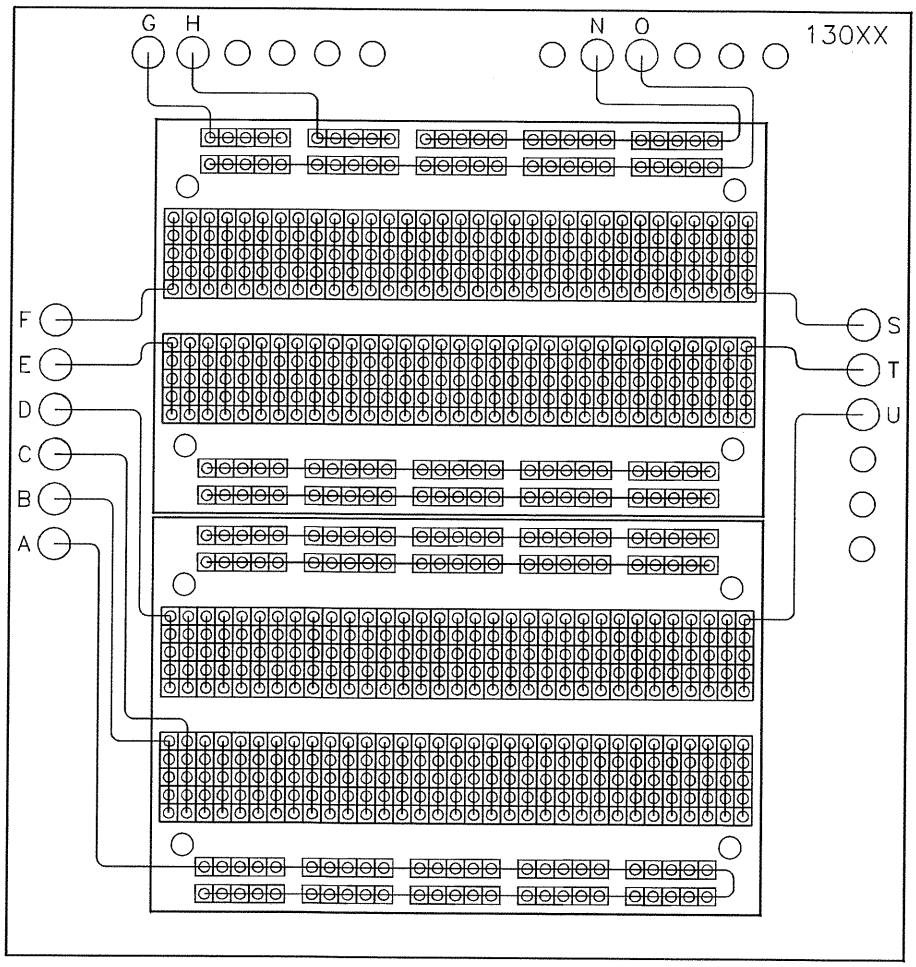

PIN
A = GROUND
B = AC
C = AC
D = INPUT
E = INPUT
F = INPUT
G = AC
H = AC
N = NEGATIVE DC
O = POSITIVE DC
S = OUTPUT
T = OUTPUT
U = OUTPUT

Figure 2

Copyright © 2015 by Nida Corporation

DUAL VOLTAGE POWER SUPPLY

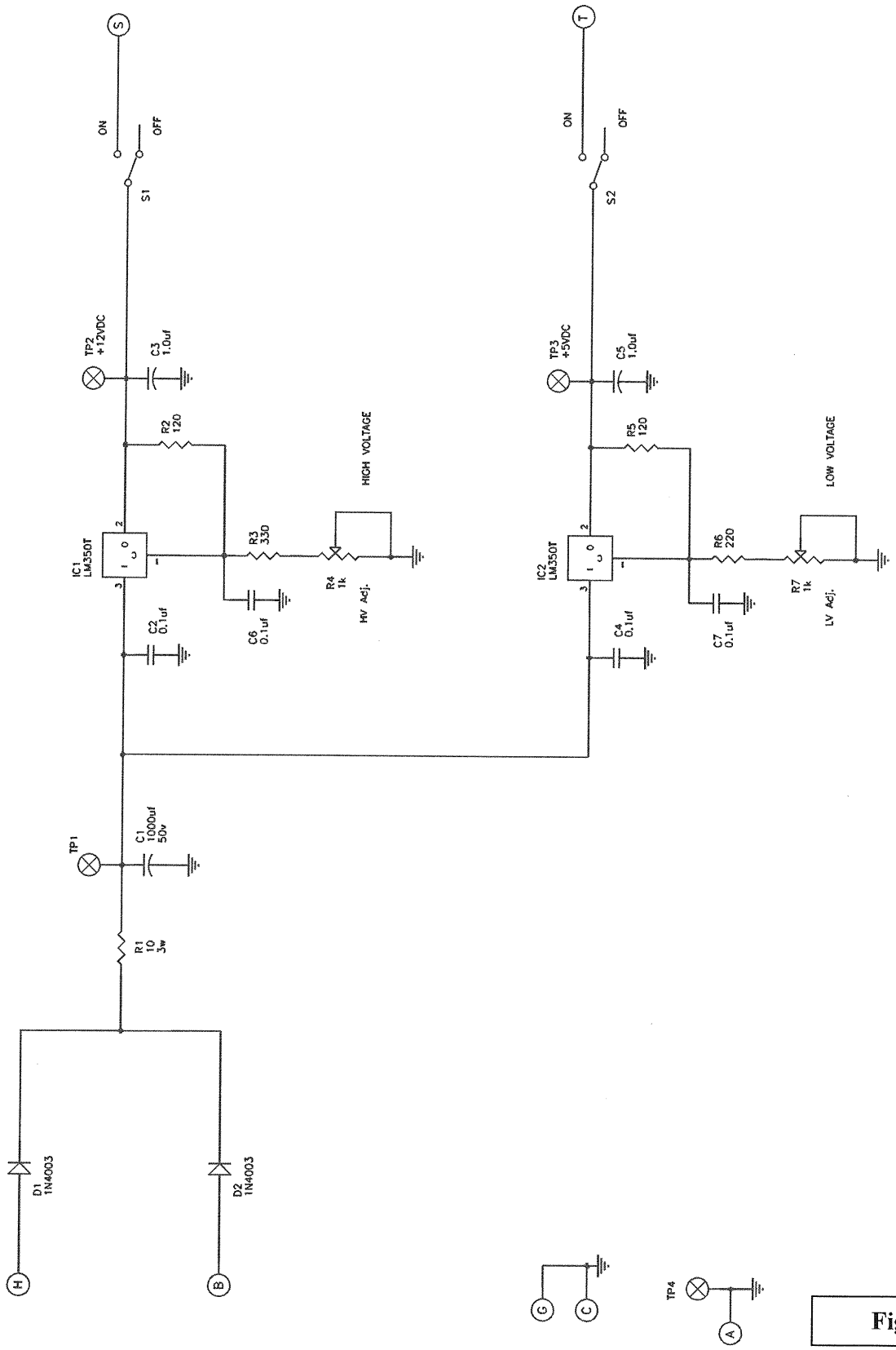

Figure 3

Copyright © 2015 by Nida Corporation

BREADBOARDING PROJECT

Electronics Technology

SkillsUSA
Champions at Work®

Judge's Scoring Guide

2015

Nida Corporation
300 S. John Rodes Boulevard
Melbourne, Florida 32904

BREADBOARDING PROJECT

Overview

Total Time - 120 min Overall Weight - 20%

The Breadboarding Project has four parts. The Contestant will construct two circuits: a bar graph voltmeter and a dual voltage power supply. The Judges will score the contestants on their ability to read and follow instructions, interpret circuit designs, identify and correct design flaws, and construct the two circuits.

General Guidelines

a. Judges may **NOT** provide technical assistance or give advice during an event.

b. Judges will ensure all materials have been issued prior to the start of an event.

c. Judges may assist with technical problems that interfere with an event.

d. Judges must respond immediately to a **HELP** request.

e. Demerit Codes

- Unwarranted requests for assistance..... J33
- Identifying good equipment as faulty J43
- Failure to follow instructions..... J53
- Safety violations J63
  - ✓ Wearing jewelry
  - ✓ Not wearing safety glasses
  - ✓ Improper use of soldering iron

Copyright © 2015 by Nida Corporation

Event Scoring

There are 2 parts to the breadboarding project. Part 1 is contained in the Contestant Handout and requires the contestant to build a Bar Graph Voltmeter using a PC130-X (single) breadboard circuit card. Power for the Bar Graph Voltmeter is provided by the pre-built, VICA03-1 Power Supply board. Part 2 is contained in Worksheet 2. The Contestant is required to breadboard an equivalent power supply, equal to the pre-built VICA03-1 Power Supply used in Part 1. Final judging for Part 2 will be accomplished using the breadboarded Power Supply from Part 2 and the Bar Graph Voltmeter from Part 1.

There will be 2 separate breadboarding component kits provided. Each component kit should be verified with the parts list provided prior to starting the project. There should be no missing or extra parts in the breadboarding kits.

Enter " BB1 " for Part 1 and " BB2 " for Part 2 on contestant trainer before performing the Judging event.

Copyright © 2015 by Nida Corporation

PART 1

1. Free Points 5 ..... **BB1**

2. First Verification: Enter Judge's Code - **JDG**

   a. Setup – Add all that apply ..... **0, 5, 10, or 15**
      1. VICA03-1 is positioned at PC1; PC130X is positioned at PC2 ..... 5 points
      2. AC power is applied to the PC1 location ..... 5 points
      3. +5VDC is applied to the PC2 location ..... 5 points

   b. Neatness – Add all that apply ..... **0, 5, or 10**
      1. PC2 wires are straight, left & right or up & down ..... 5 points
      2. Components are flush with the breadboard ..... 5 points

   c. Design – Add all that apply ..... **0, 4, 8, 12, 16, or 20**
      1. Economy of wire usage ..... 4 points
      2. Layout is symmetrical ..... 8 points
      3. Display devices are balanced and easy to view ..... 8 points

   d. Operation – Add all that apply ..... **0, 10, 20, 30, or 40**
      1. When +5 volts is displayed as 5 LEDs ..... 10 points
      2. When +12 volts is displayed as 5 LEDs ..... 10 points
      3. If turning up the +5 volt adjustment lights all LEDs ..... 10 points
      4. If LEDs move left-to-right as voltage increases ..... 10 points

➡ **** COLLECT WORKSHEET #1 ****

and

➡ **** HAND OUT WORKSHEET #2,**
the PC130XX circuit board,
and the Worksheet 2 parts kit **

Copyright © 2015 by Nida Corporation

PART 2

3. Free Points 5 ..... **BB2.**

4. Second Verification: Enter Judge's Code - **JDG**

   a. Setup – Add all that apply. ..... **0, 5, or 10**
      1. PC130XX is positioned at location PC1 ..... 5 points
      2. AC power is applied to the PC1 location, and +5VDC is applied to the PC2 location ..... 5 points

   b. Neatness – Add all that apply. ..... **0, 4, 8, 12, 16, or 20**
      1. Wires are straight, left & right or up & down ..... 4 points
      2. Component leads are trimmed evenly ..... 8 points
      3. Components are flush with the breadboard ..... 8 points

   c. Design – Add all that apply. ..... **0, 4, 8, 12, 16, or 20**
      1. Economy of wire usage ..... 4 points
      2. Layout is symmetrical ..... 8 points
      3. Display devices are balanced and easy to view ..... 8 points

   d. Operation – Choose one only. ..... **0,15,20,35,40, or 55**
      1. Varying R4 increases and decreases LEDs ..... 20 points
      2. Varying R7 increases and decreases LEDs ..... 20 points
      3. The power supply circuits and the bar graph circuits operate together as intended ..... 15 points

**** END OF EVENT ****

Copyright © 2015 by Nida Corporation

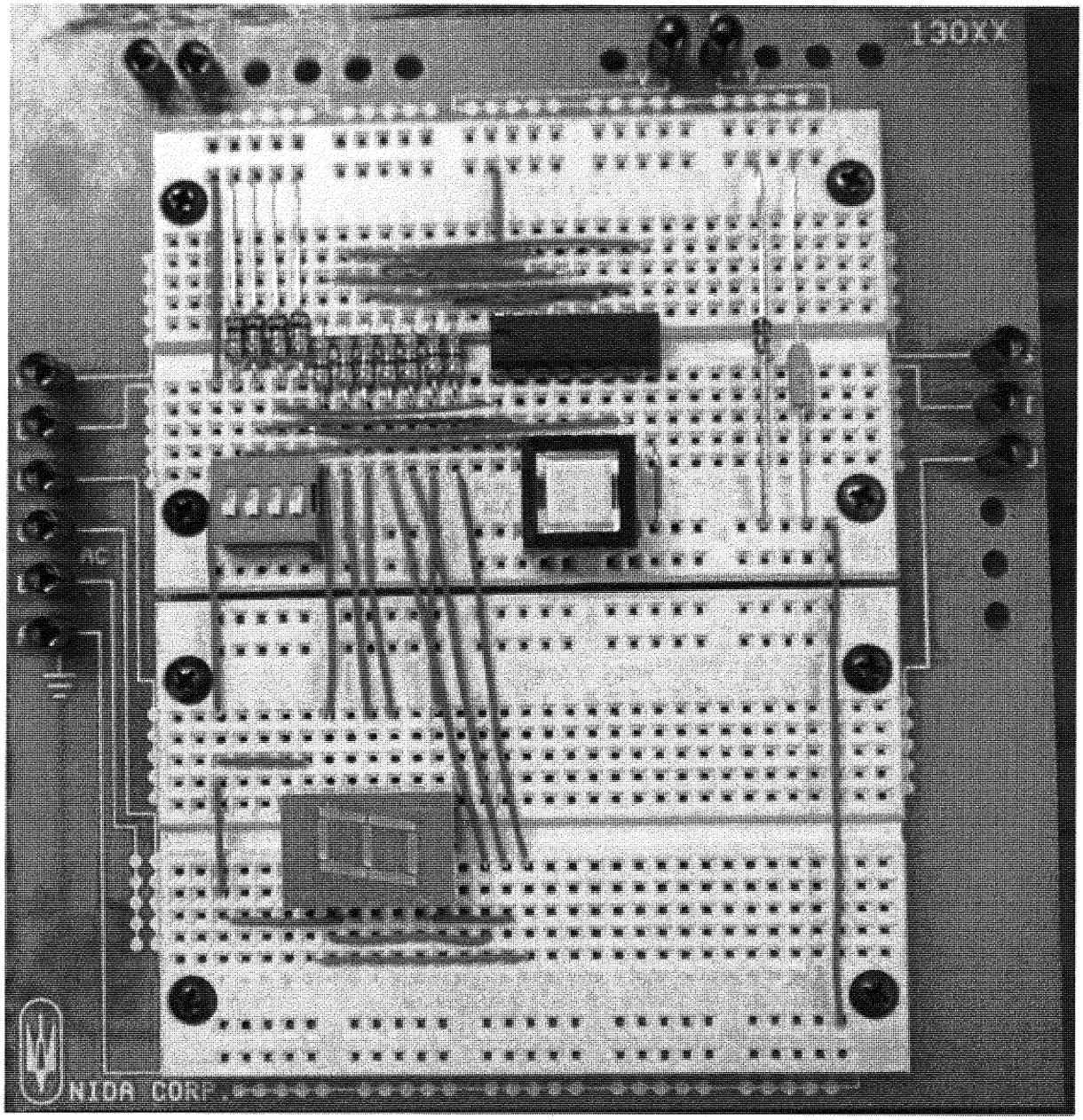

Figure 1 – Neat Layout

Copyright © 2015 by Nida Corporation

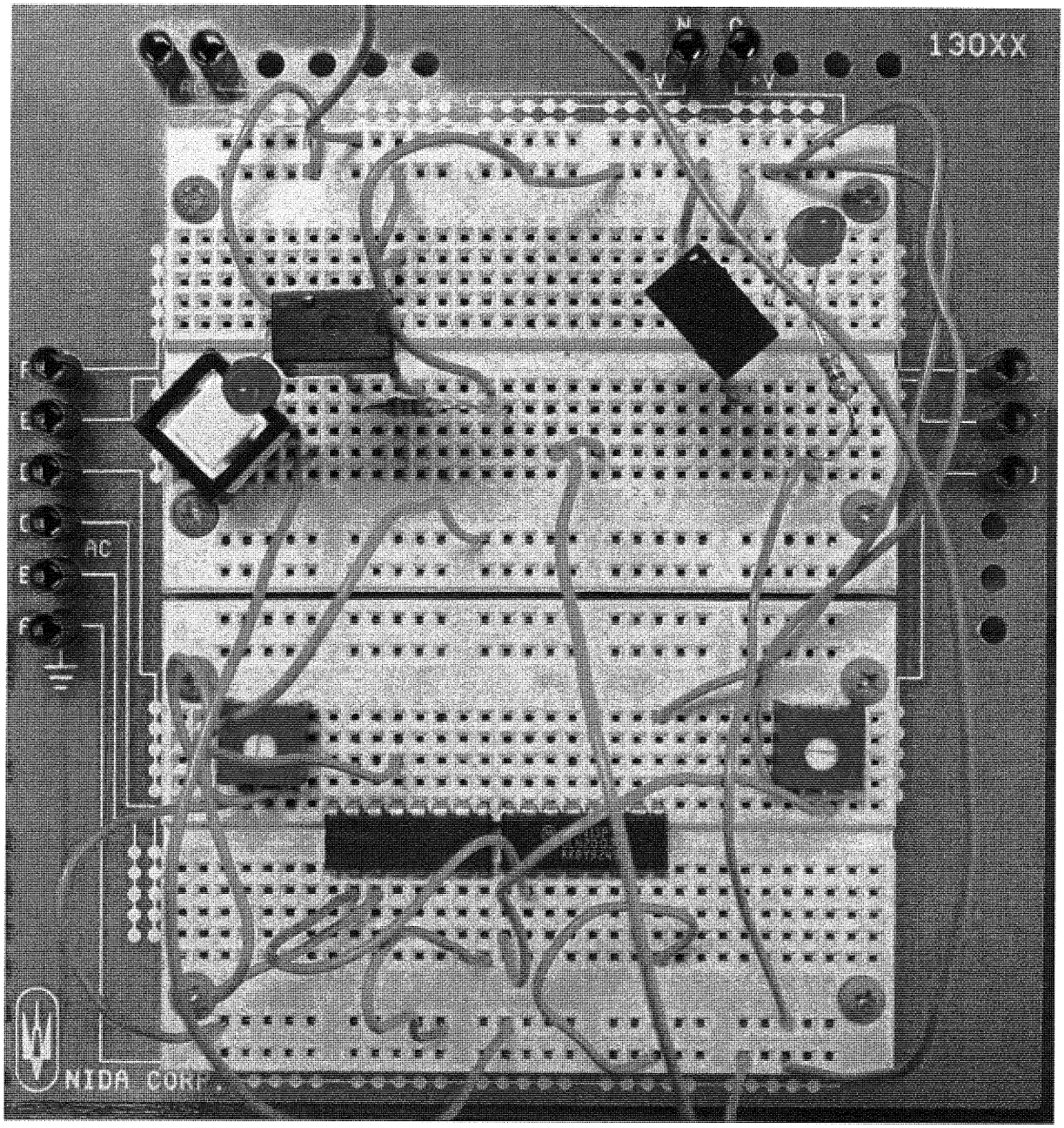

Figure 2 – Sloppy Layout

Copyright © 2015 by Nida Corporation

CUSTOMER SERVICE EXAMINATION

Electronics Technology

SkillsUSA
Champions at Work®

Contestant Handout

2015

Nida Corporation
300 S. John Rodes Boulevard
Melbourne, Florida 32904

CUSTOMER SERVICE EXAMINATION

Overview

Total Time – 30 min Total Points – 150 pts Overall Weight – 15%

Instructions

1. Read and follow all instructions.
2. Answer all questions.

Judges are **NOT** permitted to answer questions during the competition. Should you encounter a technical problem, you may request assistance by pressing the **"H"** key and then the **"ENTER"** key on the test console. All technical problems will be corrected by the Judge and no demerits will be assessed.

Judges **WILL** assess a 2-point demerit for each violation of the following. Demerit points will be used as a discriminating factor in breaking ties.

1. Unwarranted requests for assistance (2 points)
2. Identifying good equipment as faulty (2 points)
3. Failure to follow instructions (2 points)
4. Safety violations (2 points)

Materials Required

Customer Service Examination - Contestant Handout
Paper Test Question Booklet
Answer Sheet (last page of this manual)
Nida Model 130E Test Console
Pencil

Quick Reference Listing

[S] Enter "S" to skip question

[R] Enter "R" & question number to go to a specific question (example – R26).

[Y] Enter "Y" to answer a yes question.

[N] Enter "N" to answer a no question.

[EXIT] Enter "EXIT" to end the test.

[A, B, C, D] Enter these letters to identify correct answer.

Copyright - 2015 by Nida Corporation

Procedure

1. Observe the display on the Nida Model 130E Test Console and ensure that it looks like the example shown in Figure 1. Verify that your contestant number replaces the **[-- xx --]** shown in the example.

```
[ -- xx -- ]

CUSTOMER SERVICE

Question 1 [  ]: ___
```

Figure 1

2. Read the question carefully and select the best answer from the choices. A correct answer is awarded 2 points. Questions skipped (never answered) are awarded zero points.

3. If you wish to answer the question, enter the **"A, B, C, or D"** key on the Nida Model 130E Test Console keypad and press ENTER. Your response will be recorded, and the display will sequence to the next question number.

4. If you choose to skip a question, enter the letter **"S"** on the Nida Model 130E Test Console keypad and press ENTER. No response is recorded (never answered), and the display will sequence to the next question number.

5. When all 50 questions have been displayed in sequence, you will be asked if you are finished. Enter **"Y"** to end the test. Enter **"N"** to begin the review mode. You will jump to the beginning of the test. If you wish to go to a specific question number, enter **"R"** followed by the question number. For example, R26 will take you to question number 26.

6. Entering the word "EXIT" at any time during the test will end the test.

7. Questions **MUST** be answered using the Nida Model 130E Test Console keypad in order to receive credit. However, the scratchpad answer sheet has been provided as a reference. The scratchpad answer sheet will be destroyed at the conclusion of the test and will have no bearing on final test results. Begin when ready.

Copyright - 2015 by Nida Corporation

CONTESTANT SCRATCHPAD ANSWER SHEET

Total Points - 150

CONTESTANT #: _____

1. A B C D	26. A B C D	51. A B C D	76. A B C D
2. A B C D	27. A B C D	52. A B C D	77. A B C D
3. A B C D	28. A B C D	53. A B C D	78. A B C D
4. A B C D	29. A B C D	54. A B C D	79. A B C D
5. A B C D	30. A B C D	55. A B C D	80. A B C D
6. A B C D	31. A B C D	56. A B C D	81. A B C D
7. A B C D	32. A B C D	57. A B C D	82. A B C D
8. A B C D	33. A B C D	58. A B C D	83. A B C D
9. A B C D	34. A B C D	59. A B C D	84. A B C D
10. A B C D	35. A B C D	60. A B C D	85. A B C D
11. A B C D	36. A B C D	61. A B C D	86. A B C D
12. A B C D	37. A B C D	62. A B C D	87. A B C D
13. A B C D	38. A B C D	63. A B C D	88. A B C D
14. A B C D	39. A B C D	64. A B C D	89. A B C D
15. A B C D	40. A B C D	65. A B C D	90. A B C D
16. A B C D	41. A B C D	66. A B C D	91. A B C D
17. A B C D	42. A B C D	67. A B C D	92. A B C D
18. A B C D	43. A B C D	68. A B C D	93. A B C D
19. A B C D	44. A B C D	69. A B C D	94. A B C D
20. A B C D	45. A B C D	70. A B C D	95. A B C D
21. A B C D	46. A B C D	71. A B C D	96. A B C D
22. A B C D	47. A B C D	72. A B C D	97. A B C D
23. A B C D	48. A B C D	73. A B C D	98. A B C D
24. A B C D	49. A B C D	74. A B C D	99. A B C D
25. A B C D	50. A B C D	75. A B C D	100. A B C D

Copyright - 2015 by Nida Corporation

REFERENCE MANUAL

Electronics Technology

SkillsUSA

Champions at Work®

Data Sheets

2015

REFERENCE MANUAL

DATA SHEETS

Table Of Contents

Page

1N4003 Rectifier....1
1N4148 Switching Diode....3
1N914 Switching Diode....5
1N4733A Zener Diode....7
1N4740A Zener Diode....7
1N960B Zener Diode....9
4017 Hex D-Type Flip-Flop IC....11
4049/14049 Hex Inverter/Buffer IC....15
4060 Binary Counter IC....17
LM393 Voltage Comparator IC....21
LM3914 Dot/Bar Display Driver IC....23
LED - Rectangular....27
LED - Mini Round....29
LM741 Op Amp....31
BF459 Transistor....33
2N2222 Transistor....35
2N3053 Transistor....37
2N4249 Transistor....39
2N5640 Field Effect Transistor....41
78L12 Regulator....43
LM350T Regulator....47
TT11DG Toggle....49

Copyright © 2015 by Nida Corporation

FAIRCHILD
SEMICONDUCTOR™

1N4001 - 1N4007

Features

- Low forward voltage drop.
- High surge current capability.

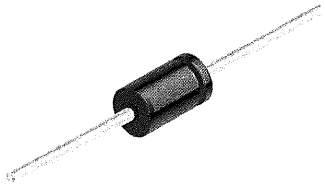

DO-41
COLOR BAND DENOTES CATHODE

1.0 Ampere General Purpose Rectifiers

Absolute Maximum Ratings*

T_A = 25°C unless otherwise noted

Symbol	Parameter	Value	Units
$I_{F(AV)}$	Average Rectified Current .375 " lead length @ T_A = 75°C	1.0	A
I_{FSM}	Non-repetitive Peak Forward Surge Current 8.3 ms single half-sine-wave Superimposed on rated load (JEDEC method)	30	A
P_D	Total Device Dissipation Derate above 25°C	2.5 20	W mW/°C
$R_{\theta JA}$	Thermal Resistance, Junction to Ambient	50	°C/W
T_{stg}	Storage Temperature Range	-55 to +175	°C
T_J	Operating Junction Temperature	-55 to +150	°C

*These ratings are limiting values above which the serviceability of any semiconductor device may be impaired.

Electrical Characteristics

T_A = 25°C unless otherwise noted

Symbol	Parameter	Device							Units
		4001	4002	4003	400	400	4006	4007	
V_{RRM}	Peak Repetitive Reverse Voltage	50	100	200	400	600	800	1000	V
V_{RMS}	Maximum RMS Voltage	35	70	140	280	420	560	700	V
V_R	DC Reverse Voltage (Rated V_R)	50	100	200	400	600	800	1000	V
I_{RM}	Maximum Instantaneous Reverse Current @ rated V_R T_A = 25°C T_A = 100°C	5.0 500							µA µA
V_{FM}	Maximum Instantaneous Forward Voltage @ 1.0 A	1.1							V
I_{rr}	Maximum Full Load Reverse Current, Full Cycle T_A = 75°C	30							µA
C	Typical Junction Capacitance V_R = 4.0 V, f = 1.0 MHz	15							pF

©2001 Fairchild Semiconductor Corporation

High-speed diodes

1N4148; 1N4448

FEATURES

- Hermetically sealed leaded glass SOD27 (DO-35) package
- High switching speed: max. 4 ns
- General application
- Continuous reverse voltage: max. 100 V
- Repetitive peak reverse voltage: max. 100 V
- Repetitive peak forward current: max. 450 mA.

APPLICATIONS

- High-speed switching.

The diodes are type branded.

Fig.1 Simplified outline (SOD27; DO-35) and symbol.

DESCRIPTION

The 1N4148 and 1N4448 are high-speed switching diodes fabricated in planar technology, and encapsulated in hermetically sealed leaded glass SOD27 (DO-35) packages.

MARKING

TYPE NUMBER	MARKING CODE
1N4148	1N4148PH or 4148PH
1N4448	1N4448

ORDERING INFORMATION

TYPE NUMBER	PACKAGE		
	NAME	DESCRIPTION	VERSION
1N4148	–	hermetically sealed glass package; axial leaded; 2 leads	SOD27
1N4448			

1N914

SMALL SIGNAL DIODE

DO-35

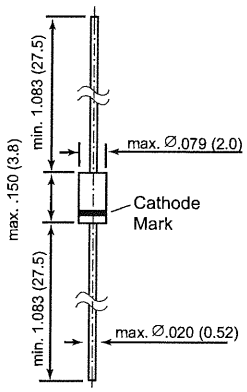

Dimensions in inches and (millimeters)

FEATURES

- Silicon Epitaxial Planar Diode
- For general purpose and switching.

MECHANICAL DATA

Case: DO-35 Glass Case
Weight: approx. 0.13 g

MAXIMUM RATINGS AND ELECTRICAL CHARACTERISTICS

Ratings at 25°C ambient temperature unless otherwise specified.

	SYMBOL	*VALUE*	*UNIT*
Peak Reverse Voltage	V_{RM}	100	V
Maximum Average Rectified Current	I_o	75	mA
Maximum Power Dissipation at T_{amb} = 25 °C	P_{tot}	500	mW
Maximum Junction Temperature	T_j	200	°C
Maximum Forward Voltage Drop at I_F = 10 mA	V_F	1.0	V
Maximum Reverse Current at V_R = 20 V V_R = 75 V	I_R	25 5.0	nA µA
Max. Reverse Recovery Time at $I_F = I_R$ = 10 mA, V_R = 6 V, R_L = 100 Ω, to I_{rr} = 1 mA	t_{rr}	4.0	ns
Maximum Capacitance at V_R=0, f=1.0 MHz	C_{tot}	4.0	pF

FAIRCHILD SEMICONDUCTOR®

January 2005

1N4728A - 1N4764A

Zeners

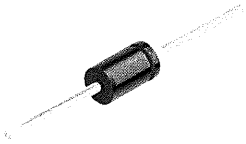

DO-41 Glass case
COLOR BAND DENOTES CATHODE

Absolute Maximum Ratings * T_a = 25°C unless otherwise noted

Symbol	Parameter	Value	Units
P_D	Power Dissipation @ TL ≤ 50°C, Lead Length = 3/8"	1.0	W
	Derate above 50°C	6.67	mW/°C
T_J, T_{STG}	Operating and Storage Temperature Range	-65 to +200	°C

* These ratings are limiting values above which the serviceability of the diode may be impaired.

Electrical Characteristics T_a = 25°C unless otherwise noted

Device	V_Z (V) @ I_Z (Note 1)			Test Current I_Z (mA)	Max. Zener Impedance			Leakage Current	
	Min.	Typ.	Max.		Z_Z @ I_Z (Ω)	Z_{ZK} @ I_{ZK} (Ω)	I_{ZK} (mA)	I_R (μA)	V_R (V)
1N4728A	3.315	3.3	3.465	76	10	400	1	100	1
1N4729A	3.42	3.6	3.78	69	10	400	1	100	1
1N4730A	3.705	3.9	4.095	64	9	400	1	50	1
1N4731A	4.085	4.3	4.515	58	9	400	1	10	1
1N4732A	4.465	4.7	4.935	53	8	500	1	10	1
1N4733A	4.845	5.1	5.355	49	7	550	1	10	1
1N4734A	5.32	5.6	5.88	45	5	600	1	10	2
1N4735A	5.89	6.2	6.51	41	2	700	1	10	3
1N4736A	6.46	6.8	7.14	37	3.5	700	1	10	4
1N4737A	7.125	7.5	7.875	34	4	700	0.5	10	5
1N4738A	7.79	8.2	8.61	31	4.5	700	0.5	10	6
1N4739A	8.645	9.1	9.555	28	5	700	0.5	10	7
1N4740A	9.5	10	10.5	25	7	700	0.25	10	7.6
1N4741A	10.45	11	11.55	23	8	700	0.25	5	8.4
1N4742A	11.4	12	12.6	21	9	700	0.25	5	9.1
1N4743A	12.35	13	13.65	19	10	700	0.25	5	9.9
1N4744A	14.25	15	15.75	17	14	700	0.25	5	11.4
1N4745A	15.2	16	16.8	15.5	16	700	0.25	5	12.2
1N4746A	17.1	18	18.9	14	20	750	0.25	5	13.7
1N4747A	19	20	21	12.5	22	750	0.25	5	15.2

©2005 Fairchild Semiconductor Corporation

FAIRCHILD
SEMICONDUCTOR®

Zeners
1N957B - 1N991B

Absolute Maximum Ratings * T_A = 25°C unless otherwise noted

Symbol	Parameter	Value	Units
P_D	Power Dissipation @ TL ≤ 75°C, Lead Length = 3/8"	500	mW
	Derate above 75°C	4.0	mW/°C
T_J, T_{STG}	Operating and Storage Temperature Range	-65 to +200	°C

* These ratings are limiting values above which the serviceability of the diode may be impaired.

Tolerance = 5%

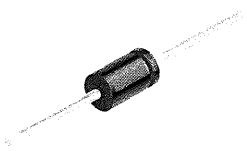

DO-35 Glass case
COLOR BAND DENOTES CATHODE

Electrical Characteristics T_A=25°C unless otherwise noted

Device	V_Z (Volts) (Note 1)				Z_Z (Ω) (Note 2)			I_R @ V_R		I_{ZM} (mA) (Note 3)
	Min.	Typ.	Max.	@ I_Z (mA)	Z_Z @ I_Z	Z_{ZK} @ I_{ZK} Ω	Z_{ZK} @ I_{ZK} mA	μA	Volts	
1N957B	6.46	6.8	7.14	18.5	4.5	700	1.0	150	5.2	47
1N958B	7.125	7.5	7.875	16.5	5.5	700	0.5	75	5.7	42
1N959B	7.79	8.2	8.61	15	6.5	700	0.5	50	6.2	38
1N960B	8.645	9.1	9.555	14	7.5	700	0.5	25	6.9	35
1N961B	9.5	10	10.5	12.5	8.5	700	0.25	10	7.6	32
1N962B	10.45	11	11.55	11.5	9.5	700	0.25	5	8.4	28
1N963B	11.4	12	12.6	10.5	11.5	700	0.25	5	9.1	26
1N964B	12.35	13	13.65	9.5	13	700	0.25	5	9.9	24
1N965B	14.25	15	15.75	8.5	16	700	0.25	5	11.4	21
1N966B	15.2	16	16.8	7.8	17	700	0.25	5	12.2	19
1N967B	17.1	18	18.9	7.0	21	750	0.25	5	13.7	17
1N968B	19	20	21	6.2	25	750	0.25	5	15.2	15
1N969B	20.9	22	23.1	5.6	29	750	0.25	5	16.7	14
1N970B	22.8	24	25.2	5.2	33	750	0.25	5	18.2	13
1N971B	25.652	27	28.35	4.6	41	750	0.25	5	20.6	11
1N972B	8.5	30	31.5	4.2	49	1000	0.25	5	22.8	10
1N973B	31.35	33	34.65	3.8	58	1000	0.25	5	25.1	9.2
1N974B	34.2	36	37.8	3.4	70	1000	0.25	5	27.4	8.5
1N975B	37.05	39	40.95	3.2	80	1000	0.25	5	29.7	7.8
1N976B	40.85	43	45.15	3.0	93	1500	0.25	5	32.7	7.0
1N977B	44.65	47	49.35	2.7	105	1500	0.25	5	35.8	6.4
1N978B	48.45	51	53.55	2.5	125	1500	0.25	5	38.8	5.9
1N979B	53.2	56	58.8	2.2	150	2000	0.25	5	42.6	5.4
1N980B	58.9	62	65.1	2.0	185	2000	0.25	5	47.1	4.9
1N981B	64.6	68	71.4	1.8	230	2000	0.25	5	51.7	4.5

©2004 Fairchild Semiconductor Corporation

FAIRCHILD SEMICONDUCTOR™

October 1987
Revised January 2004

CD4017BC • CD4022BC
Decade Counter/Divider with 10 Decoded Outputs • Divide-by-8 Counter/Divider with 8 Decoded Outputs

General Description

The CD4017BC is a 5-stage divide-by-10 Johnson counter with 10 decoded outputs and a carry out bit.

The CD4022BC is a 4-stage divide-by-8 Johnson counter with 8 decoded outputs and a carry-out bit.

These counters are cleared to their zero count by a logical "1" on their reset line. These counters are advanced on the positive edge of the clock signal when the clock enable signal is in the logical "0" state.

The configuration of the CD4017BC and CD4022BC permits medium speed operation and assures a hazard free counting sequence. The 10/8 decoded outputs are normally in the logical "0" state and go to the logical "1" state only at their respective time slot. Each decoded output remains high for 1 full clock cycle. The carry-out signal completes a full cycle for every 10/8 clock input cycles and is used as a ripple carry signal to any succeeding stages.

Features

- Wide supply voltage range: 3.0V to 15V
- High noise immunity: 0.45 V_{DD} (typ.)
- Low power TTL compatibility: Fan out of 2 driving 74L or 1 driving 74LS
- Medium speed operation: 5.0 MHz (typ.) with 10V V_{DD}
- Low power: 10 μW (typ.)
- Fully static operation

Applications

- Automotive
- Instrumentation
- Medical electronics
- Alarm systems
- Industrial electronics
- Remote metering

Ordering Code:

Order Number	Package Number	Package Description
CD4017BCM	M16A	16-Lead Small Outline Integrated Circuit (SOIC), JEDEC MS-012, 0.150" Narrow
CD4017BCN	N16E	16-Lead Plastic Dual-In-Line Package (PDIP), JEDEC MS-001, 0.300" Wide
CD4022BCM	M16A	16-Lead Small Outline Integrated Circuit (SOIC), JEDEC MS-012, 0.150" Narrow
CD4022BCN	N16E	16-Lead Plastic Dual-In-Line Package (PDIP), JEDEC MS-001, 0.300" Wide

Devices also available in Tape and Reel. Specify by appending the suffix letter "X" to the ordering code.

Connection Diagrams

CD4017B

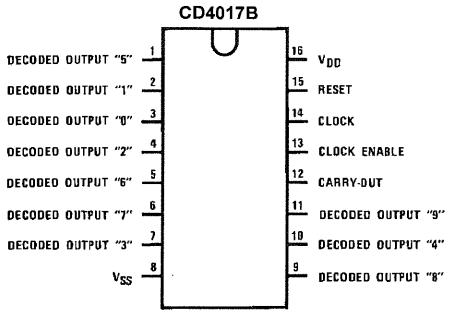

Top View

CD4022B

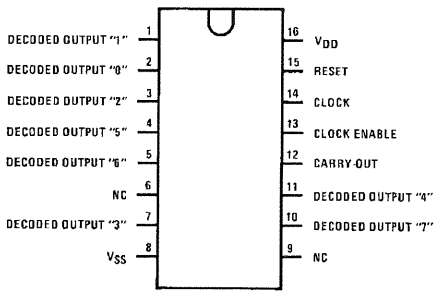

Top View

© 2004 Fairchild Semiconductor Corporation

Logic Diagrams

CD4017B

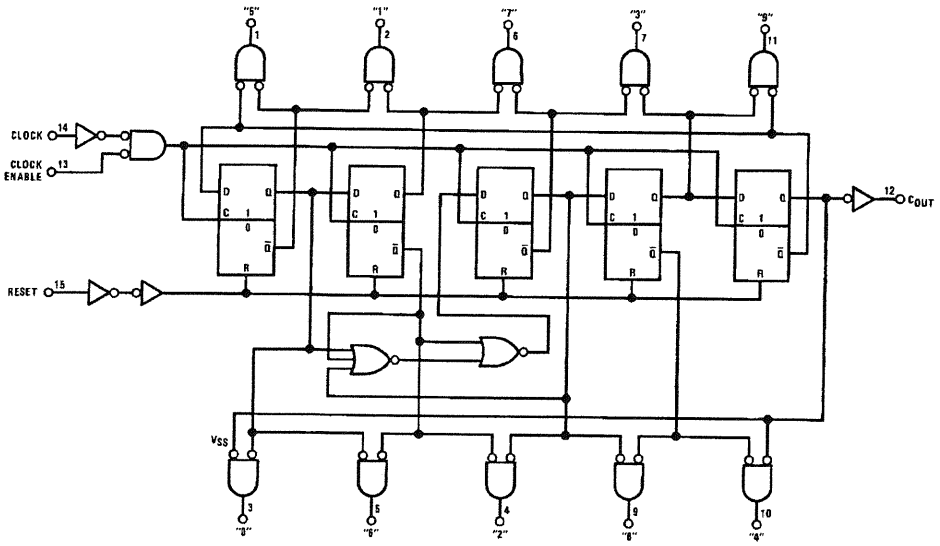

Terminal No. 8 = GND

Terminal No. 16 = V_{DD}

CD4022B

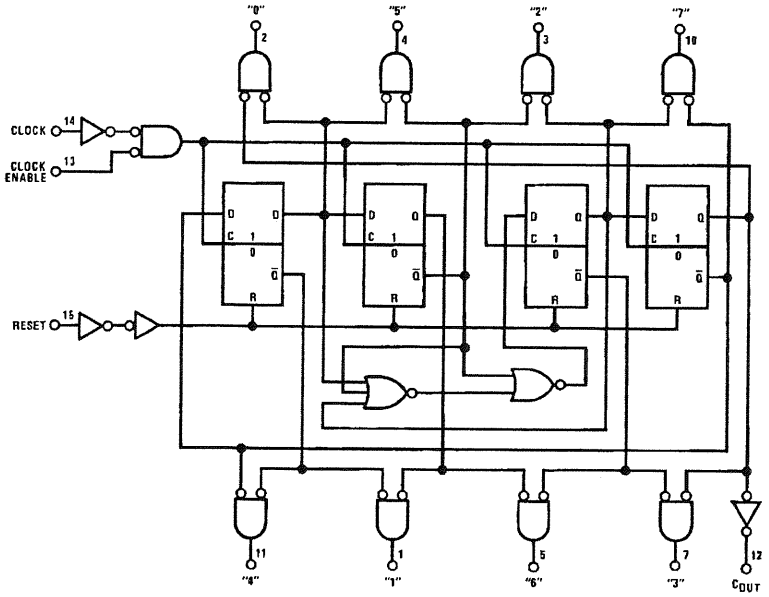

Terminal No. 16 = V_{DD}

Terminal No. 8 = GND

Absolute Maximum Ratings (Note 1)

(Note 2)

DC Supply Voltage (V_{DD})	−0.5 V_{DC} to +18 V_{DC}
Input Voltage (V_{IN})	−0.5 V_{DC} to V_{DD} +0.5 V_{DC}
Storage Temperature (T_S)	−65°C to +150°C
Power Dissipation (P_D)	
Dual-In-Line	700 mW
Small Outline	500 mW
Lead Temperature (T_L)	
(Soldering, 10 seconds)	260°C

Recommended Operating Conditions (Note 2)

DC Supply Voltage (V_{DD})	+3 V_{DC} to +15 V_{DC}
Input Voltage (V_{IN})	0 to V_{DD} V_{DC}
Operating Temperature Range (T_A)	−55°C to +125°C

Note 1: "Absolute Maximum Ratings" are those values beyond which the safety of the device cannot be guaranteed, they are not meant to imply that the devices should be operated at these limits. The table of "Recommended Operating Conditions" and "Electrical Characteristics" provides conditions for actual device operation.

Note 2: V_{SS} = 0V unless otherwise specified.

DC Electrical Characteristics (Note 2)

Symbol	Parameter	Conditions	−55°C		+25°			+125°C		Units
			Min	Max	Min	Typ	Max	Min	Max	
I_{DD}	Quiescent Device Current	V_{DD} = 5V		5		0.3	5		150	μA
		V_{DD} = 10V		10		0.5	10		300	
		V_{DD} = 15V		20		1.0	20		600	
V_{OL}	LOW Level Output Voltage	$\|I_O\|$ < 1.0 μA								V
		V_{DD} = 5V		0.05		0	0.05		0.05	
		V_{DD} = 10V		0.05		0	0.05		0.05	
		V_{DD} = 15V		0.05		0	0.05		0.05	
V_{OH}	HIGH Level Output Voltage	$\|I_O\|$ < 1.0 μA								V
		V_{DD} = 5V	4.95		4.95	5		4.95		
		V_{DD} = 10V	9.95		9.95	10		9.95		
		V_{DD} = 15V	14.95		14.95	15		14.95		
V_{IL}	LOW Level Input Voltage	$\|I_O\|$ < 1.0 μA								V
		V_{DD} = 5V, V_O = 0.5V or 4.5V		1.5			1.5		1.5	
		V_{DD} = 10V, V_O = 1.0V or 9.0V		3.0			3.0		3.0	
		V_{DD} = 15V, V_O = 1.5V or 13.5V		4.0			4.0		4.0	
V_{IH}	HIGH Level Input Voltage	$\|I_O\|$ < 1.0 μA								V
		V_{DD} = 5V, V_O = 0.5V or 4.5V	3.5		3.5			3.5		
		V_{DD} = 10V, V_O = 1.0V or 9.0V	7.0		7.0			7.0		
		V_{DD} = 15V, V_O = 1.5V or 13.5V	11.0		11.0			11.0		
I_{OL}	LOW Level Output Current (Note 3)	V_{DD} = 5V, V_O = 0.4V	0.64		0.51	0.88		0.36		mA
		V_{DD} = 10V, V_O = 0.5V	1.6		1.3	2.25		0.9		
		V_{DD} = 15V, V_O = 1.5V	4.2		3.4	8.8		2.4		
I_{OH}	HIGH Level Output Current (Note 3)	V_{DD} = 5V, V_O = 4.6V	−0.25		−0.2	−0.36		−0.14		mA
		V_{DD} = 10V, V_O = 9.5V	−0.62		−0.5	−0.9		−0.35		
		V_{DD} = 15V, V_O = 13.5V	−1.8		−1.5	−3.5		−1.1		
I_{IN}	Input Current	V_{DD} = 15V, V_{IN} = 0V		−0.1		-10^{-5}	−0.1		−1.0	μA
		V_{DD} = 15V, V_{IN} = 15V		0.1		10^{-5}	0.1		1.0	

Note 3: I_{OL} and I_{OH} are tested one output at a time.

Timing Diagrams

CD4017B

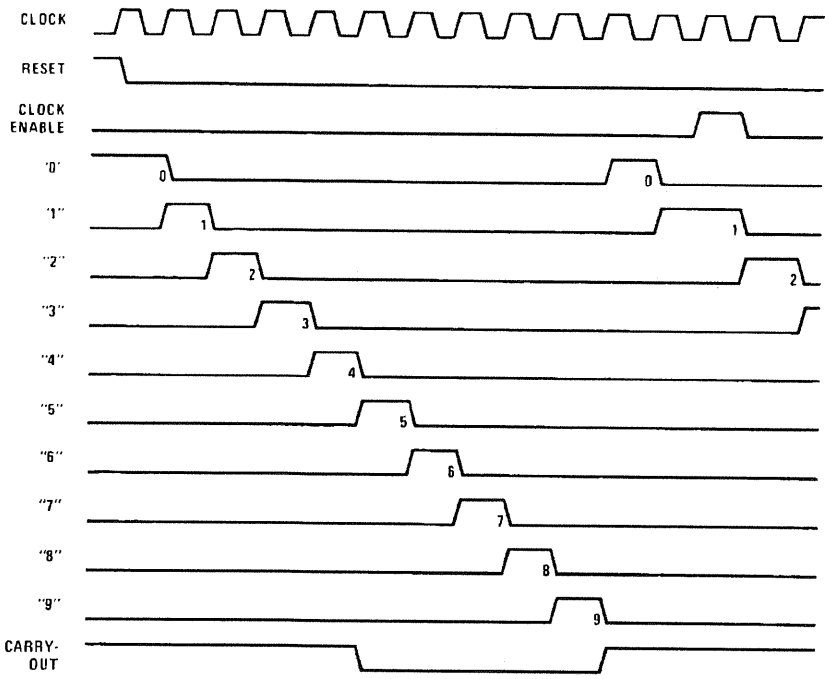

CD4022B

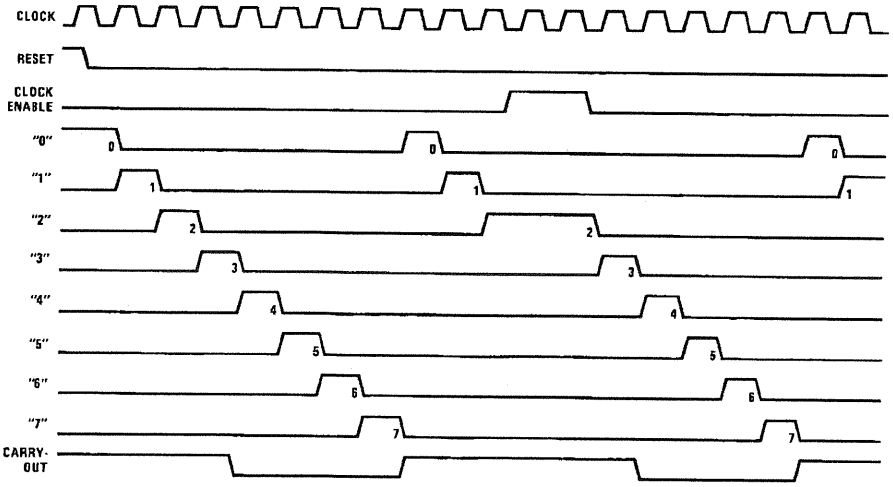

MC14049B, MC14050B

Hex Buffer

The MC14049B Hex Inverter/Buffer and MC14050B Noninverting Hex Buffer are constructed with MOS P–Channel and N–Channel enhancement mode devices in a single monolithic structure. These complementary MOS devices find primary use where low power dissipation and/or high noise immunity is desired. These devices provide logic level conversion using only one supply voltage, V_{DD}.

The input–signal high level (V_{IH}) can exceed the V_{DD} supply voltage for logic level conversions. Two TTL/DTL loads can be driven when the devices are used as a CMOS–to–TTL/DTL converter ($V_{DD} = 5.0$ V, $V_{OL} \leq 0.4$ V, $I_{OL} \geq 3.2$ mA).

Note that pins 13 and 16 are not connected internally on these devices; consequently connections to these terminals will not affect circuit operation.

Features

- High Source and Sink Currents
- High–to–Low Level Converter
- Supply Voltage Range = 3.0 V to 18 V
- V_{IN} can exceed V_{DD}
- Meets JEDEC B Specifications
- Improved ESD Protection On All Inputs
- Pb–Free Packages are Available*

MAXIMUM RATINGS (Voltages Referenced to V_{SS})

Symbol	Parameter	Value	Unit
V_{DD}	DC Supply Voltage Range	−0.5 to +18.0	V
V_{in}	Input Voltage Range (DC or Transient)	−0.5 to +18.0	V
V_{out}	Output Voltage Range (DC or Transient)	−0.5 to V_{DD} + 0.5	V
I_{in}	Input Current (DC or Transient) per Pin	±10	mA
I_{out}	Output Current (DC or Transient) per Pin	±45	mA
P_D	Power Dissipation, per Package (Note 1) (Plastic) (SOIC)	825 740	mW
T_A	Ambient Temperature Range	−55 to +125	°C
T_{stg}	Storage Temperature Range	−65 to +150	°C
T_L	Lead Temperature (8–Second Soldering)	260	°C

1. Temperature Derating: See Figure 3.

This device contains protection circuitry to protect the inputs against damage due to high static voltages or electric fields referenced to the V_{SS} pin only. Extra precautions must be taken to avoid applications of any voltage higher than the maximum rated voltages to this high–impedance circuit. For proper operation, the ranges $V_{SS} \leq V_{in} \leq 18$ V and $V_{SS} \leq V_{out} \leq V_{DD}$ are recommended.

Unused inputs must always be tied to an appropriate logic voltage level (e.g., either V_{SS} or V_{DD}). Unused outputs must be left open.

*For additional information on our Pb–Free strategy and soldering details, please download the ON Semiconductor Soldering and Mounting Techniques Reference Manual, SOLDERRM/D.

ON Semiconductor®

http://onsemi.com

MARKING DIAGRAMS

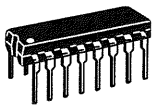

PDIP–16
P SUFFIX
CASE 648

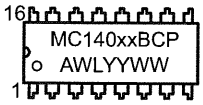

SOIC–16
D SUFFIX
CASE 751B

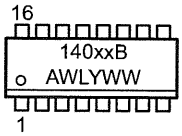

TSSOP–16
DT SUFFIX
CASE 948F

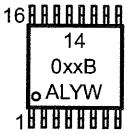

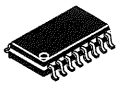

SOEIAJ–16
F SUFFIX
CASE 966

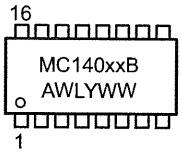

xx	= Specific Device Code
A	= Assembly Location
WL, L	= Wafer Lot
YY, Y	= Year
WW, W	= Work Week

ORDERING INFORMATION

See detailed ordering and shipping information in the package dimensions section on page 2 of this data sheet.

© Semiconductor Components Industries, LLC, 2005

PIN ASSIGNMENT

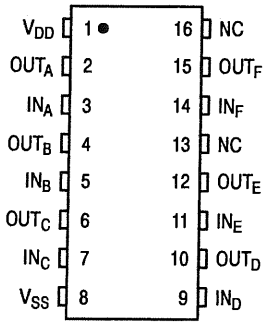

LOGIC DIAGRAM

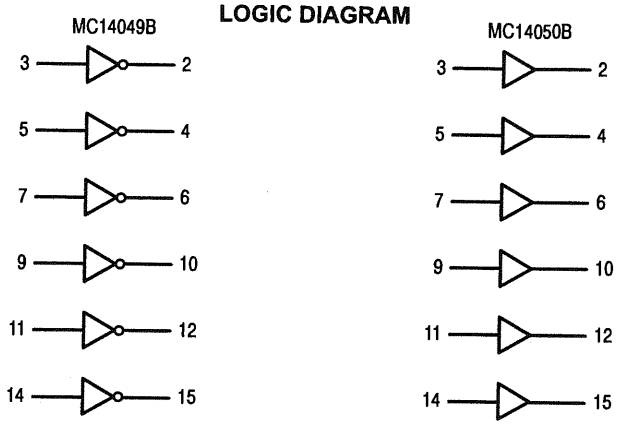

NC = PIN 13, 16
V_{SS} = PIN 8
V_{DD} = PIN 1

NC = PIN 13, 16
V_{SS} = PIN 8
V_{DD} = PIN 1

ORDERING INFORMATION

Device	Package	Shipping†
MC14049BCP	PDIP−16	500 Units / Rail
MC14049BCPG	PDIP−16 (Pb−Free)	500 Units / Rail
MC14049BD	SOIC−16	48 Units / Rail
MC14049BDG	SOIC−16 (Pb−Free)	48 Units / Rail
MC14049BDR2	SOIC−16	2500 Units / Tape & Reel
MC14049BDR2G	SOIC−16 (Pb−Free)	2500 Units / Tape & Reel
MC14049BFEL	SOEIAJ−16	2000 Units / Tape & Reel
MC14050BCP	PDIP−16	500 Units / Rail
MC14050BCPG	PDIP−16 (Pb−Free)	500 Units / Rail
MC14050BD	SOIC−16	48 Units / Rail
MC14050BDR2	SOIC−16	2500 Units / Tape & Reel
MC14050BDR2G	SOIC−16 (Pb−Free)	2500 Units / Tape & Reel
MC14050BDT	TSSOP−16*	96 Units / Rail
MC14050BDTR2	TSSOP−16*	2500 Units / Tape & Reel
MC14050BFEL	SOEIAJ−16	2000 Units / Tape & Reel
MC14050BFELG	SOEIAJ−16 (Pb−Free)	2000 Units / Tape & Reel

†For information on tape and reel specifications, including part orientation and tape sizes, please refer to our Tape and Reel Packaging Specifications Brochure, BRD8011/D.
*This package is inherently Pb−Free.

FAIRCHILD SEMICONDUCTOR™

October 1987
Revised January 1999

CD4020BC • CD4040BC • CD4060BC
14-Stage Ripple Carry Binary Counters • 12-Stage Ripple Carry Binary Counters • 14-Stage Ripple Carry Binary Counters

General Description

The CD4020BC, CD4060BC are 14-stage ripple carry binary counters, and the CD4040BC is a 12-stage ripple carry binary counter. The counters are advanced one count on the negative transition of each clock pulse. The counters are reset to the zero state by a logical "1" at the reset input independent of clock.

Features

- Wide supply voltage range: 1.0V to 15V
- High noise immunity: 0.45 V_{DD} (typ.)
- Low power TTL compatibility: Fan out of 2 driving 74L or 1 driving 74LS
- Medium speed operation: 8 MHz typ. at V_{DD} = 10V
- Schmitt trigger clock input

Ordering Code:

Order Number	Package Number	Package Description
CD4020BCM	M16A	16-Lead Small Outline Integrated Circuit (SOIC), JEDEC MS-012, 0.150" Narrow
CD4020BCN	N16E	16-Lead Plastic Dual-In-Line Package (PDIP), JEDEC MS-001, 0.300" Wide
CD4040BCM	M16A	16-Lead Small Outline Integrated Circuit (SOIC), JEDEC MS-012, 0.150" Narrow
CD4040BCSJ	M16D	16-Lead Small Outline Package (SOP), EIAJ TYPE II, 5.3mm Wide
CD4040BCN	N16E	16-Lead Plastic Dual-In-Line Package (PDIP), JEDEC MS-001, 0.300" Wide
CD4060BCM	M16A	16-Lead Small Outline Integrated Circuit (SOIC), JEDEC MS-012, 0.150" Narrow
CD4060BCN	N16E	16-Lead Plastic Dual-In-Line Package (PDIP), JEDEC MS-001, 0.300" Wide

Devices also available in Tape and Reel. Specify by appending the suffix letter "X" to the ordering code.

Connection Diagrams

Pin Assignments for DIP and SOIC
CD4020BC

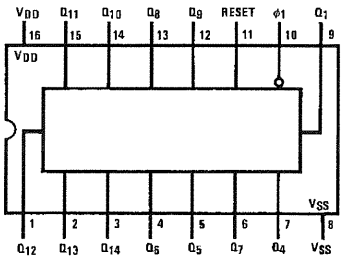

Top View

Pin Assignments for DIP, SOIC and SOP
CD4040BC

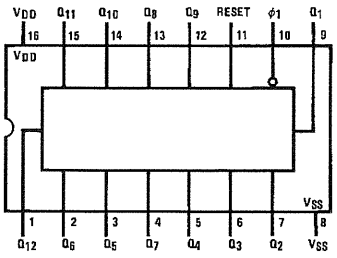

Top View

© 1999 Fairchild Semiconductor Corporation

Connection Diagrams (Continued)

Pin Assignments for DIP and SOIC

CD4060BC

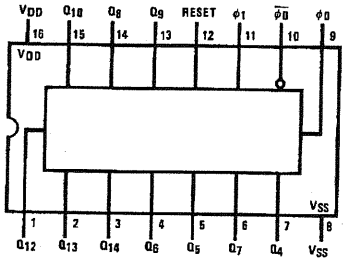

Top View

Schematic Diagrams

CD4020BC

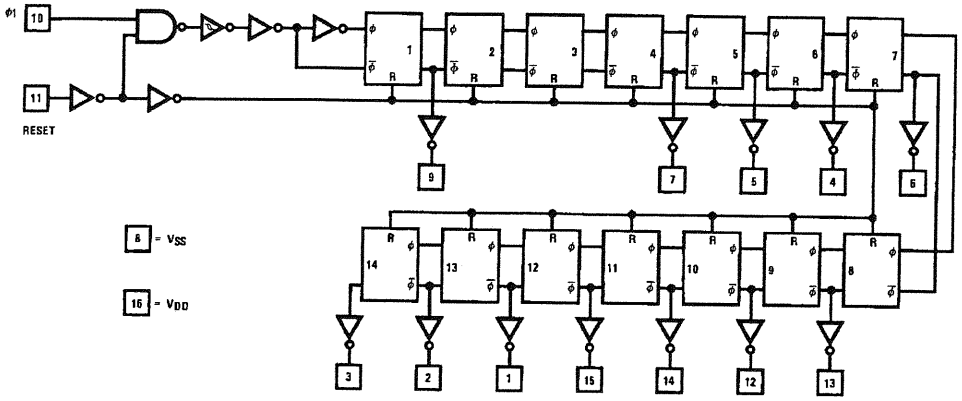

CD4040BC

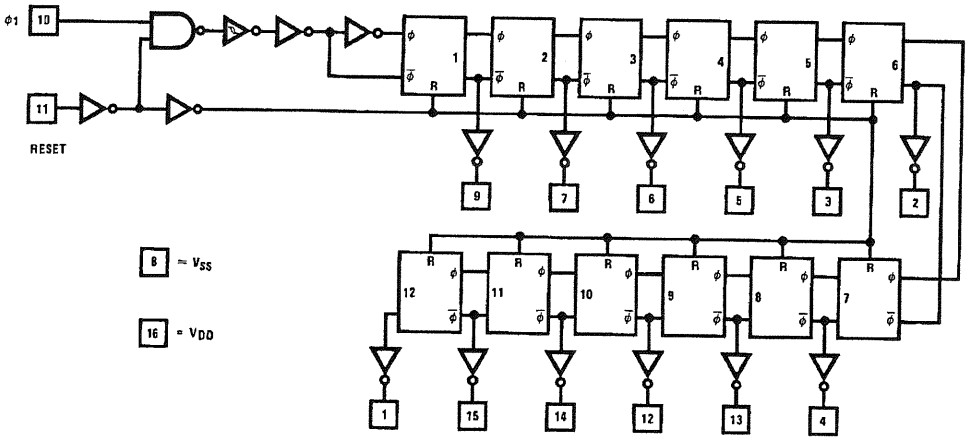

CD4060BC

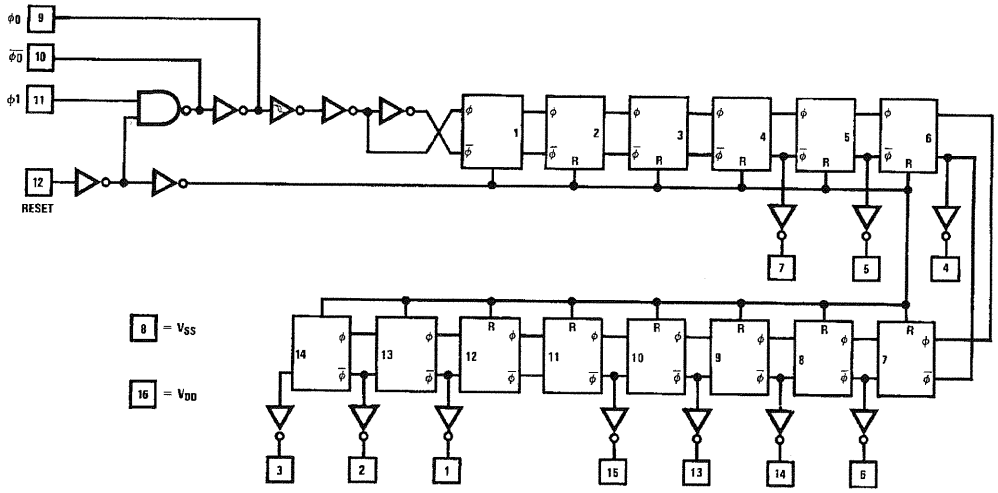

CD4060B Typical Oscillator Connections

RC Oscillator

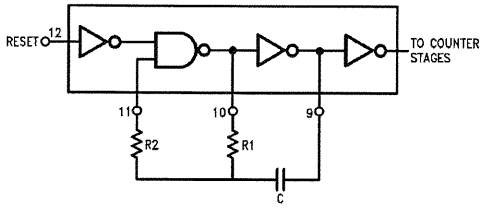

Crystal Oscillator

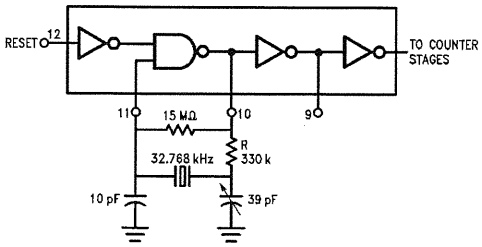

National Semiconductor

August 2002

LM193/LM293/LM393/LM2903
Low Power Low Offset Voltage Dual Comparators

General Description

The LM193 series consists of two independent precision voltage comparators with an offset voltage specification as low as 2.0 mV max for two comparators which were designed specifically to operate from a single power supply over a wide range of voltages. Operation from split power supplies is also possible and the low power supply current drain is independent of the magnitude of the power supply voltage. These comparators also have a unique characteristic in that the input common-mode voltage range includes ground, even though operated from a single power supply voltage.

Application areas include limit comparators, simple analog to digital converters; pulse, squarewave and time delay generators; wide range VCO; MOS clock timers; multivibrators and high voltage digital logic gates. The LM193 series was designed to directly interface with TTL and CMOS. When operated from both plus and minus power supplies, the LM193 series will directly interface with MOS logic where their low power drain is a distinct advantage over standard comparators.

The LM393 and LM2903 parts are available in National's innovative thin micro SMD package with 8 (12 mil) large bumps.

Advantages

- High precision comparators
- Reduced V_{OS} drift over temperature
- Eliminates need for dual supplies
- Allows sensing near ground
- Compatible with all forms of logic
- Power drain suitable for battery operation

Features

- Wide supply
  - — Voltage range: 2.0V to 36V
  - — Single or dual supplies: ±1.0V to ±18V
- Very low supply current drain (0.4 mA) — independent of supply voltage
- Low input biasing current: 25 nA
- Low input offset current: ±5 nA
- Maximum offset voltage: ±3 mV
- Input common-mode voltage range includes ground
- Differential input voltage range equal to the power supply voltage
- Low output saturation voltage,: 250 mV at 4 mA
- Output voltage compatible with TTL, DTL, ECL, MOS and CMOS logic systems
- Available in the 8-Bump (12 mil) micro SMD package
- See AN-1112 for micro SMD considerations

Squarewave Oscillator

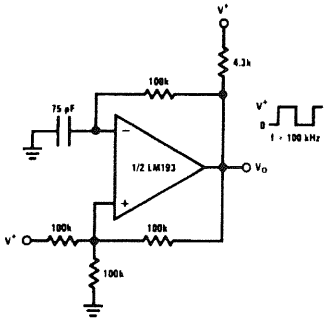

00570938

Non-Inverting Comparator with Hysteresis

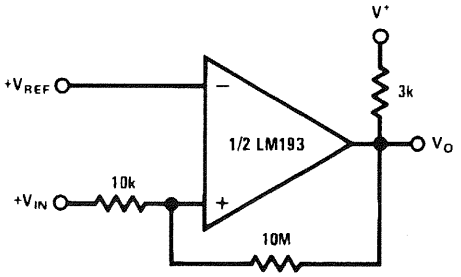

00570909

Schematic and Connection Diagrams

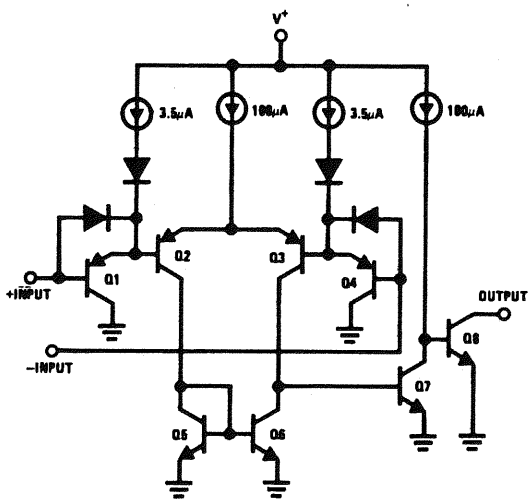

00570902

Metal Can Package

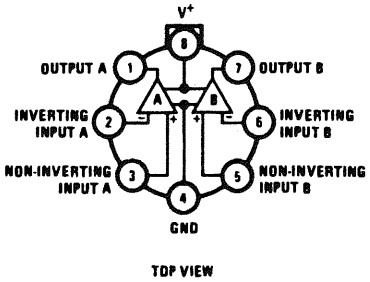

00570903

Dual-In-Line/SOIC Package

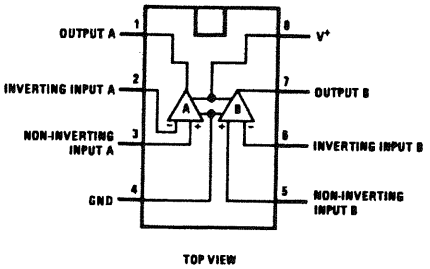

00570901

micro SMD

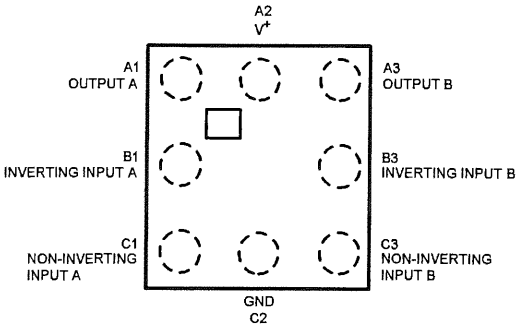

00570945

Top View

micro SMD Marking

XT = Date Code

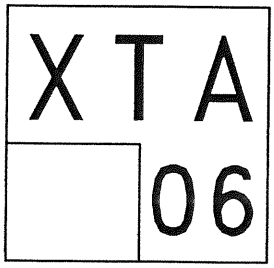

Pin A1 Corner
Pin A1 is identified by lower left corner with respect to the text.

00570946

Top View

National Semiconductor

February 2003

LM3914
Dot/Bar Display Driver

General Description

The LM3914 is a monolithic integrated circuit that senses analog voltage levels and drives 10 LEDs, providing a linear analog display. A single pin changes the display from a moving dot to a bar graph. Current drive to the LEDs is regulated and programmable, eliminating the need for resistors. This feature is one that allows operation of the whole system from less than 3V.

The circuit contains its own adjustable reference and accurate 10-step voltage divider. The low-bias-current input buffer accepts signals down to ground, or V^-, yet needs no protection against inputs of 35V above or below ground. The buffer drives 10 individual comparators referenced to the precision divider. Indication non-linearity can thus be held typically to ½%, even over a wide temperature range.

Versatility was designed into the LM3914 so that controller, visual alarm, and expanded scale functions are easily added on to the display system. The circuit can drive LEDs of many colors, or low-current incandescent lamps. Many LM3914s can be "chained" to form displays of 20 to over 100 segments. Both ends of the voltage divider are externally available so that 2 drivers can be made into a zero-center meter.

The LM3914 is very easy to apply as an analog meter circuit. A 1.2V full-scale meter requires only 1 resistor and a single 3V to 15V supply in addition to the 10 display LEDs. If the 1 resistor is a pot, it becomes the LED brightness control. The simplified block diagram illustrates this extremely simple external circuitry.

When in the dot mode, there is a small amount of overlap or "fade" (about 1 mV) between segments. This assures that at no time will all LEDs be "OFF", and thus any ambiguous display is avoided. Various novel displays are possible.

Much of the display flexibility derives from the fact that all outputs are individual, DC regulated currents. Various effects can be achieved by modulating these currents. The individual outputs can drive a transistor as well as a LED at the same time, so controller functions including "staging" control can be performed. The LM3914 can also act as a programmer, or sequencer.

The LM3914 is rated for operation from 0°C to +70°C. The LM3914N-1 is available in an 18-lead molded (N) package.

The following typical application illustrates adjusting of the reference to a desired value, and proper grounding for accurate operation, and avoiding oscillations.

Features

- Drives LEDs, LCDs or vacuum fluorescents
- Bar or dot display mode externally selectable by user
- Expandable to displays of 100 steps
- Internal voltage reference from 1.2V to 12V
- Operates with single supply of less than 3V
- Inputs operate down to ground
- Output current programmable from 2 mA to 30 mA
- No multiplex switching or interaction between outputs
- Input withstands ±35V without damage or false outputs
- LED driver outputs are current regulated, open-collectors
- Outputs can interface with TTL or CMOS logic
- The internal 10-step divider is floating and can be referenced to a wide range of voltages

© 2004 National Semiconductor Corporation

Typical Applications

0V to 5V Bar Graph Meter

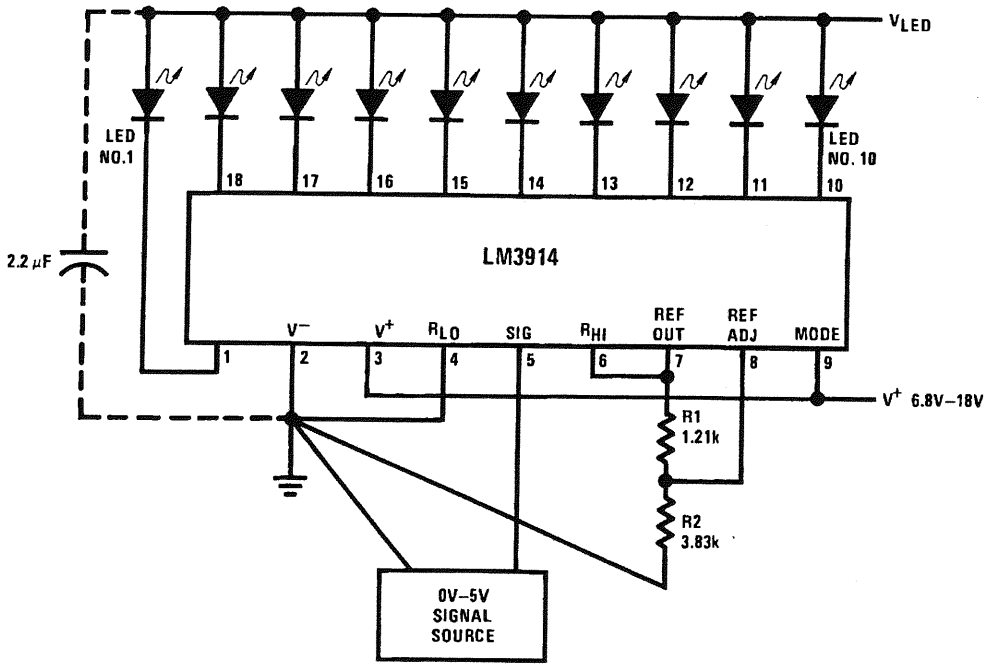

00797001

$$\text{Ref Out V} = 1.25\left(1 + \frac{R2}{R1}\right)$$

$$I_{LED} \cong \frac{12.5}{R1}$$

Note: Grounding method is typical of *all* uses. The 2.2µF tantalum or 10 µF aluminum electrolytic capacitor is needed if leads to the LED supply are 6" or longer.

Absolute Maximum Ratings (Note 1)

If Military/Aerospace specified devices are required, please contact the National Semiconductor Sales Office/ Distributors for availability and specifications.

Power Dissipation (Note 6)	
Molded DIP (N)	1365 mW
Supply Voltage	25V
Voltage on Output Drivers	25V
Input Signal Overvoltage (Note 4)	±35V
Divider Voltage	−100 mV to V^+
Reference Load Current	10 mA
Storage Temperature Range	−55˚C to +150˚C
Soldering Information	
Dual-In-Line Package	
Soldering (10 seconds)	260˚C
Plastic Chip Carrier Package	
Vapor Phase (60 seconds)	215˚C
Infrared (15 seconds)	220˚C

See AN-450 "Surface Mounting Methods and Their Effect on Product Reliability" for other methods of soldering surface mount devices.

Electrical Characteristics (Notes 2, 4)

Parameter	Conditions (Note 2)		Min	Typ	Max	Units
COMPARATOR						
Offset Voltage, Buffer and First Comparator	$0V \le V_{RLO} = V_{RHI} \le 12V$, $I_{LED} = 1$ mA			3	10	mV
Offset Voltage, Buffer and Any Other Comparator	$0V \le V_{RLO} = V_{RHI} \le 12V$, $I_{LED} = 1$ mA			3	15	mV
Gain ($\Delta I_{LED}/\Delta V_{IN}$)	$I_{L(REF)} = 2$ mA, $I_{LED} = 10$ mA		3	8		mA/mV
Input Bias Current (at Pin 5)	$0V \le V_{IN} \le V^+ - 1.5V$			25	100	nA
Input Signal Overvoltage	No Change in Display		−35		35	V
VOLTAGE-DIVIDER						
Divider Resistance	Total, Pin 6 to 4		8	12	17	kΩ
Accuracy	(Note 3)			0.5	2	%
VOLTAGE REFERENCE						
Output Voltage	$0.1 \text{ mA} \le I_{L(REF)} \le 4$ mA, $V^+ = V_{LED} = 5V$		1.2	1.28	1.34	V
Line Regulation	$3V \le V^+ \le 18V$			0.01	0.03	%/V
Load Regulation	$0.1 \text{ mA} \le I_{L(REF)} \le 4$ mA, $V^+ = V_{LED} = 5V$			0.4	2	%
Output Voltage Change with Temperature	$0˚C \le T_A \le +70˚C$, $I_{L(REF)} = 1$ mA, $V^+ = 5V$			1		%
Adjust Pin Current				75	120	μA
OUTPUT DRIVERS						
LED Current	$V^+ = V_{LED} = 5V$, $I_{L(REF)} = 1$ mA		7	10	13	mA
LED Current Difference (Between Largest and Smallest LED Currents)	$V_{LED} = 5V$	$I_{LED} = 2$ mA		0.12	0.4	mA
		$I_{LED} = 20$ mA		1.2	3	
LED Current Regulation	$2V \le V_{LED} \le 17V$	$I_{LED} = 2$ mA		0.1	0.25	mA
		$I_{LED} = 20$ mA		1	3	
Dropout Voltage	$I_{LED(ON)} = 20$ mA, $V_{LED} = 5V$, $\Delta I_{LED} = 2$ mA				1.5	V
Saturation Voltage	$I_{LED} = 2.0$ mA, $I_{L(REF)} = 0.4$ mA			0.15	0.4	V
Output Leakage, Each Collector	(Bar Mode) (Note 5)			0.1	10	μA
Output Leakage	(Dot Mode) (Note 5)	Pins 10–18		0.1	10	μA
		Pin 1	60	150	450	μA
SUPPLY CURRENT						
Standby Supply Current (All Outputs Off)	$V^+ = 5V$, $I_{L(REF)} = 0.2$ mA			2.4	4.2	mA
	$V^+ = 20V$, $I_{L(REF)} = 1.0$ mA			6.1	9.2	mA

WP103HDT BRIGHT RED

Features

- LOW POWER CONSUMPTION.
- RELIABLE AND RUGGED.
- EXCELLENT UNIFORMITY OF LIGHT OUTPUT.
- SUITABLE FOR LEVEL INDICATOR.
- LONG LIFE - SOLID STATE RELIABILITY.
- RoHS COMPLIANT.

Description

The Bright Red source color devices are made with Gallium Phosphide Red Light Emitting Diode.

Package Dimensions

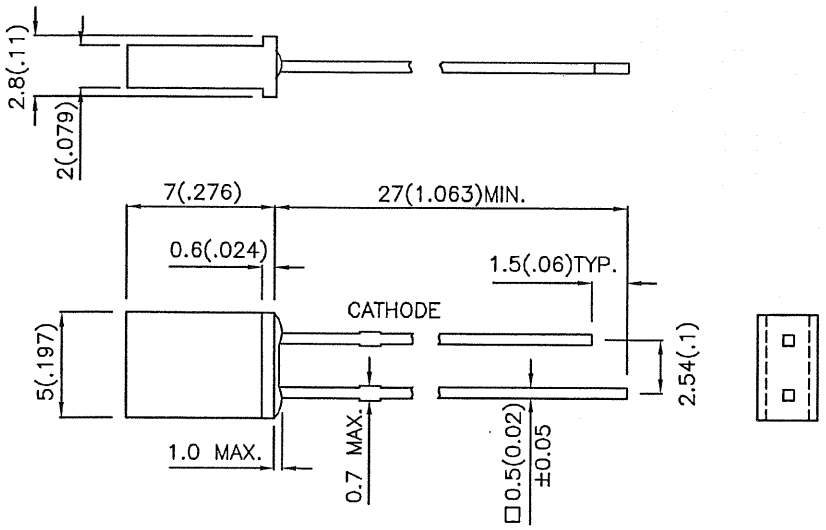

Notes:
1. All dimensions are in millimeters (inches).
2. Tolerance is ±0.25(0.01") unless otherwise noted.
3. Lead spacing is measured where the leads emerge from the package.
4. Specifications are subject to change without notice.

LEDs

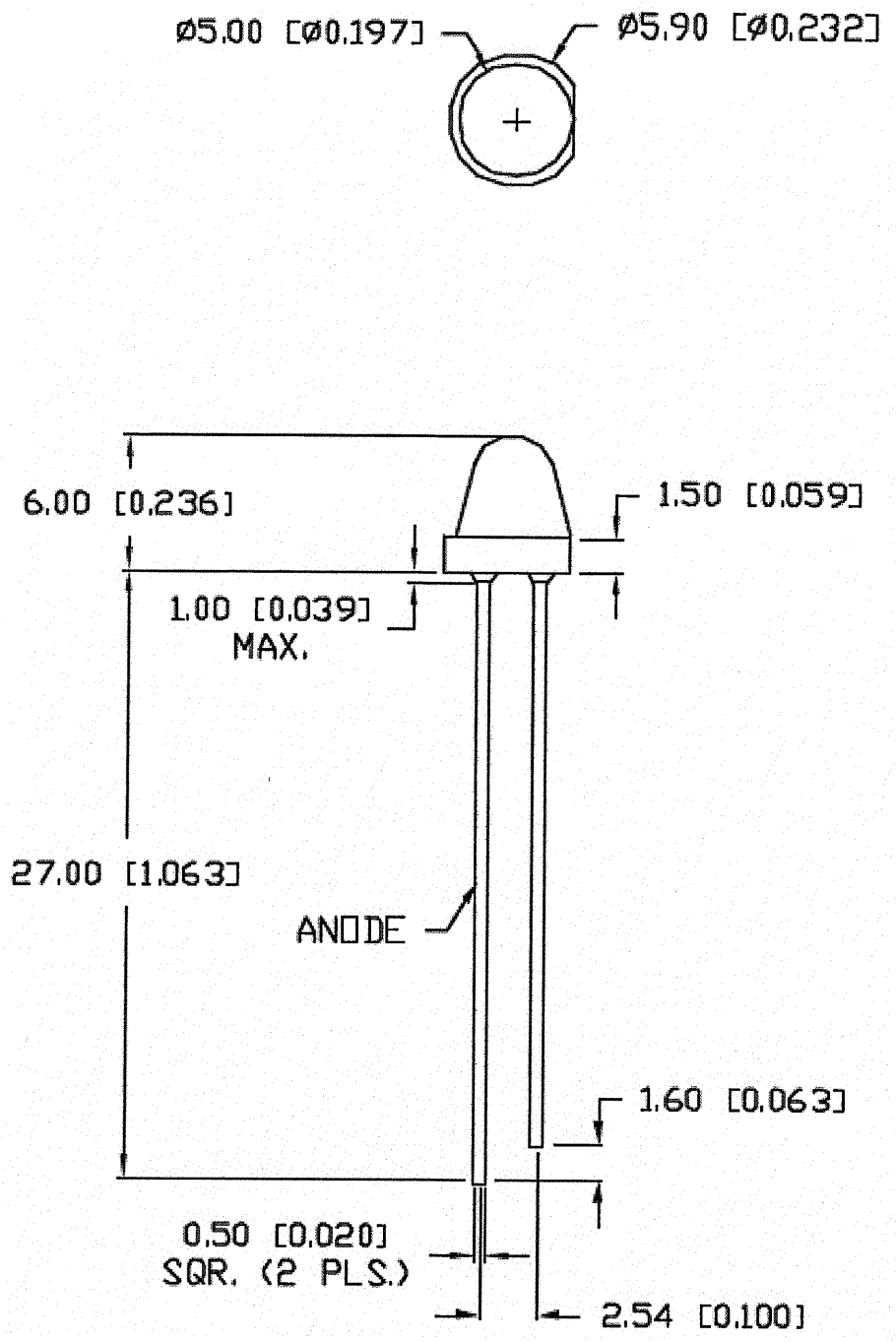
Ø5.00 [Ø0.197]
Ø5.90 [Ø0.232]
6.00 [0.236]
1.50 [0.059]
1.00 [0.039]
MAX.
27.00 [1.063]
ANODE
1.60 [0.063]
0.50 [0.020]
SQR. (2 PLS.)
2.54 [0.100]

National Semiconductor

August 2000

LM741 Operational Amplifier

General Description

The LM741 series are general purpose operational amplifiers which feature improved performance over industry standards like the LM709. They are direct, plug-in replacements for the 709C, LM201, MC1439 and 748 in most applications.

The amplifiers offer many features which make their application nearly foolproof: overload protection on the input and output, no latch-up when the common mode range is exceeded, as well as freedom from oscillations.

The LM741C is identical to the LM741/LM741A except that the LM741C has their performance guaranteed over a 0˚C to +70˚C temperature range, instead of −55˚C to +125˚C.

Features

Connection Diagrams

Metal Can Package

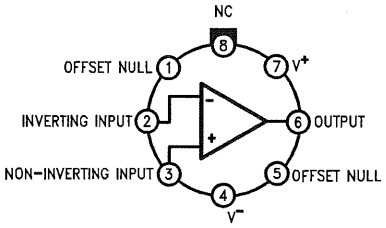

00934102

Note 1: LM741H is available per JM38510/10101

Order Number LM741H, LM741H/883 (Note 1), **LM741AH/883 or LM741CH**
See NS Package Number H08C

Dual-In-Line or S.O. Package

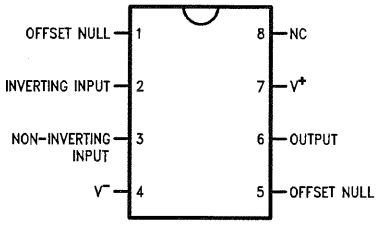

00934103

Order Number LM741J, LM741J/883, LM741CN
See NS Package Number J08A, M08A or N08E

Ceramic Flatpak

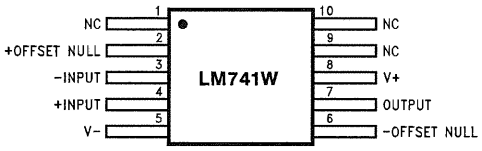

00934106

Order Number LM741W/883
See NS Package Number W10A

Typical Application

Offset Nulling Circuit

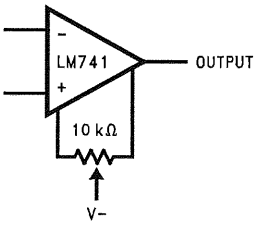

00934107

© 2004 National Semiconductor Corporation

Electrical Characteristics (Note 5) (Continued)

Note 3: For operation at elevated temperatures, these devices must be derated based on thermal resistance, and T_j max. (listed under "Absolute Maximum Ratings"). $T_j = T_A + (\theta_{jA} P_D)$.

Thermal Resistance	Cerdip (J)	DIP (N)	HO8 (H)	SO-8 (M)
θ_{jA} (Junction to Ambient)	100˚C/W	100˚C/W	170˚C/W	195˚C/W
θ_{jC} (Junction to Case)	N/A	N/A	25˚C/W	N/A

Note 4: For supply voltages less than ±15V, the absolute maximum input voltage is equal to the supply voltage.

Note 5: Unless otherwise specified, these specifications apply for V_S = ±15V, −55˚C ≤ T_A ≤ +125˚C (LM741/LM741A). For the LM741C/LM741E, these specifications are limited to 0˚C ≤ T_A ≤ +70˚C.

Note 6: Calculated value from: BW (MHz) = 0.35/Rise Time(µs).

Note 7: For military specifications see RETS741X for LM741 and RETS741AX for LM741A.

Note 8: Human body model, 1.5 kΩ in series with 100 pF.

Schematic Diagram

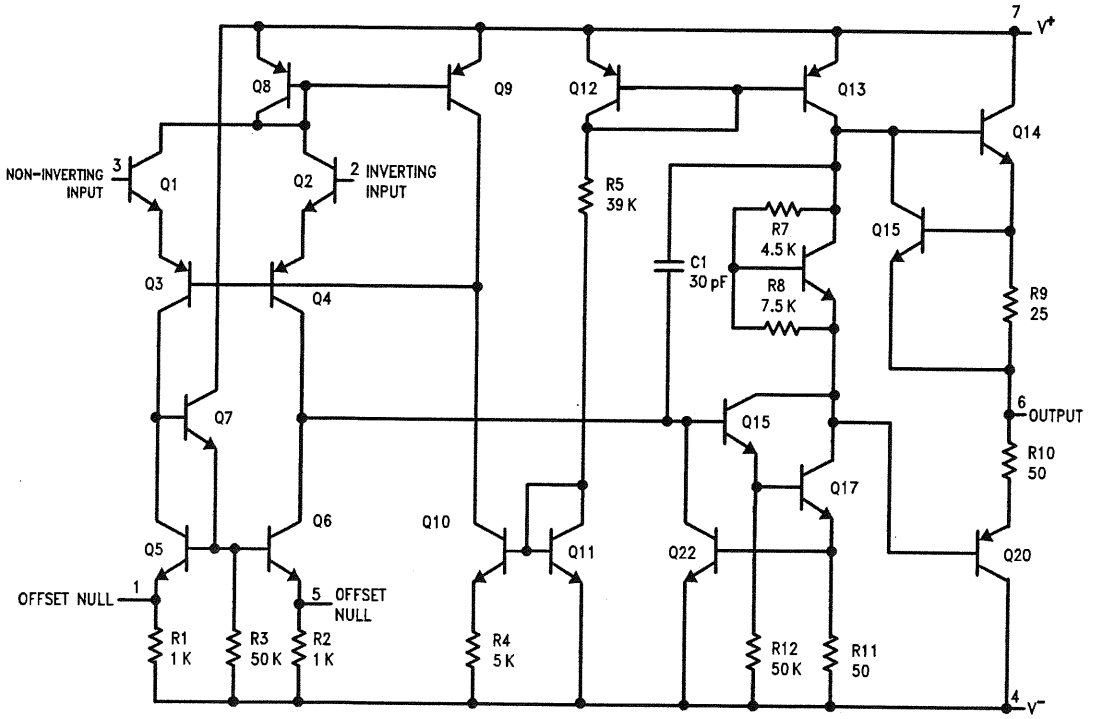

00934101

NPN high-voltage transistors BF458; BF459

FEATURES

- Low current (max. 100 mA)
- High voltage (max. 300 V).

APPLICATIONS

- Intended for video output stages in black-and-white and in colour television receivers.

DESCRIPTION

NPN transistors in a TO-126; SOT32 plastic package.

PINNING

PIN	DESCRIPTION
1	emitter
2	collector, connected to mounting base
3	base

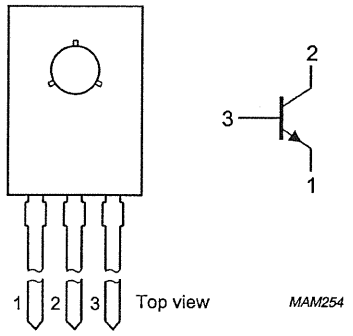

Fig.1 Simplified outline (TO-126; SOT32) and symbol.

LIMITING VALUES

In accordance with the Absolute Maximum Rating System (IEC 134).

SYMBOL	PARAMETER	CONDITIONS	MIN.	MAX.	UNIT
V_{CBO}	collector-base voltage	open emitter			
	BF458		–	250	V
	BF459		–	300	V
V_{CEO}	collector-emitter voltage	open base			
	BF458		–	250	V
	BF459		–	300	V
V_{EBO}	emitter-base voltage	open collector	–	5	V
I_C	collector current (DC)		–	100	mA
I_{CM}	peak collector current		–	300	mA
I_{BM}	peak base current		–	100	mA
P_{tot}	total power dissipation	$T_{mb} \leq 90$ °C	–	6	W
T_{stg}	storage temperature		–65	+150	°C
T_j	junction temperature		–	150	°C
T_{amb}	operating ambient temperature		–65	+150	°C

2N2219A 2N2222A

HIGH SPEED SWITCHES

DESCRIPTION

The 2N2219A and 2N2222A are silicon planar epitaxial NPN transistors in Jedec TO-39 (for 2N2219A) and in Jedec TO-18 (for 2N2222A) metal case. They are designed for high speed switching application at collector current up to 500mA, and feature useful current gain over a wide range of collector current, low leakage currents and low saturation voltage.

2N2219A approved to CECC 50002-100, 2N2222A approved to CECC 50002-101 available on request.

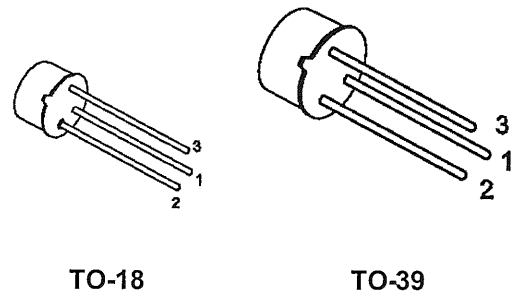

TO-18 TO-39

INTERNAL SCHEMATIC DIAGRAM

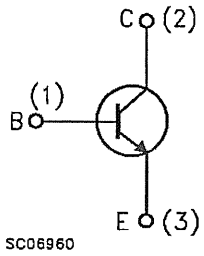

ABSOLUTE MAXIMUM RATINGS

Symbol	Parameter	Value	Unit
V_{CBO}	Collector-Base Voltage (I_E = 0)	75	V
V_{CEO}	Collector-Emitter Voltage (I_B = 0)	40	V
V_{EBO}	Emitter-Base Voltage (I_C = 0)	6	V
I_C	Collector Current	0.8	A
P_{tot}	Total Dissipation at $T_{amb} \leq 25$ °C		
	for **2N2219A**	0.8	W
	for **2N2222A**	0.5	W
	at $T_{case} \leq 25$ °C		
	for **2N2219A**	3	W
	for **2N2222A**	1.8	W
T_{stg}	Storage Temperature	-65 to 200	°C
T_j	Max. Operating Junction Temperature	175	°C

SEME LAB

2N3053

MECHANICAL DATA
Dimensions in mm (inches)

MEDIUM POWER SILICON NPN PLANAR TRANSISTOR

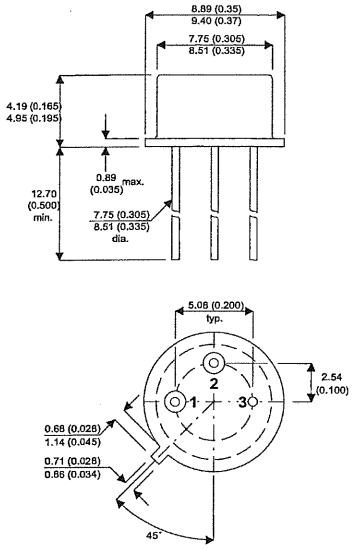

TO39 PACKAGE

Underside View

Pin 1 = Emitter Pin 2 = Base Pin 3 = Collector

FEATURES

- V_{CEO} = 40V
- I_C = 0.7A
- P_{tot} = 5W

ABSOLUTE MAXIMUM RATINGS (T_{case} = 25°C unless otherwise stated)

V_{CBO}	Collector – Base Voltage	60V
V_{CEO}	Collector – Emitter Voltage	40V
V_{CER}	Collector – Emitter Sustaining Voltage	50V
V_{CEX}	Collector - Emiiter Voltage	60V
V_{EBO}	Emitter-Base Voltage	5V
I_C	Collector Current	0.7A
P_{TOT}	Power Dissipation T_{amb} = 25°C	1W
	T_{case} = 25°C	5W
T_j	Junction Temperature	200°C
T_{stg}	Storage Temperature	–65 to 200°C
$R_{th(jc)}$	Thermal Resistance Junction to Case	35°C / W
$R_{th(ja)}$	Thermal Resistance Junction to Ambient	175°C / W

Central™ Semiconductor Corp.
145 Adams Avenue, Hauppauge, NY 11788 USA
Tel: (631) 435-1110 • Fax: (631) 435-1824
Manufacturers of World Class Discrete Semiconductors

2N4248
2N4249
2N4250
2N4250A

SILICON PNP TRANSISTOR

JEDEC TO-106 CASE

DESCRIPTION

The CENTRAL SEMICONDUCTOR 2N4248 Series Types are Silicon PNP Transistors designed for low level - low noise amplifier applications.

MAXIMUM RATINGS (T_A=25°C)

	SYMBOL	2N4248 2N4250	2N4249 2N4250A	UNIT
Collector-Base Voltage	V_{CBO}	40	60	V
Collector-Emitter Voltage	V_{CES}	40	60	V
Collector-Emitter Voltage	V_{CEO}	40	60	V
Emitter-Base Voltage	V_{EBO}	5.0	5.0	V
Power Dissipation	P_D	200	200	mW
Operating and Storage Junction Temperature	T_J, T_{stg}	-55 TO +150		°C

ELECTRICAL CHARACTERISTICS (T_A=25°C)

SYMBOL		2N4248 MIN	2N4248 MAX	2N4249 MIN	2N4249 MAX	2N4250 MIN	2N4250 MAX	2N4250A MIN	2N4250A MAX	UNIT
I_{CBO}	V_{CB}=40V (2N4250A V_{CB}=50V)		10		10		10		10	nA
I_{EBO}	V_{EB}=3.0V		20		20		20		20	nA
BV_{CBO}	I_C=10μA	40		60		40		60		V
BV_{CES}	I_C=10μA	40		60		40		60		V
BV_{CEO}	I_C=5.0mA	40		60		40		60		V
BV_{EBO}	I_E=10μA	5.0		5.0		5.0		5.0		V
$V_{CE(s)}$	I_C=10mA, I_B=0.5mA		0.25		0.25		0.25		0.25	V
$V_{BE(s)}$	I_C=10mA, I_B=0.5mA		0.9		0.9		0.9		0.9	V
h_{FE}	V_{CE}=5.0V, I_C=100μA	50		100	300	250	700	250	700	
h_{FE}	V_{CE}=5.0V, I_C=1.0mA	50		100		250		---		
h_{FE}	V_{CE}=5.0V, I_C=10mA	50		100		250		---		
f_T	V_{CE}=5.0V, I_C=0.5mA, f=20MHz	40		40		50		---		MHz
C_{ob}	V_{CB}=5.0V, f=1.0MHz		6.0		6.0		6.0		6.0	pF
C_{IB}	V_{EB}=0.5V, f=1.0MHz		16		16		16		---	pF
NF	Wide Band, V_{CE}=5.0V, I_C=20μA, Rs=100KΩ PBW=15.7kHz, f=10Hz TO 10kHz		---		3.0		2.0		2.0	dB
NF	Narrow Band, V_{CE}=5.0V, I_C=20μA, Rs=10KΩ PBW=150Hz, f=1.0kHz		---		3.0		2.0		2.0	dB

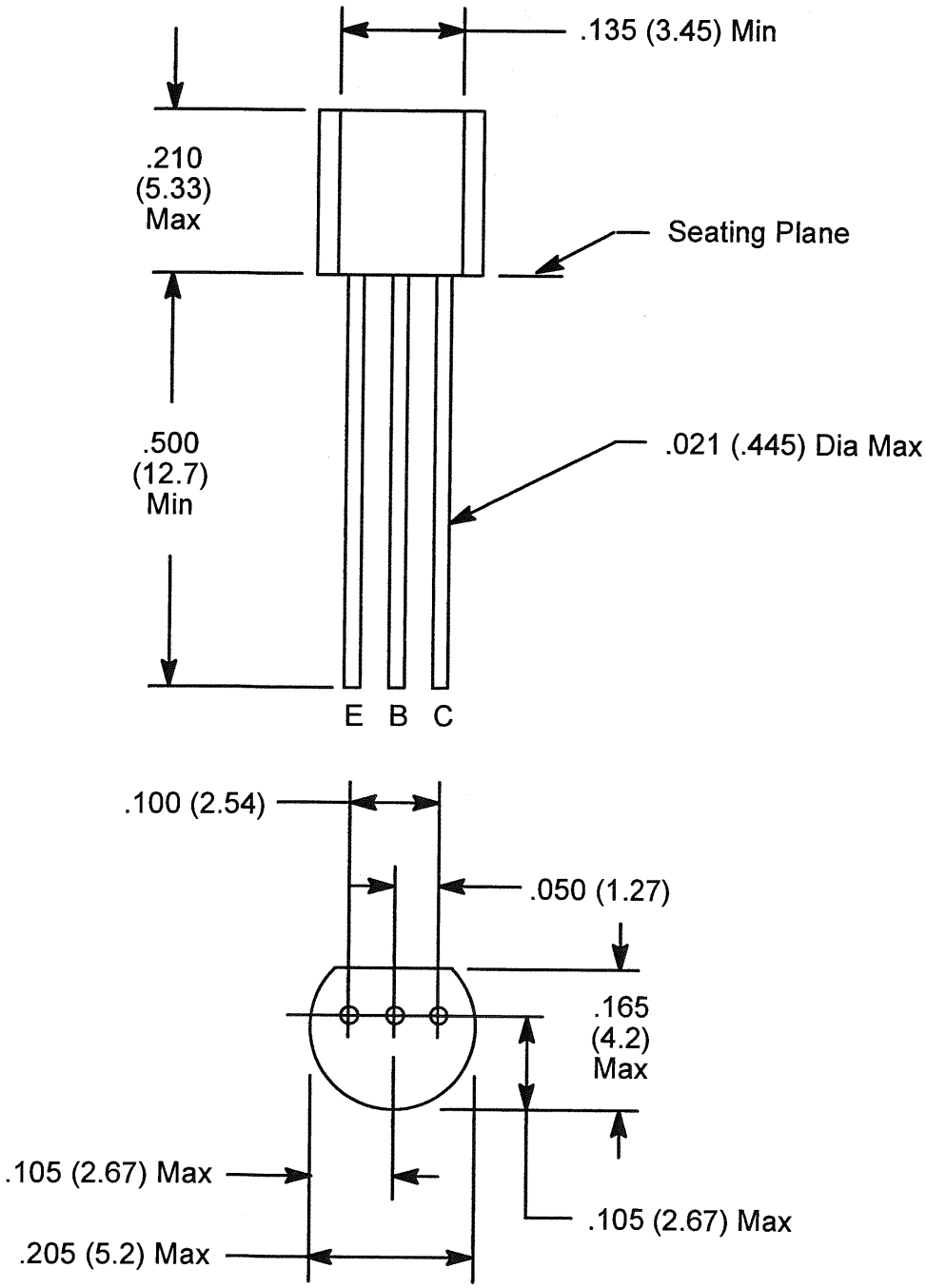
.135 (3.45) Min
.210
(5.33)
Max
Seating Plane
.500
(12.7)
Min
.021 (.445) Dia Max
E B C
.100 (2.54)
.050 (1.27)
.165
(4.2)
Max
.105 (2.67) Max
.105 (2.67) Max
.205 (5.2) Max

n-channel JFETs designed for . . .

Siliconix

Performance Curves NC
See Section 5

- **Analog Switches**
- **Commutators**
- **Choppers**

BENEFITS

- Low Cost
- Industry Standard Package
- Automatic Insertion Package
- Fast Switching
  $t_{rise} < 5$ ns (2N5638)
- Low Insertion Loss
  $R_{DS(on)} < 30\ \Omega$ (2N5638)
- Short Sample and Hold Aperture Time
  $C_{rss} < 4$ pF

TO-92
See Section 7

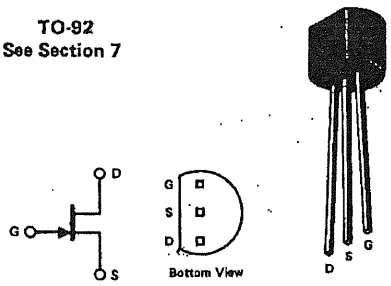

*ABSOLUTE MAXIMUM RATINGS (25°C)

Drain-Source Breakdown Voltage	30 V
Drain-Gate Breakdown Voltage	30 V
Source-Gate Breakdown Voltage	30 V
Forward Gate Current	10 mA
Total Device Dissipation at $T_{LEAD} = 25°C$	625 mW
Derate above 25°C	5.68 mW/°C
Operating Junction Temperature Range	-65 to +135°C
Storage Temperature Range	-65 to +150°C
Lead Temperature (1/16" from case for 10 seconds)	300°C

*ELECTRICAL CHARACTERISTICS (25°C unless otherwise noted)

		Characteristic		2N5638 Min	2N5638 Max	2N5639 Min	2N5639 Max	2N5640 Min	2N5640 Max	Unit	Test Conditions	
1	STATIC	BV_{GSS}	Gate-Source Breakdown Voltage	-30		-30		-30		V	$I_G = -10\ \mu A$, $V_{DS} = 0$	
2	STATIC	I_{GSS}	Gate Reverse Current		-1.0		-1.0		-1.0	nA	$V_{GS} = -15$ V, $V_{DS} = 0$	
3	STATIC	I_{GSS}	Gate Reverse Current		-1.0		-1.0		-1.0	μA	$V_{GS} = -15$ V, $V_{DS} = 0$	$T_A = +100°C$
4	STATIC	$I_{D(off)}$	Drain Cutoff Current		1.0		1.0		1.0	nA	$V_{DS} = 15$ V, $V_{GS} = -12$ V (2N5638)	
5	STATIC	$I_{D(off)}$	Drain Cutoff Current		1.0		1.0		1.0	μA	$V_{GS} = -8$ V (2N5639), $V_{GS} = -6$ V (2N5640)	$T_A = +100°C$
6	STATIC	I_{DSS}	Saturation Drain Current	50		25		5.0		mA	$V_{DS} = 20$ V, $V_{GS} = 0$ (Note 1)	
7	STATIC	$V_{DS(on)}$	Drain-Source ON Voltage		0.5		0.5		0.5	V	$V_{GS} = 0$, $I_D = 12$ mA (2N5638), $I_D = 6$ mA (2N5639), $I_D = 3$ mA (2N5640)	
8	STATIC	$r_{DS(on)}$	Static Drain-Source ON Resistance		30		60		100	Ω	$I_D = 1$ mA, $V_{GS} = 0$	
9	DYN	$r_{ds(on)}$	Drain-Source ON Resistance		30		60		100	Ω	$V_{GS} = 0$, $I_D = 0$	f = 1 kHz
10	DYN	C_{iss}	Common-Source Input Capacitance		10		10		10	pF	$V_{GS} = -12$ V, $V_{DS} = 0$	f = 1 MHz
11	DYN	C_{rss}	Common-Source Reverse Transfer Capacitance		4.0		4.0		4.0	pF	$V_{GS} = -12$ V, $V_{DS} = 0$	f = 1 MHz
12	SW	$t_{d(on)}$	Turn-On Delay Time		4.0		6.0		8.0	nsec	$V_{DD} = 10$ V, $V_{GS(on)} = 0$, $V_{GS(off)} = -10$ V; $I_{D(on)} = 12$ mA (2N5638), $I_{D(on)} = 6$ mA (2N5639), $I_{D(on)} = 3$ mA (2N5640); $R_L = 800\ \Omega$ (2N5638), $R_L = 1.6k\ \Omega$ (2N5639), $R_L = 3.2k\ \Omega$ (2N5640)	
13	SW	t_r	Rise Time		5.0		8.0		10	nsec		
14	SW	$t_{d(off)}$	Turn-OFF Delay Time		5.0		10		15	nsec		
15	SW	t_f	Fall Time		10		20		30	nsec		

* JEDEC registered data

NOTE:

1 Pulse test PW ≤ 300 μsec, duty cycle ≤ 3.0%

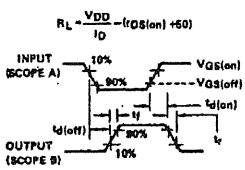

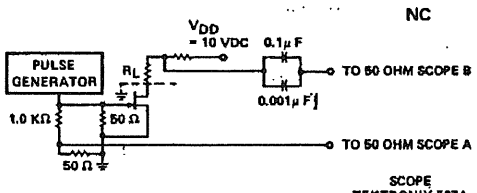

© 1979 Siliconix Incorporated

SLVS010P – JANUARY 1976 – REVISED JUNE 2002

- **3-Terminal Regulators**
- **Output Current up to 100 mA**
- **No External Components**
- **Internal Thermal-Overload Protection**
- **Internal Short-Circuit Current Limiting**
- **Direct Replacements for Fairchild μA78L00 Series**

D PACKAGE
(TOP VIEW)

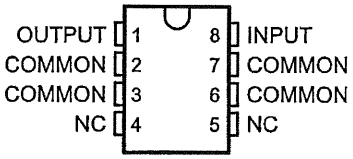

NC – No internal connection

LP PACKAGE
(TOP VIEW)

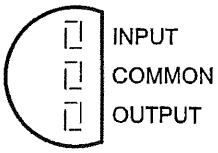

TO–226AA

PK PACKAGE
(TOP VIEW)

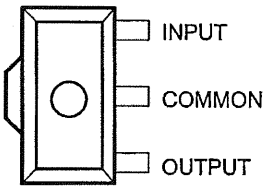

The center lead is in electrical contact with the tab.

description

This series of fixed-voltage integrated-circuit voltage regulators is designed for a wide range of applications. These applications include on-card regulation for elimination of noise and distribution problems associated with single-point regulation. In addition, they can be used with power-pass elements to make high-current voltage regulators. One of these regulators can deliver up to 100 mA of output current. The internal limiting and thermal-shutdown features of these regulators essentially make them immune to overload. When used as a replacement for a zener diode-resistor combination, an effective improvement in output impedance can be obtained, together with lower bias current.

The μA78L00C and μA78L00AC series are characterized for operation over the virtual junction temperature range of 0°C to 125°C. The μA78L05AI is characterized for operation over the virtual junction temperature range of –40°C to 125°C.

Please be aware that an important notice concerning availability, standard warranty, and use in critical applications of Texas Instruments semiconductor products and disclaimers thereto appears at the end of this data sheet.

PRODUCTION DATA information is current as of publication date. Products conform to specifications per the terms of Texas Instruments standard warranty. Production processing does not necessarily include testing of all parameters.

Copyright © 2002, Texas Instruments Incorporated

AVAILABLE OPTIONS

T_J	$V_{O(NOM)}$ (V)	PACKAGE					
		SMALL OUTLINE (D)		PLASTIC CYLINDRICAL (LP)		SOT-89 (PK)	
		OUTPUT VOLTAGE TOLERANCE					
		5%	10%	5%	10%	5%	10%
0°C to 125°C	2.6	µA78L02ACD	–	µA78L02ACLP	–	–	–
	5	µA78L05ACD	µA78L05CD	µA78L05ACLP	µA78L05CLP	µA78L05ACPK	µA78L05CPK
	6.2	–	–	µA78L06ACLP	–	µA78L06ACPK	–
	8	µA78L08ACD	µA78L08CD	µA78L08ACLP	–	µA78L08ACPK	µA78L08CPK
	9	µA78L09ACD	–	µA78L09ACLP	µA78L09CLP	µA78L09ACPK	–
	10	µA78L10ACD	–	µA78L10ACLP	–	µA78L10ACPK	–
	12	µA78L12ACD	–	µA78L12ACLP	–	µA78L12ACPK	–
	15	µA78L15ACD	–	µA78L15ACLP	–	µA78L15ACPK	–
–40°C to 125°C	5	–	–	µA78L05AILP	–	–	–

D and LP packages are available taped and reeled. Add the suffix R to the device type (e.g., µA78L05ACDR). The PK package is only available taped and reeled (do not add the suffix R to the device type).

schematic

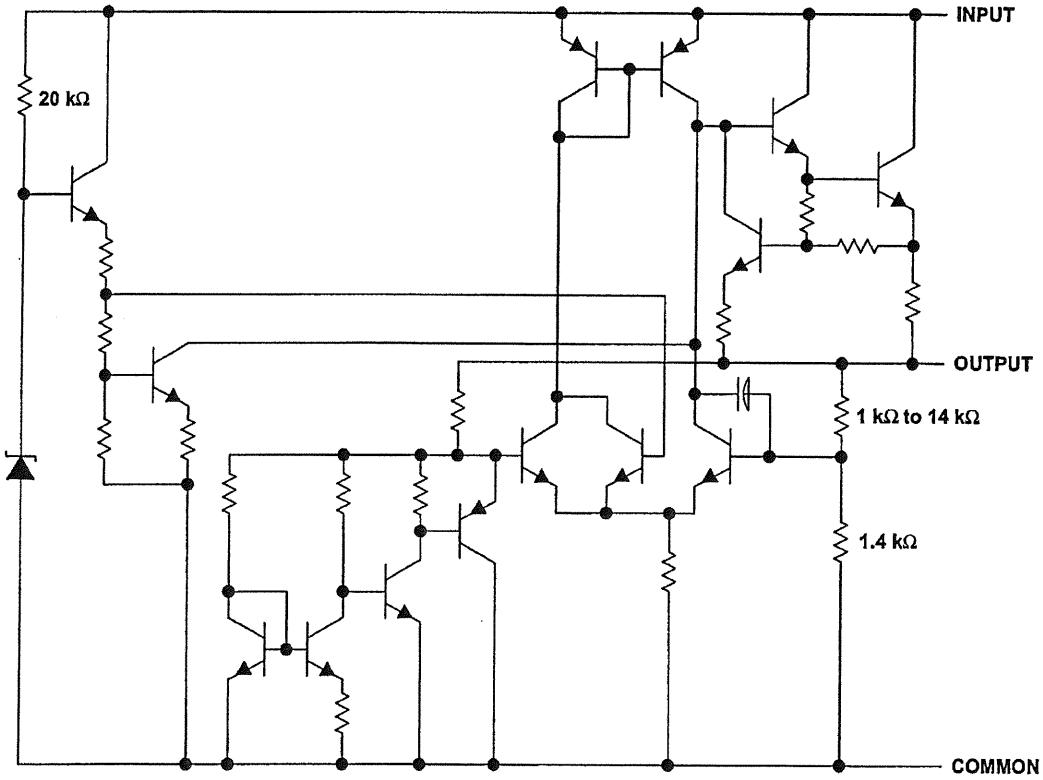

NOTE A: Resistor values shown are nominal.

absolute maximum ratings over virtual junction temperature range (unless otherwise noted)†

Input voltage, V_I: μA78L02AC, μA78L05C–μA78L09C, μA78L10AC ..... 30 V
μA78L12C, μA78L12AC, μA78L15C, μA78L15AC ..... 35 V
Package thermal impedance, θ_{JA} (see Notes 1 and 2): D package ..... 97°C/W
LP package ..... 156°C/W
PK package ..... 52°C/W
Virtual junction temperature, T_J ..... 150°C
Lead temperature 1,6 mm (1/16 inch) from case for 10 seconds ..... 260°C
Storage temperature range, T_{stg} ..... –65°C to 150°C

† Stresses beyond those listed under "absolute maximum ratings" may cause permanent damage to the device. These are stress ratings only, and functional operation of the device at these or any other conditions beyond those indicated under "recommended operating conditions" is not implied. Exposure to absolute-maximum-rated conditions for extended periods may affect device reliability.

NOTES: 1. Maximum power dissipation is a function of $T_J(max)$, θ_{JA}, and T_A. The maximum allowable power dissipation at any allowable ambient temperature is $P_D = (T_J(max) - T_A)/\theta_{JA}$. Operating at the absolute maximum T_J of 150°C can affect reliability. Due to variations in individual device electrical characteristics and thermal resistance, the built-in thermal-overload protection may be activated at power levels slightly above or below the rated dissipation.
2. The package thermal impedance is calculated in accordance with JESD 51-7.

recommended operating conditions

			MIN	MAX	UNIT
V_I	Input voltage	μA78L02AC	4.75	20	V
		μA78L05C, μA78L05AC	7	20	
		μA78L06C, μA78L06AC	8.5	20	
		μA78L08C, μA78L08AC	10.5	23	
		μA78L09C, μA78L09AC	11.5	24	
		μA78L10AC	12.5	25	
		μA78L12C, μA78L12AC	14.5	27	
		μA78L15C, μA78L15AC	17.5	30	
I_O	Output current			100	mA
T_J	Operating virtual junction temperature range	μA78LxxC and μA78LxxAC series	0	125	°C
		μA78L05AI	–40	125	

LM350

3.0 A, Adjustable Output, Positive Voltage Regulator

The LM350 is an adjustable three–terminal positive voltage regulator capable of supplying in excess of 3.0 A over an output voltage range of 1.2 V to 33 V. This voltage regulator is exceptionally easy to use and requires only two external resistors to set the output voltage. Further, it employs internal current limiting, thermal shutdown and safe area compensation, making it essentially blow–out proof.

The LM350 serves a wide variety of applications including local, on card regulation. This device also makes an especially simple adjustable switching regulator, a programmable output regulator, or by connecting a fixed resistor between the adjustment and output, the LM350 can be used as a precision current regulator.

Features

- Guaranteed 3.0 A Output Current
- Output Adjustable between 1.2 V and 33 V
- Load Regulation Typically 0.1%
- Line Regulation Typically 0.005%/V
- Internal Thermal Overload Protection
- Internal Short Circuit Current Limiting Constant with Temperature
- Output Transistor Safe Area Compensation
- Floating Operation for High Voltage Applications
- Standard 3–lead Transistor Package
- Eliminates Stocking Many Fixed Voltages
- Pb–Free Packages are Available*

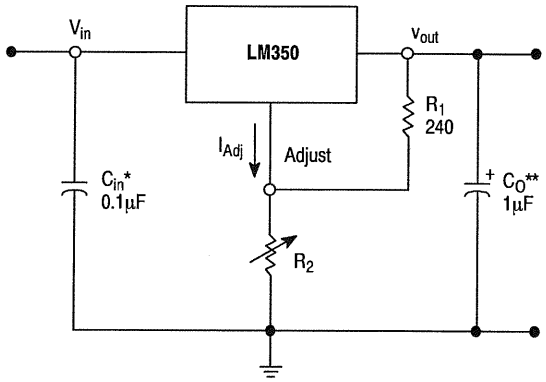

* = C_{in} is required if regulator is located an appreciable distance from power supply filter.
** = C_O is not needed for stability, however, it does improve transient response.

$$V_{out} = 1.25\ V\left(1 \le \frac{R_2}{R_1}\right) \le I_{Adj} R_2$$

Since I_{Adj} is controlled to less than 100 μA, the error associated with this term is negligible in most applications

Figure 1. Simplified Application

*For additional information on our Pb–Free strategy and soldering details, please download the ON Semiconductor Soldering and Mounting Techniques Reference Manual, SOLDERRM/D.

ON Semiconductor®

http://onsemi.com

THREE–TERMINAL ADJUSTABLE POSITIVE VOLTAGE REGULATOR

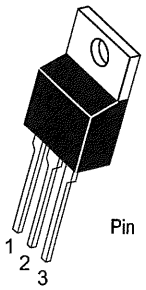

TO–220
T SUFFIX
PLASTIC PACKAGE
CASE 221A

Pin 1. Adjust
2. V_{out}
3. V_{in}

Heatsink surface is connected to Pin 2.

MARKING DIAGRAM

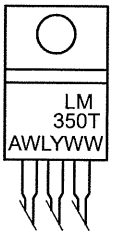

A = Assembly Location
WL = Wafer Lot
Y = Year
WW = Work Week

ORDERING INFORMATION

See detailed ordering and shipping information in the package dimensions section on page 3 of this data sheet.

© Semiconductor Components Industries, LLC, 2004

MAXIMUM RATINGS

Rating	Symbol	Value	Unit
Input−Output Voltage Differential	V_I-V_O	35	Vdc
Power Dissipation	P_D	Internally Limited	W
Operating Junction Temperature Range	T_J	−40 to +125	°C
Storage Temperature Range	T_{stg}	−65 to +150	°C
Soldering Lead Temperature (10 seconds)	T_{solder}	300	°C

Maximum ratings are those values beyond which device damage can occur. Maximum ratings applied to the device are individual stress limit values (not normal operating conditions) and are not valid simultaneously. If these limits are exceeded, device functional operation is not implied, damage may occur and reliability may be affected.

ELECTRICAL CHARACTERISTICS (V_I-V_O = 5.0 V; I_L = 1.5 A; $T_J = T_{low}$ to T_{high}; P_{max} [Note 1], unless otherwise noted.)

Characteristics	Figure	Symbol	Min	Typ	Max	Unit
Line Regulation (Note 2) T_A = 25°C, 3.0 V ≤ V_I-V_O ≤ 35 V	1	Reg_{line}	–	0.0005	0.03	%/V
Load Regulation (Note 2) T_A = 25°C, 10 mA ≤ I_I ≤ 3.0 A V_O ≤ 5.0 V V_O ≥ 5.0 V	2	Reg_{load}	 – –	 5.0 0.1	 25 0.5	 mV % V_O
Thermal Regulation, Pulse = 20 ms, (T_A = +25°C)		Reg_{therm}	–	0.002	–	% V_O/W
Adjustment Pin Current	3	I_{Adj}	–	50	100	µA
Adjustment Pin Current Change 3.0 V ≤ V_I-V_O ≤ 35 V 10 mA ≤ I_L ≤ 3.0 A, P_D ≤ P_{max}	1,2	ΔI_{Adj}	–	0.2	5.0	µA
Reference Voltage 3.0 V ≤ V_I-V_O ≤ 35 V 10 mA ≤ I_O ≤ 3.0 A, P_D ≤ P_{max}	3	V_{ref}	1.20	1.25	1.30	V
Line Regulation (Note 2) 3.0 V ≤ V_I-V_O ≤ 35 V	1	Reg_{line}	–	0.02	0.07	%/V
Load Regulation (Note 2) 10 mA ≤ I_L ≤ 3.0 A V_O ≤ 5.0 V V_O ≥ 5.0 V	2	Reg_{load}	 – –	 20 0.3	 70 1.5	 mV % V_O
Temperature Stability (T_{low} ≤ T_J ≤ T_{high})	3	T_S	–	1.0	–	% V_O
Minimum Load Current to Maintain Regulation (V_I-V_O = 35 V)	3	I_{Lmin}	–	3.5	10	mA
Maximum Output Current V_I-V_O ≤ 10 V, P_D ≤ P_{max} V_I-V_O = 30 V, P_D ≤ P_{max}, T_A = 25°C	3	I_{max}	 3.0 0.25	 4.5 1.0	 – –	A
RMS Noise, % of V_O T_A= 25°C, 10 Hz ≤ f ≤ 10 kHz		N	–	0.003	–	% V_O
Ripple Rejection, V_O = 10 V, f = 120 Hz (Note 3) Without C_{Adj} C_{Adj} = 10 µF	4	RR	 – 66	 65 80	 – –	dB
Long Term Stability, $T_J = T_{high}$ (Note 4) T_A= 25°C for Endpoint Measurements	3	S	–	0.3	1.0	%/1.0 k Hrs.
Thermal Resistance, Junction−to−Case Peak (Note 5) Average (Note 6)		$R_{\theta JC}$	 – –	 2.3 –	 – 1.5	°C/W

1. T_{low} to T_{high} = 0° to +125°C; P_{max} = 25 W for LM350T; T_{low} to T_{high} = −40° to +125°C; P_{max} = 25 W for LM350BT
2. Load and line regulation are specified at constant junction temperature. Changes in V_O due to heating effects must be taken into account separately. Pulse testing with low duty cycle is used.
3. C_{Adj}, when used, is connected between the adjustment pin and ground.
4. Since Long−Term Stability cannot be measured on each device before shipment, this specification is an engineering estimate of average stability from lot to lot.
5. Thermal Resistance evaluated measuring the hottest temperature on the die using an infrared scanner. This method of evaluation yields very accurate thermal resistance values which are conservative when compared to the other measurement techniques.
6. The average die temperature is used to derive the value of thermal resistance junction to case (average).

SPECIFICATIONS

Electrical Ratings	3A @ 120VAC, 28VDC; 1A @ 250VAC See Contact Options
Electrical Life	30,000 cycles typical
Contact Resistance	< 20 mΩ max initial @ 2-4VDC, 100mA
Dielectric Strength	1500Vrms min
Insulation Resistance	> 100MΩ min
Operating Temperature Storage Temperature	-40°C to 85°C -40°C to 85°C

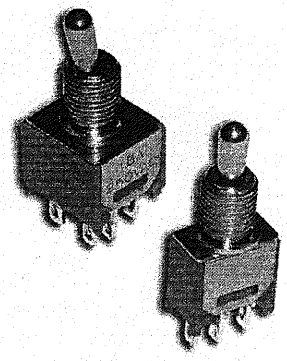

c UL us - E222871

MATERIALS ←RoHS COMPLIANT

Actuator	Brass, Chrome Plated
Housing	DAP – Diallyl Phthalate
Cover	Stainless Steel
Bushing	Brass, Nickel Plated
Contacts	Copper Alloy, Silver or Gold Plated
Terminals	Brass, Silver or Gold Plated

ORDERING INFORMATION

Series:	BNT	2	1	U	E1	C	Q	E

Series:
BNT

Number of Poles:
1 = SPDT
2 = DPDT

Switch Function:
1 = ON-NONE-ON
2 = ON-NONE-(ON)
3 = ON-OFF-ON
4 = (ON)-OFF-(ON) ** Only available in SPDT
5 = ON-OFF-(ON) ** Only available in SPDT
6 = ON-ON-ON ** See Three Way Wiring Section for Details

Actuator:
T = 5.33mm, Std, available on E/E1/F/F1 Bushings
U = 7.37mm, Std, available on E/E1/F/F1 Bushings
S = 9.40mm, Std, available on E/E1/F/F1 Bushings
X = 5.59mm, Std, available on G/G1/J/J1 Bushings
V = 10.41mm, Std, available on G/G1/J/J1 Bushings

Bushing:
E / E1 = 5.59mm, 10-48UNS / Non-Threaded, Flat
F / F1 = 5.59mm, 10-48UNS / Non-Threaded, Keyway
J / J1 = 6.60mm, ¼-40NS / Non-Threaded, Keyway
G / G1 = 7.87mm, ¼-40NS / Non-Threaded, Flat

Terminals:
B = Solder Lug
C = PC Pin
H = Horizontal Mount, Right Angle PC Pin; *HS = Snap-in*
V = Vertical Mount, Right Angle PC Pin; *VS = Snap-in*
A5 = PC Pin with Support Bracket; *A5S = Snap-in Support Bracket*

Contacts:
Q = Silver Plated
R = Gold Plated
G = Gold over Silver Plated

Epoxy Seal:
E = Epoxy Seal

www.citswitch.com
phone – 763.535.2339 fax – 763.535.2194

SWITCH FUNCTION

SPDT

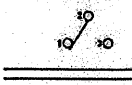

Function	Toggle Position		
1	ON	NONE	ON
2	ON	NONE	(ON)
3	ON	OFF	ON
4	(ON)	OFF	(ON)
5	ON	OFF	(ON)
Terminals	2-3	---	2-1

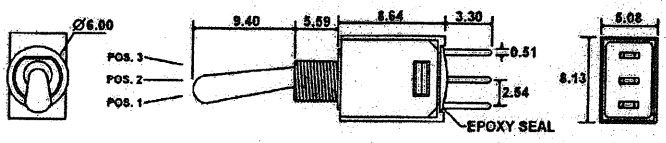

DPDT

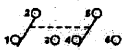

Function	Toggle Position		
1	ON	NONE	ON
2	ON	NONE	(ON)
3	ON	OFF	ON
Terminals	2-3 5-6	---	2-1 5-4
6	ON	ON	ON
Terminals	2-3 5-6	2-3 5-4	2-1 5-4

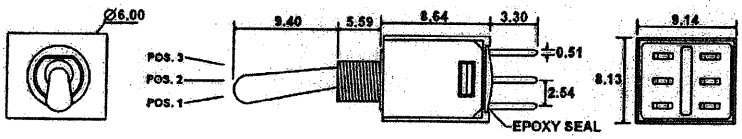

ACTUATOR OPTIONS

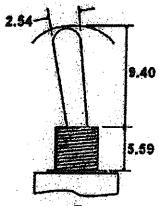

S

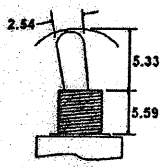

T

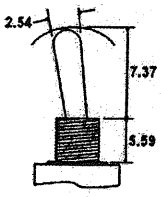

U

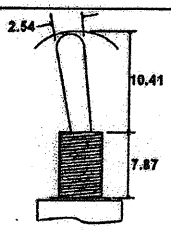

V

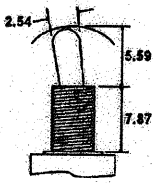

X

**Only available with E, E1, F, & F1 Bushings

**Only available with G, G1, J, & J1 Bushings

BUSHING OPTIONS

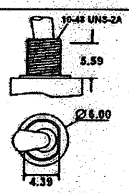

E

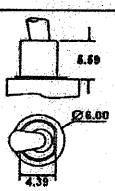

E1

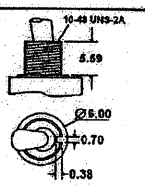

F

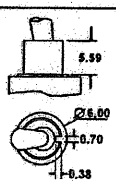

F1

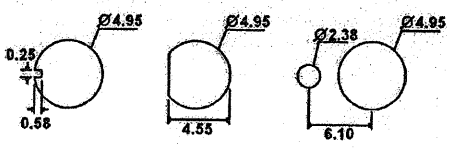

Panel Mounting – 10- 48

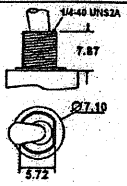

G

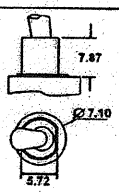

G1

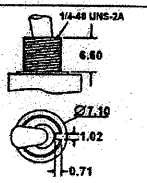

J

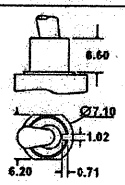

J1

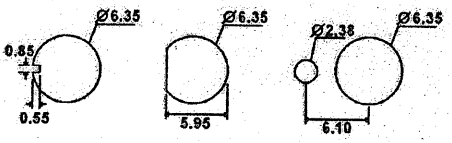

Panel Mounting – ¼-40

www.citswitch.com
phone – 763.535.2339 fax – 763.535.2194

SAMPLE PROJECT

Part 2

Electronics Technology

SkillsUSA
Champions at Work®

Contestant Handout

2015

Nida Corporation
300 John Rodes Blvd.
Melbourne, Florida 32904

SAMPLE PROJECT

Overview

Total Time - 60 min | Total Points - 100 | Overall Weight - 0%

Introduction

You will be scored on your ability to:

1. Read and follow instructions.
2. Answer questions correctly.
3. Perform an Operational Check.

Judges are **NOT** permitted to answer questions during the competition. Should you encounter a technical problem, you may request assistance by pressing the **"H"** key and then the **"ENTER"** key on the test console. All technical problems will be corrected by the Judge and no demerits will be assessed.

Judges **WILL** assess a 2-point demerit for each violation of the following. Demerit points will be used as a discriminating factor in breaking ties.

1. Unwarranted requests for assistance (2 points)
2. Identifying good equipment as faulty (2 points)
3. Failure to follow instructions (2 points)
4. Safety violations (2 points)
   - ✓ Wearing jewelry
   - ✓ Not wearing safety glasses
   - ✓ Improper use of soldering iron

Materials Required

Sample Project Contestant Handout Part 2
Skills07-1 PWM Switching Power Supply I Circuit Card
Skills07-2 PWM Switching Power Supply II Circuit Card
Skills07-3 Load Circuit Card
5 Pin Jumper Cable
Oscilloscope
Multimeter
Nida Screwdriver
Nida 130E Test Console
Miscellaneous Tools as Required

Copyright © 2015 by Nida Corporation

Procedure

Welcome to SkillsUSA. You have just begun a sample project that should help you understand both procedures and interactions required during the real competition. Read all instructions carefully and do not skip any steps. Let's begin Sample Project Part 2!

1. **READ!!!** Observe the display on the Nida 130E Test Console and ensure that it looks like the example shown in Figure 1. Verify that your contestant number replaces the **[--- xx ---]** shown in the example. The troubleshooting section is slightly different from the written test in that you are not allowed to recall or change a previously entered answer. You will, however, still be allowed to skip questions. Notice the word "Proceed" on the display. During the troubleshooting event, no malfunction (problem) is set until you answer "Y" to this question.

   At this point, perform the Operational Check on pages 13-14 in the Technical Manual and verify the operation of the PWM Switching Power Supply. When you have completed the Operational Check continue to step 2 in this handout and finish the remaining parts of this Sample Troubleshooting Project.

TROUBLESHOOTING
--- xx ---

Part 1
Proceed: ___

Figure 1

Copyright © 2015 by Nida Corporation

Procedure, continued

2. If you are satisfied that the PWM Switching Power Supply and Loads are functioning correctly, Enter **"Y"** at the **Proceed:** prompt. Observe the display on the Nida 130E Test Console and ensure that it looks like the example shown in Figure 2.

   Notice that the display is requesting your input regarding the current status of the PWM Power Supply circuitry. The question you must answer is, "Does the circuit Pass or Fail an Operational Check"?

   Observe that the Varying Load LEDs are NOT flashing and the voltage measured at TP15 is zero. Based on this basic information, you can answer the **Pass / Fail: ___** question by entering an **"F"** for fail, at the prompt.

```
TROUBLESHOOTING
--- xx ---

Part 1
Pass / Fail: ___
```

Figure 2

3. Now that you have identified that the circuit has Failed the Ops Check, you need to identify in which Block the fault has occurred. Use the schematics provided in the Technical Manual for this purpose. Monitor the voltage at TP5 and TP15. The same voltage should be present at both test points. Your readings indicate that no RAMP voltage exists between TP5 and TP15. The Block most likely to be the source of the failure is Block 3. Based on this basic information, you can answer the **Block #: ____** question by entering **"3"** at the prompt.

```
TROUBLESHOOTING
--- xx ---

Part 1
Block #: ___
```

Figure 3

Copyright © 2015 by Nida Corporation

Procedure, continued

4. Now that you have identified that the circuit failed and Block 3 is the most likely source of the problem, you need to enter a Reference # from the Malfunction Description table. Using the table provided and the basic information we have observed/measured, look at reference number 7. This malfunction says that R5 is open on Skills07-1. R5 is the only component between TP5 and TP15 and is located in Block 3. This is the most likely cause of the malfunction. You can answer the **Reference #: ____** question by entering "7" at the prompt.

```
TROUBLESHOOTING
--- xx ---

Part 1
Reference #: ___
```

Figure 4

** END OF SAMPLE PROJECT **

Copyright © 2015 by Nida Corporation

MALFUNCTION DESCRIPTION

Locate the **CIRCUIT CARD #** and associated **MALFUNCTION** that best describes the operation of your circuit. Enter the corresponding **REFERENCE #** on the Nida Test Console keypad. Malfunction descriptions may be used once, more than once, or not at all.

CIRCUIT CARD #	MALFUNCTION	REFERENCE #
Skills07-1	U2	1
Skills07-1	D3 open	2
Skills07-1	R10 open	3
Skills07-1	R8 shorted	4
Skills07-1	R9 open	5
Skills07-1	R8 open	6
Skills07-1	R5 Open	7
Skills07-2	C9 shorted	8
Skills07-2	U3A	9
Skills07-2	D9 shorted	10
Skills07-2	Q1 C-E short	11
Skills07-2	D9 open	12
Skills07-2	L1 open	13
Skills07-2	Q4 C-E short	14
Skills07-2	Q1 or Q2 B-E open	15
Skills07-3	R48 open	16
Skills07-3	U7	17
Skills07-3	C15 shorted	18
Skills07-3	K2 open	19
Skills07-3	IC1	20
Skills07-3	U6A	21
Skills07-3	D12 open	22

Copyright © 2015 by Nida Corporation

SOLDERING PROJECT

Electronics Technology

SkillsUSA
Champions at Work®

Contestant Handout

2015

Nida Corporation
300 S. John Rodes Boulevard
Melbourne, Florida 32904

SOLDERING PROJECT

Overview

Total Time - 90 min | Total Points - 200 | Overall Weight - 20%

Instructions

You will be scored on your ability to:

1. Read and follow instructions.
2. Interpret a component layout diagram.
3. Prepare components for soldering.
4. Solder and de-solder components to a printed circuit board.

Judges are NOT permitted to answer questions during the competition. Should you encounter a technical problem, you may request assistance by pressing the "**H**" key and then the "**ENTER**" key on the Nida Model 130E Test Console. All technical problems will be corrected by the Judge and no demerits will be assessed.

Judges **WILL** assess a 2 point demerit for each violation of the following. Demerit points will be used as a discriminating factor in breaking ties.

1. Unwarranted requests for assistance (2 points)
2. Identifying good equipment as faulty (2 points)
3. Failure to follow instructions (2 points)
4. Safety violations (2 points)
   - ✓ Wearing jewelry
   - ✓ Not wearing safety glasses
   - ✓ Improper use of soldering iron

Materials Required

Soldering Project Contestant Handout
Reference Manual (Data Sheets)
Blank Roll the Dice Circuit Board
Soldering Project Pre-Packaged Parts Kit
Nida Screwdriver
Multimeter
Oscilloscope
Solder Equipment
Miscellaneous Tools as Required

Copyright © 2015 by Nida Corporation

Procedure

1. **Log On**. Observe the display on the Nida Model 130E Test Console. Ensure that it looks like the example shown in Figure 1. Verify that your contestant number replaces the **[--- xx ---]** shown in the example.

```
SOLDERING PROJECT
--- xx ---

Part 1
Judge's Code: ____
```

Figure 1

2. **Verification.** Locate the pre-packaged parts kit (blue dot) provided for this project. Verify that it is complete and visibly serviceable using the "**Soldering Parts List**" provided on page 8 of this handout. If you determine that a component is missing or you have a surplus of components, press the "**H**" key and then the "**ENTER**" key, and a Judge will respond.

3. This project tests your ability to solder. The circuitry on the Nida Solder Project circuit board is a game that simulates the rolling of two dice. Upon completing the soldering portion of this project, you must demonstrate proper operation to one of the judges. **Read the Project Overview portion of the Reference Section before performing the final test.**

4. The separate Reference Manual and the Reference Section on the following pages are your only guides while you are constructing the soldering project. You will be scored on your ability to read and follow instructions, interpret a schematic and component layout diagram, prepare components for soldering, solder components to a printed circuit board, and de-solder components.

>>> Proceed to the "Reference Section" and Continue <<<

Copyright © 2015 by Nida Corporation

REFERENCE SECTION

PROJECT OVERVIEW

The soldering project is a pair of identical one-of-six random number generator circuits disguised as a Roll the Dice game. Your task is to construct the circuit from commonly used electronic components while following the Soldering Procedure and schematic diagrams provided. The operation of the circuit will be judged functional when all components have been properly soldered and the circuit functions in accordance with the Operational Check. The schematic is on page 9 of this manual.

As mentioned, the two circuits are identical and share no common parts except for portions of integrated circuit U1, a hex buffer IC. Each circuit uses three of the six inverting buffers contained in U1. Two of the inverting buffers and a Junction Field Effect Transistor (JFET) make up the oscillator circuit for each random generator circuit, and the third inverting buffer is used in the decade counter circuit of U2 or U3.

Other than power and ground, U2 and U3 require just two inputs to operate: a clock input at pin 14, and an active low enabling input at pin 13. When enabled, the counter in U2/U3 advances at the leading edge of each clock input pulse, causing the IC to advance the count by one from Q0 to Q5, illuminating the single corresponding LED for each output. Since just six of the ten counting positions are used, the counter resets to zero whenever the counter enables position seven (Q6), with the high output state at pin 5 coupled to pin 15, the IC Reset input.

Each random generator circuit operates at a fast speed whenever the Roll button S1 or S2 is depressed. The circuit can be powered using the +12 volt power supply internal to the Nida 130E trainer, or externally by a 9-volt battery.

>>> Begin Part 1 when ready <<<

Copyright © 2015 by Nida Corporation

SOLDERING PROCEDURE

Part 1

a. Locate the Roll the Dice circuit board.

b. Solder the six flanges and two turrets at the back of the circuit board as shown in Figure 2.

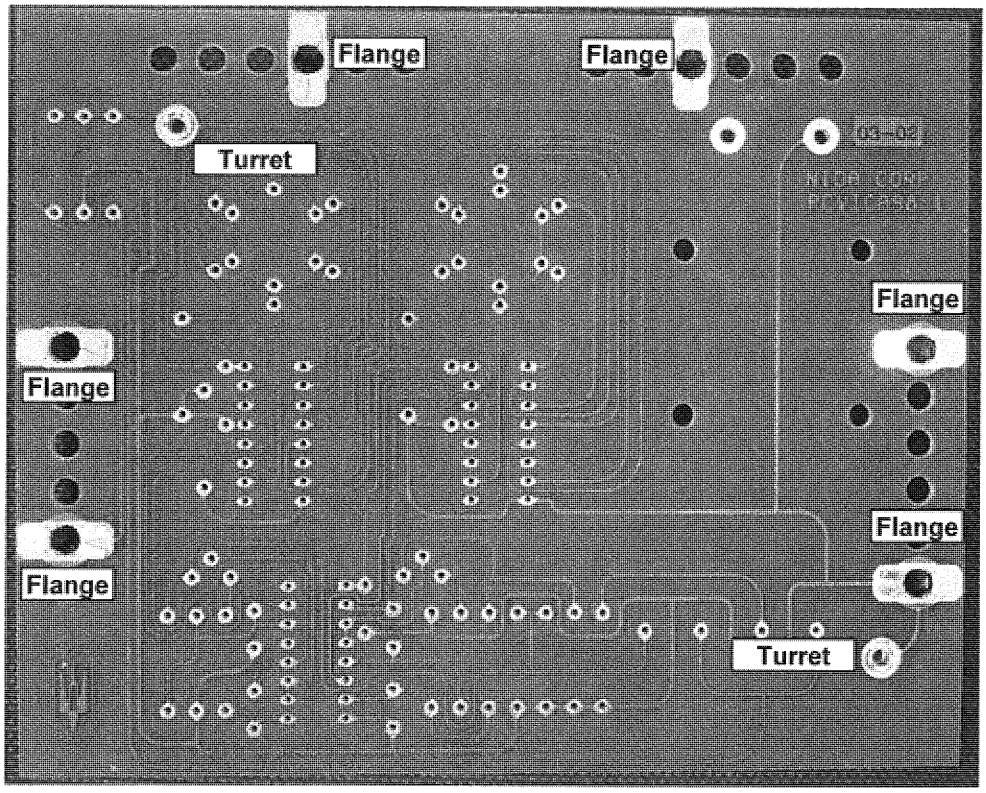

Figure 2

Copyright © 2015 by Nida Corporation

SOLDERING PROCEDURE

Part 1, continued

c. Install and solder the ½" precut jumper, the nine resistors, and the three diodes as shown in Figure 3. Observe polarity on the diodes and install the resistors so the color codes can be read from top to bottom when installed on the circuit board.

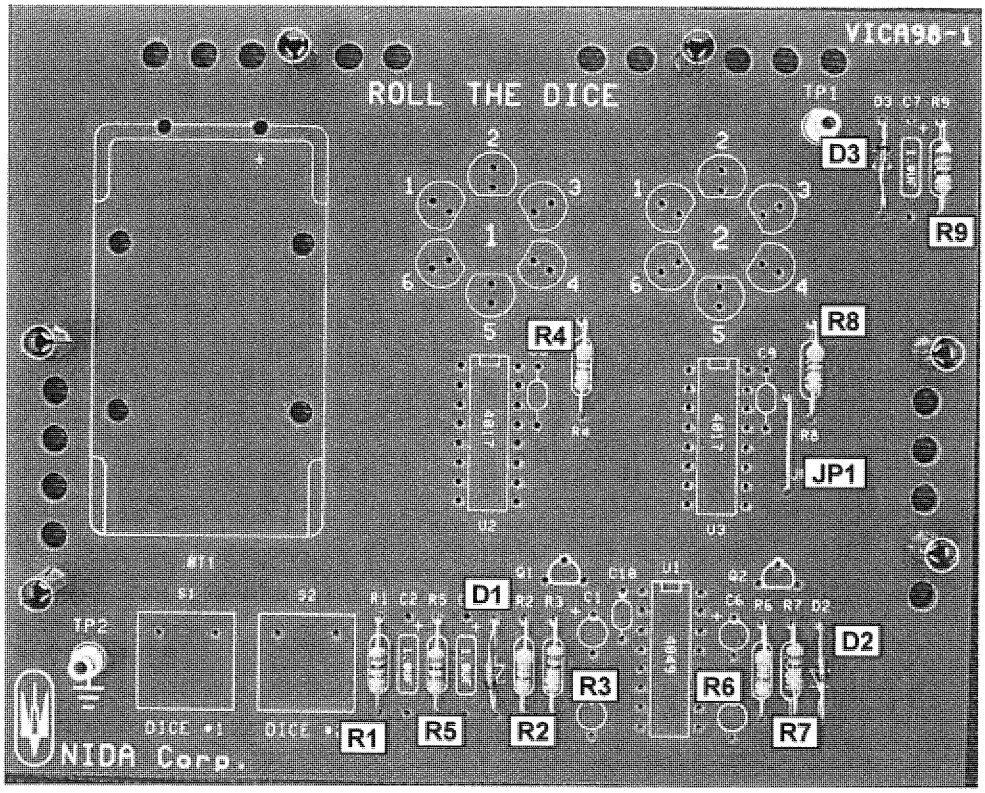

Figure 3

d. When you are satisfied with the solder connections and are ready for inspection, press the "**H**" key and then the "**ENTER**" key on the keypad to request your first verification check.

Copyright © 2015 by Nida Corporation

SOLDERING PROCEDURE

Part 2

a. Locate the necessary components from the parts kit, and solder the ten capacitors and the twelve LEDs to the printed circuit board. Capacitors should be installed with the label in a position so the value can be seen from the top of the circuit board if mounted horizontally or the left side of the circuit board if mounted vertically. Make sure to observe polarity as needed and trim the component leads to the proper length. Use Figure 4 for reference.

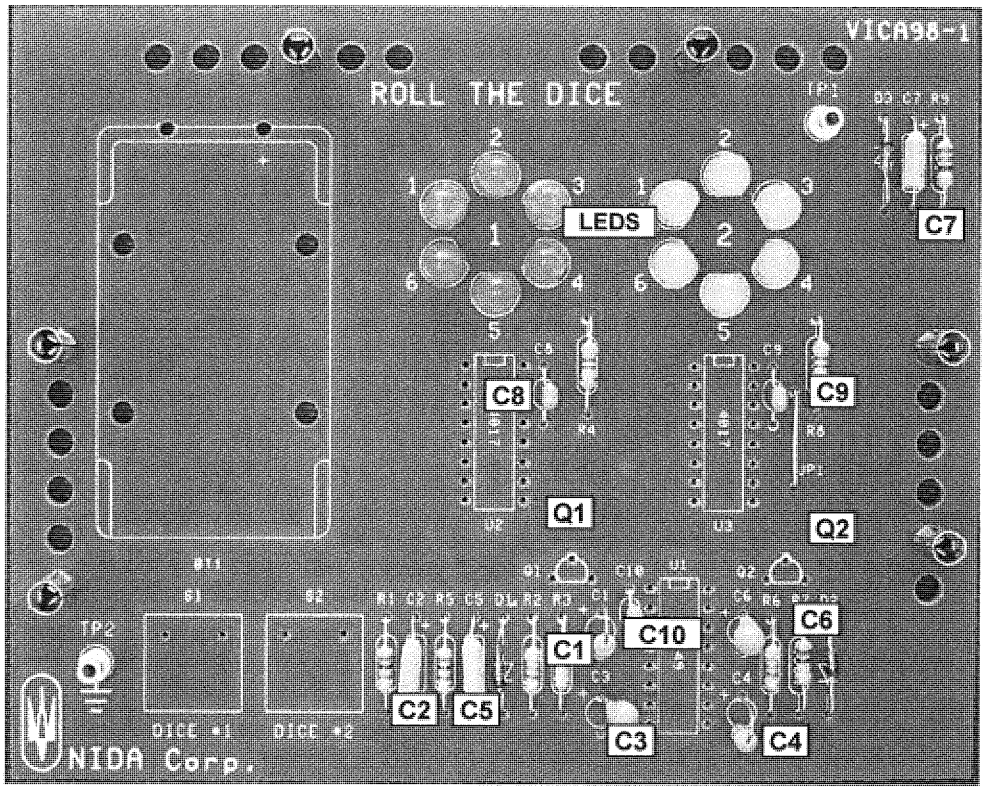

Figure 4

b. Locate and solder Q1 and Q2 to the printed circuit board. Q1 and Q2 should be approximately ¼ inch above the circuit board when completed. Make sure to observe polarity as needed and trim the component leads to the proper length.

c. When you are satisfied that your soldering thus far is ready for inspection, press the "**H**" key and then the "**ENTER**" key on the keypad to request your second verification check.

Copyright © 2015 by Nida Corporation

SOLDERING PROCEDURE

Part 3

a. Solder the IC sockets for U1, U2, and U3 to the circuit board. When completed, install the ICs. Observe proper pin alignment when soldering and installing.

b. Solder switches S1 and S2 to the circuit board. Make sure each switch is in alignment and flush with the circuit board after soldering.

c. Solder the 9-volt battery holder to the circuit board. Cut the excess leads from the back of the printed circuit board after installation.

d. Test your soldering project according to the OPERATIONAL CHECK below.

e. Perform any necessary troubleshooting and repairs to make the circuit operational.

f. When you are satisfied that your work is ready for inspection, press the "**H**" key and then the "**ENTER**" key on the keypad to request your third verification check.

OPERATIONAL CHECK

1. Carefully install the Roll the Dice board on the test console in the PC2 location.

2. Set the 130E test console DC power supply to +12 VDC.

3. Press the DC Power switch on the PC2 position. Verify the DC LED at the PC2 position is illuminated.

4. Test the circuit by depressing S1 and S2 and observing the LED outputs. Each press of a roll input button will cause the corresponding LED display to "spin" and then stop at a single LED.

Part 4

A Judges will provide special instructions for Part 4 when you reach this point.

Copyright © 2015 by Nida Corporation

SOLDERING PARTS LIST

PART ID	DESCRIPTION	QUANTITY
VICA98-1	NIDA ROLL THE DICE CIRCUIT BOARD	1
51010005	HOLDER, 9 VOLT BATTERY	1
21053350	CAPACITOR, TANTALUM, 1 MFD 35V (105K)	5
21063160	CAPACITOR, 10 MFD 16V (106)	2
21042500	CAPACITOR, 0.1 MFD 50V (104)	3
51020006	LED, GREEN SHORT, ROUND	6
51020007	LED, YELLOW SHORT, ROUND	6
00510073	SILICONE DIODE, 1N914	2
00550029	ZENER DIODE, 1N960B 9.1V	1
81150031	JUMPER, 0.500 X 0.250	1
04100004	J-FET, 2N5640	2
1206710005	RESISTOR, CARBON FILM, 1M 1/4W	2
1206447005	RESISTOR, CARBON FILM, 4.7K 1/4W	2
1206610005	RESISTOR, CARBON FILM, 100K 1/4W	2
1206347005	RESISTOR, CARBON FILM, 470Ω 1/4W	2
1206251005	RESISTOR, CARBON FILM, 51Ω 1/4W	1
41020030	PUSH BUTTON SWITCH, SPST MOMENTARY	2
05040047	4049 INVERTING HEX IC	1
05040143	4017 DECADE COUNTER IC	2
61000013	IC SOCKET, 16-PIN	3

Copyright © 2015 by Nida Corporation

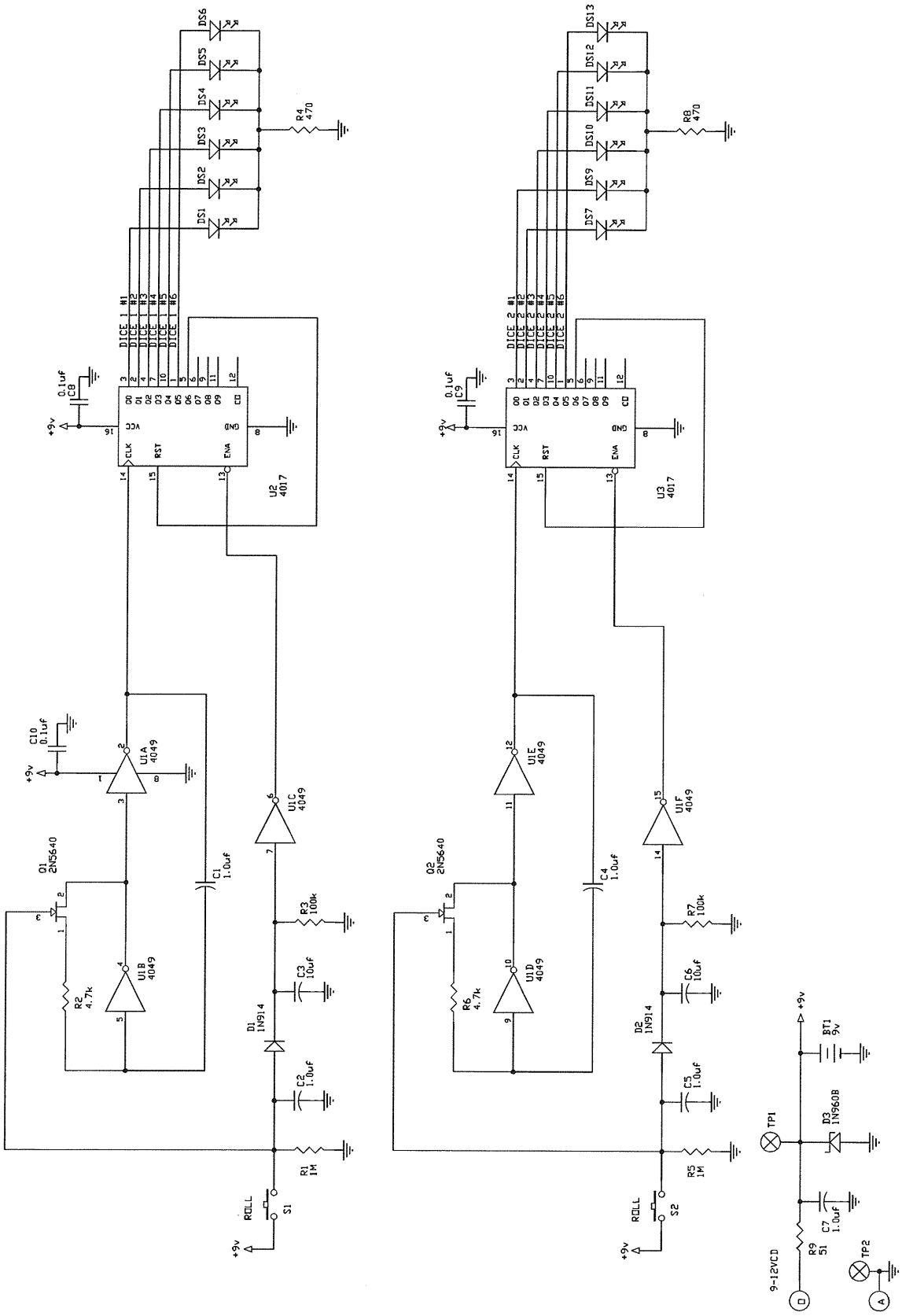

Roll the Dice Schematic

Copyright © 2015 by Nida Corporation

SOLDERING PROJECT

Electronics Technology

SkillsUSA
Champions at Work®

Engineering Change Notice

2015

Nida Corporation
300 S. John Rodes Boulevard
Melbourne, Florida 32904

ENGINEERING CHANGE NOTICE

Instructions

After releasing the "Roll the Dice Game", the engineering department discovered tolerance discrepancies between manufacturers IC's. As a result, an Engineering Change Notice has been issued for the "Roll the Dice Game". Perform the procedures identified in this hand-out and verify your changes with the Operational Check located on page 7 of the Contestant Handout.

Procedure

1. Locate a scrap component lead to use as a jumper. Cut a small length, just long enough to reach between pins 1 and 2 of Q1 as shown in Figure 1. This will connect the Source (pin 1) and the Drain (pin 2) together.

2. Solder the jumper into place while ensuring there are no unwanted shorts.

3. Now, cut another small length of wire, just long enough to reach between pins 1 and 2 of Q2 as shown in Figure 1. This will connect the Source (pin 1) and the Drain (pin 2) together.

4. Solder the jumper into place while ensuring there are no unwanted shorts.

5. Perform the Operational Check on page 7 of the Contestant Handout.

6. Perform any necessary troubleshooting and repairs to make the circuit board operational.

7. When you are satisfied that your work is ready for inspection, press the "**H**" key and then the "**ENTER**" key on the keypad to request your final verification check.

Copyright © 2015 by Nida Corporation

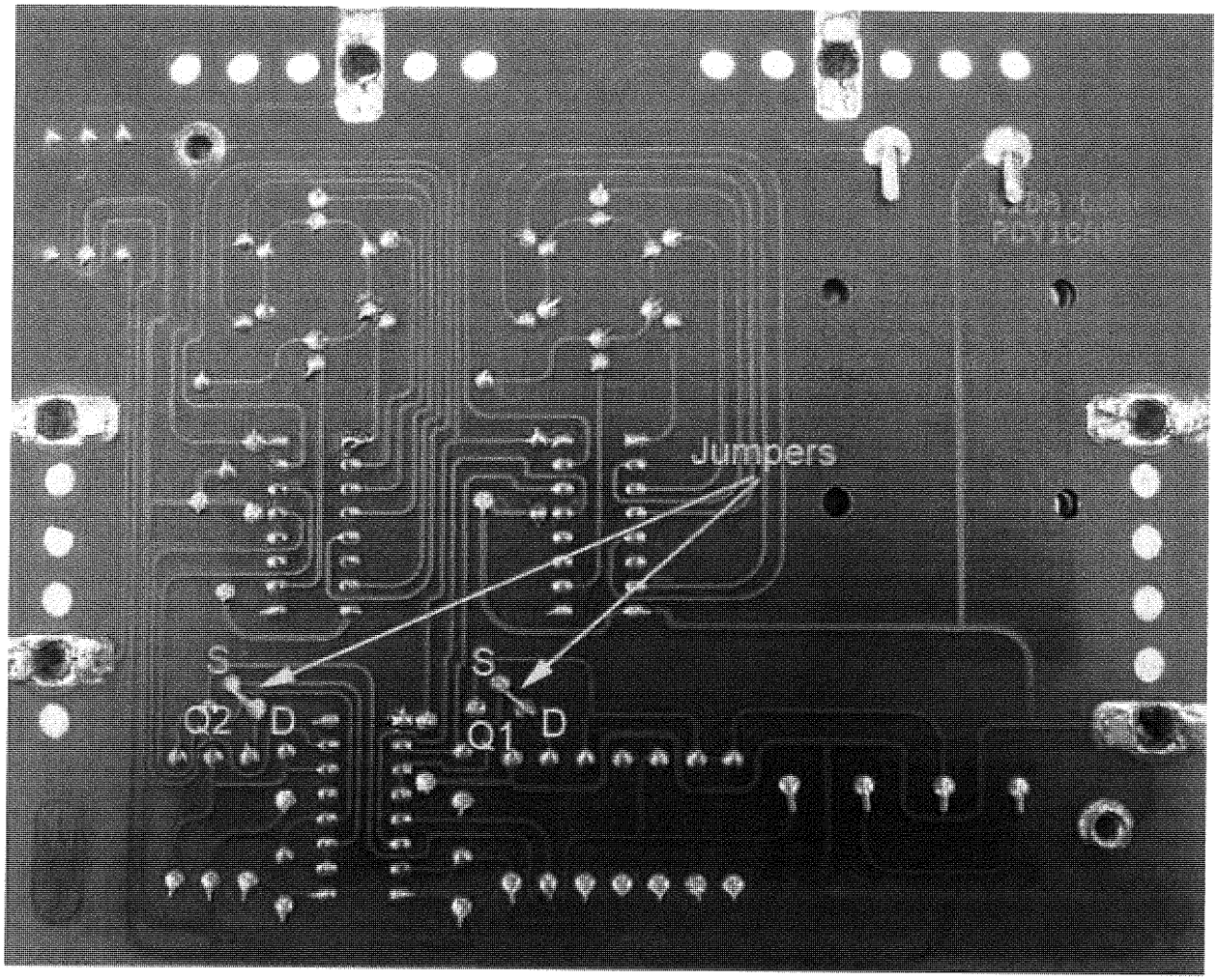

Figure 1

Copyright © 2015 by Nida Corporation

SOLDERING PROJECT

Electronics Technology

SkillsUSA
Champions at Work®

Judge's Scoring Guide

2015

Nida Corporation
300 S. John Rodes Boulevard
Melbourne, Florida 32904

SOLDERING PROJECT

Overview

Total Time - 90 min Overall Weight - 20%

The Soldering Project has four parts. The Contestant will solder components onto a soldering project board using components supplied in a pre-packaged design kit. Judges will score Contestants on their ability to read and follow instructions, interpret a component layout diagram, prepare components for soldering, and solder components to a printed circuit board.

General Guidelines

a. Judges may **NOT** provide technical assistance or give advice during the event.

b. Judges will ensure all materials have been issued prior to the start of the event.

c. Judges may assist with technical problems that interfere with the event.

d. Judges must respond immediately to a **HELP** request.

e. Demerit Codes

- Unwarranted requests for assistance J33
- Identifying good equipment as faulty J43
- Failure to follow instructions J53
- Safety violations J63
  - ✓ Wearing jewelry
  - ✓ Not wearing safety glasses
  - ✓ Improper use of soldering iron

Copyright - 2015 by Nida Corporation

Event Scoring

The contestant should verify the soldering kit components with the parts list in the Soldering Project Manual before moving on to Part 1. There should be no missing or extra parts in the soldering kit.

Enter " SS2 " on contestant trainer before performing the first Judging event.

Note: Throughout the competition, pay close attention to the solder condition. Should the solder connection(s) be cold, missing, or have too much solder, the score for the given sub-section should be zero (0).

Copyright - 2015 by Nida Corporation

0. Free Points (10 pts) **SS2**

PART 2

See Figure 2.

1. First Verification: Enter Judges Code - **JDG**

   a. Flanges are soldered – ..... **0 or 5**
      - All 6 flanges on the board are soldered ..... 5 points
      - One or more flanges are missed or poorly soldered ..... 0 points

   b. Turrets and the jumper are soldered – ..... **0 or 5**
      - Both turrets and the wire jumper on the board are soldered..... 5 points
      - Turrets or the jumper are missed or poorly soldered..... 0 points

   c. Resistors are soldered – ..... **0, 5, or 10**
      - All 9 resistors on the board are soldered ..... 5 points
      - Resistors are mounted with the color code starting at the top ..... 5 points

   d. Diodes are soldered – ..... **0, 5, or 10**
      - All 3 diodes on the board are soldered with correct polarity..... 5 points
      - The zener diode (slightly larger) is at D3 location ..... 5 points

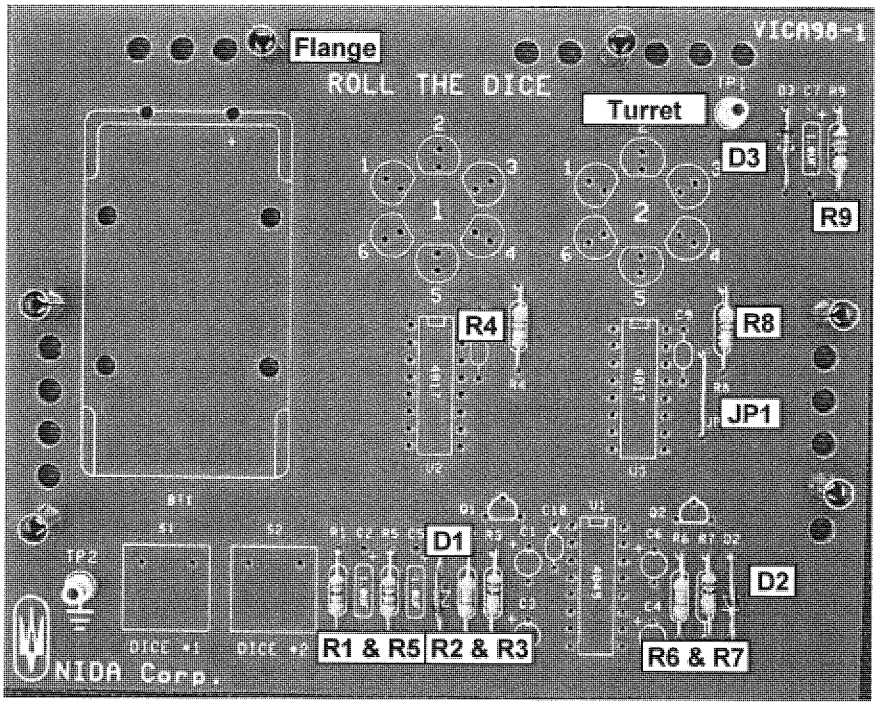

Figure 1. Flanges, Turrets, Jumpers, Resistors, Diodes

Copyright - 2015 by Nida Corporation

PART 2

See Figure 2.

2. Second Verification: Enter Judges Code - **JDG**

   a. Capacitors are soldered properly – Add all that apply ..... **0, 5, or 10**
      - Correct component values are installed ..... 5 points
      - Capacitors are installed with proper polarity ..... 5 points
        (C1, C2, C4, C5, & C7 should have beveled end pointed upward,
        C3 & C6 should have small "+" sign, C8, C9, & C10 are not polarized)

   b. DS1 through DS12 – Add all that apply ..... **0 to 12**
      - All 12 LED cathodes (flat side) are toward center of array..... 1 point each

   c. Q1 and Q2 ..... **0, 4, or 8**
      - Q1 and Q2 are installed correctly as per outline on card..... 4 points
      - Q1 and Q2 are installed approximately ¼" above card ..... 4 points

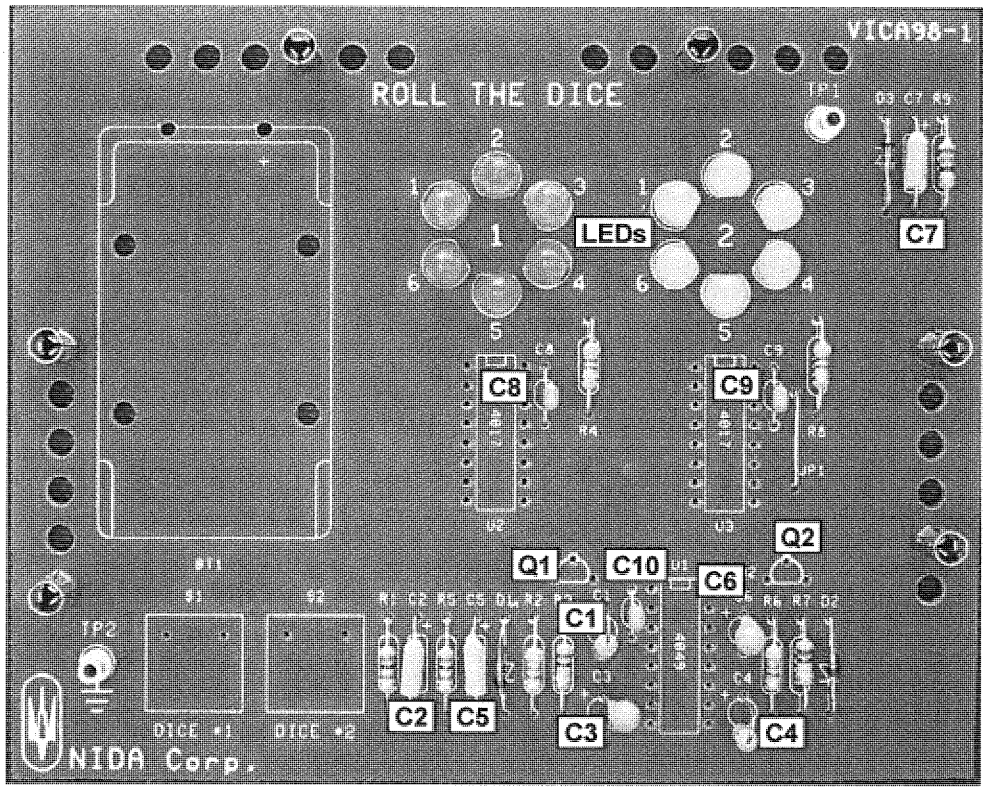

Figure 2. C1-C10, DS1-DS12, & Q1, Q2

Copyright - 2015 by Nida Corporation

PART 3

See Figure 3.

3. Third Verification: Enter Judges Code - **JDG**

   a. U1, U2, and U3 sockets are installed correctly – Add all that apply ..... **0, 5, 10, or 15**
      - All 3 sockets are flat to card and have correct pin 1 orientation . 5 points
      - No unsoldered, bridged or shorted connections on any socket ... 10 points

   b. ICs U1, U2, and U3 are installed correctly – Add all that apply.....**0, 5, 10, or 15**
      - Verify U1 type, pin orientation, and IC is secure in socket..... 5 points
      - Verify U2 type, pin orientation, and IC is secure in socket..... 5 points
      - Verify U3 type, pin orientation, and IC is secure in socket..... 5 points

   c. S1 and S2 are installed correctly – Add all that apply.....**0, 5, or 10**
      - S1 is installed flush to card and secure.....5 points
      - S2 is installed flush to card and secure.....5 points

   d. 9-Volt battery holder is correctly soldered .....**0 or 10**

   e. Circuit works as designed .....**0 or 25**

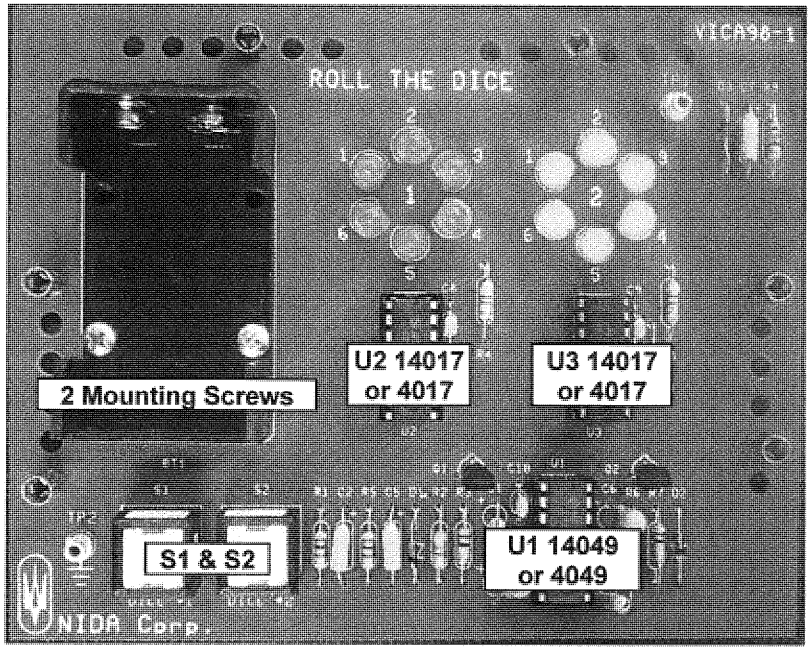

Figure 3. U1-U3, S1–S2, & Battery Holder

HAND THE CONTESTANT THE PART 4 ENGINEERING CHANGE NOTICE.PART 4

Copyright - 2015 by Nida Corporation

See Figure 4.

4. Fourth Verification: Enter Judges Code - **JDG**

   a. LAN has been cut and jumpers added – Add all that apply .....**0, 10, or 20**
      - Q1 Jumper installed and soldered.....10 points
      - Q2 Jumper installed and soldered.....10 points

   . Contestant demonstrates full circuit operation .....**35 points**

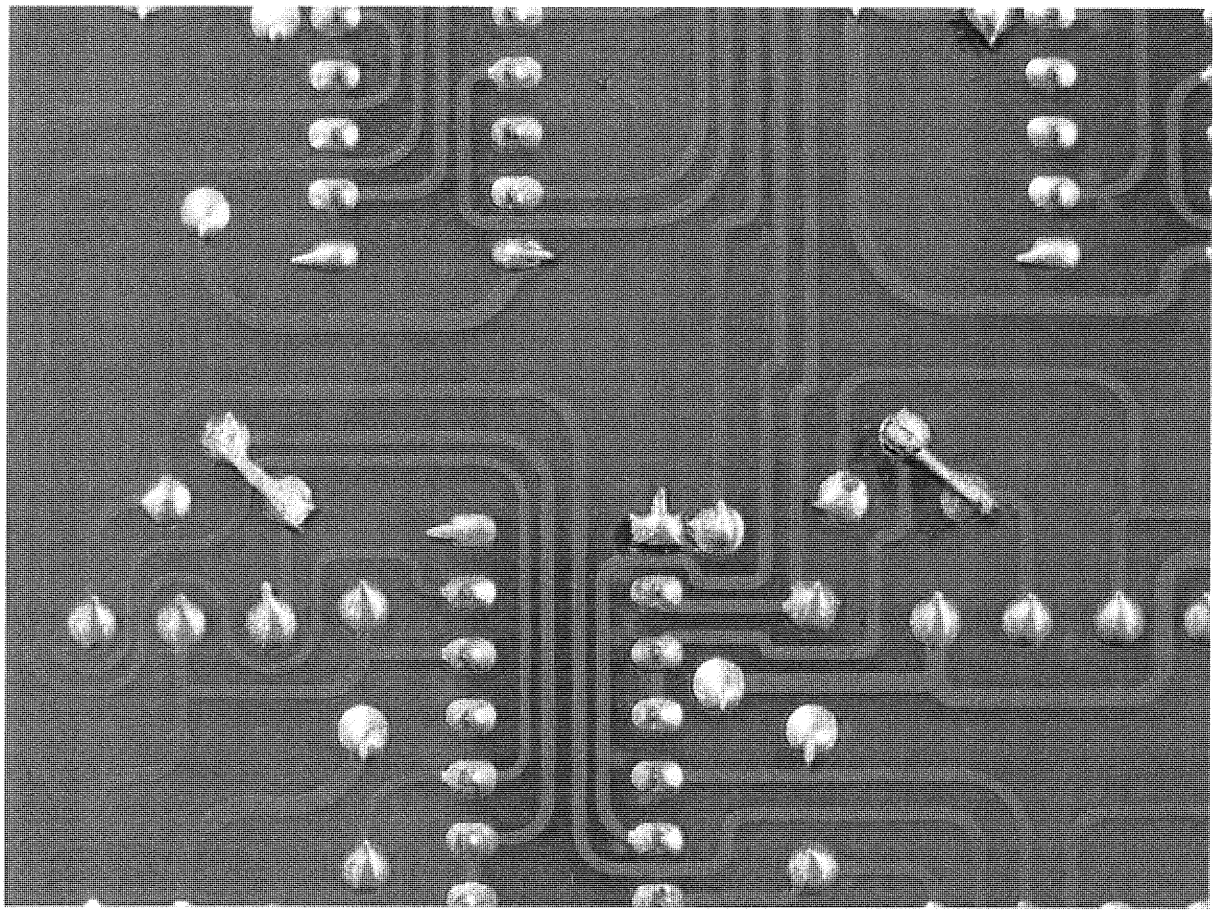

Figure 4. Final Assembly

**** END OF EVENT ****

Copyright - 2015 by Nida Corporation

TECHNICAL MANUAL

Electronics Technology

SkillsUSA
Champions at Work®

Contestant Handout

2015

Nida Corporation
300 John Rodes Blvd.
Melbourne, Florida 32904

Technical Manual

TABLE OF CONTENTS

Theory of Operation

General Description 1

Block Diagram Circuit Descriptions

PWM Switching Power Supply I 1

PWM Switching Power Supply II 2

Load 4

Schematic Diagram Circuit Descriptions

PWM Switching Power Supply I (Skills07-1) 5

PWM Switching Power Supply II (Skills07-2) 8

Load (Skills07-3) 11

Operational Check

1. System Setup 13
2. Setting the PWM Frequency, Threshold, and Output Voltage 14
3. Setting the Load Lower & Upper Limits and Clock Frequency 14
4. Final Setup Verification 14

Circuit Card Pictorials and Test Point Lists

PWM Switching Power Supply I (Skills07-1) 15

PWM Switching Power Supply II (Skills07-2) 16

Load (Skills07-3) 17

Schematics

PWM Switching Power Supply I (Skills07-1) 18

PWM Switching Power Supply II (Skills07-2) 19

Load (Skills07-3) 20

THEORY OF OPERATION

General Description – Switched-mode power supplies have the advantage over linear power supplies of requiring less power input for the amount of power output. Linear power supplies require an "overhead" voltage, meaning the power supply itself requires 1 to 3 volts of input more than the required regulated output just to maintain regulation. Should a high demand be placed on a linear supply and the demand pull the output voltage below the required voltage plus the overhead voltage, regulation is lost.

Switched-mode power supplies can be found in almost every electronic device with circuit demands greater than 2 amperes. Switched-mode supplies are more complicated, and therefore, more expensive to manufacture; but they have proven to be more reliable than their linear counterparts in high-current applications. Switched-mode power supplies operate at much higher frequencies than 60 Hz, which reduces the size of required filtering capacitors.

The switched-mode power supply used in the competition uses Pulse Width Modulation (PWM) to provide output voltage regulation. The PWM switching power supply resides on the Skills07-1 and Skills07-2 circuit cards. The power supply output is adjustable between 1.5 and 10 VDC.

The Skills07-3 circuit card is used to provide a load with varying current demands but operates only within a narrow span of DC voltage. The load placed on the power supply is constantly changing, and varies between 50 mA and 150 mA.

The following circuit descriptions are presented in both a simplified block diagram, or systems version, and a detailed schematic signal flow version down to the component level. It is recommended that you read and understand both presentations.

Block Diagram Circuit Descriptions – Each circuit card (PWM Switching Power Supply I, PWM Switching power Supply II, and Load) will be described as it relates to the circuits.

PWM Switching Power Supply I. The PWM Switching Power Supply I circuit card (Skills07-1) consists of the B1, B2, B3, and B4 blocks. See Figure 1 on the next page.

The PWM Switching Power Supply I circuit card provides several functions to the switching power supply. Each is totally separate from the others but all are required for the proper operation of the circuit. Following is an explanation of each of the sections:

Block B1 is the rectifier block. The AC input is converted to unregulated filtered DC voltage. The single output, a DC voltage between 15 and 19 volts, can be verified at test point TP1. This voltage is also present at the circuit card output plug, J1, on pin 1.

Block B2 contains an oscillator and buffer circuit. The block is powered by regulated 10 VDC from block B3, the amplitude control circuitry. The output of the circuit, a 10 volt square wave with an 80% duty cycle, is measured at TP8. When the circuit is properly set up, this waveform has a frequency of 100 kHz.

Copyright © 2015 by Nida Corporation

PWM Switching Power Supply I, continued

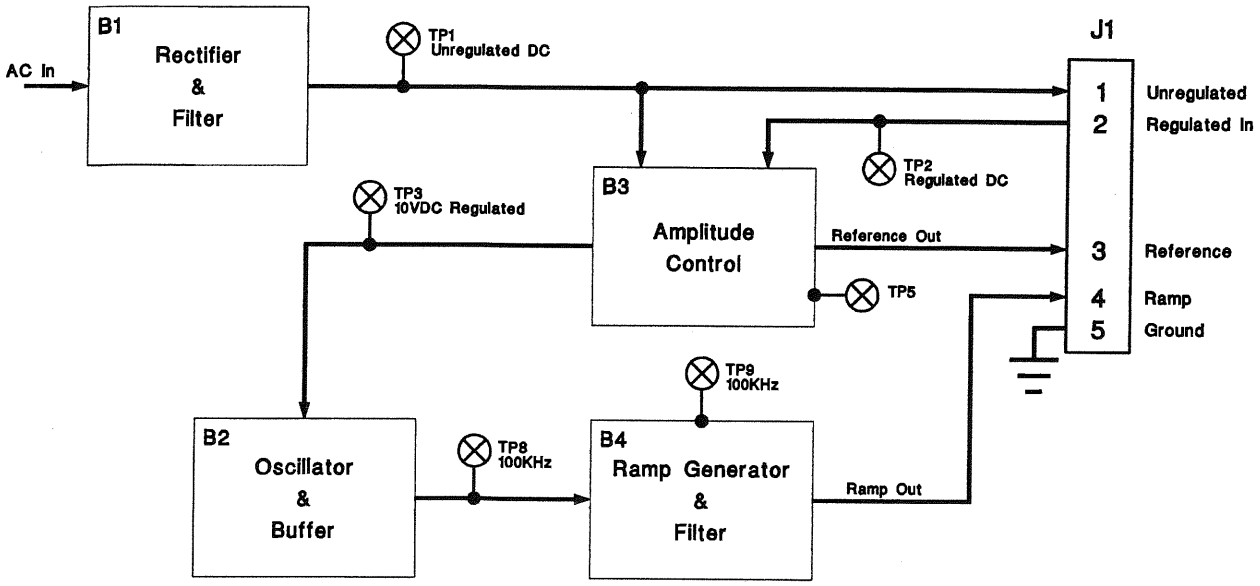

Figure 1. PWM Switching Power Supply I Block Diagram

Block B3, labeled Amplitude Control, contains an operational amplifier circuit configured as a differential amplifier. A sample of the regulated output voltage from the power supply enters the circuit card at J1 pin 2. This voltage is compared to a known internally-regulated DC voltage. The output of the differential amplifier, the correction signal for the switching power supply, labeled "Reference", is present at J1 pin 3. This output, a varying DC voltage of about 10 VDC, can be verified at TP5. A fixed 10 VDC output at TP3 powers block B2.

Block B4 contains a ramp generator circuit. The input to the circuit is the 100 kHz waveform output from block B2. This square wave input is converted to a ramp signal matching the duty cycle of the incoming waveform. This ramp signal can be viewed at TP9. A DC offset voltage of about 10 volts is added to the ramp signal, and the resulting composite signal, "Ramp", exits the circuit card at J1 pin 4.

PWM Switching Power Supply II. The PWM Switching Power Supply II circuit card (Skills07-2) consists of five blocks, B5 through B9. See Figure 2 on the next page.

The PWM switching power supply II circuit completes the switching power supply and has several functions. The five blocks making up the PWM switching power supply II circuit are B5 (PWM modulator & switch), B6 (current limiter), B7 (output filter), B8 (onboard load), and B9 (over-voltage protection). Following is an explanation of each block:

Copyright © 2015 by Nida Corporation

PWM Switching Power Supply II, continued

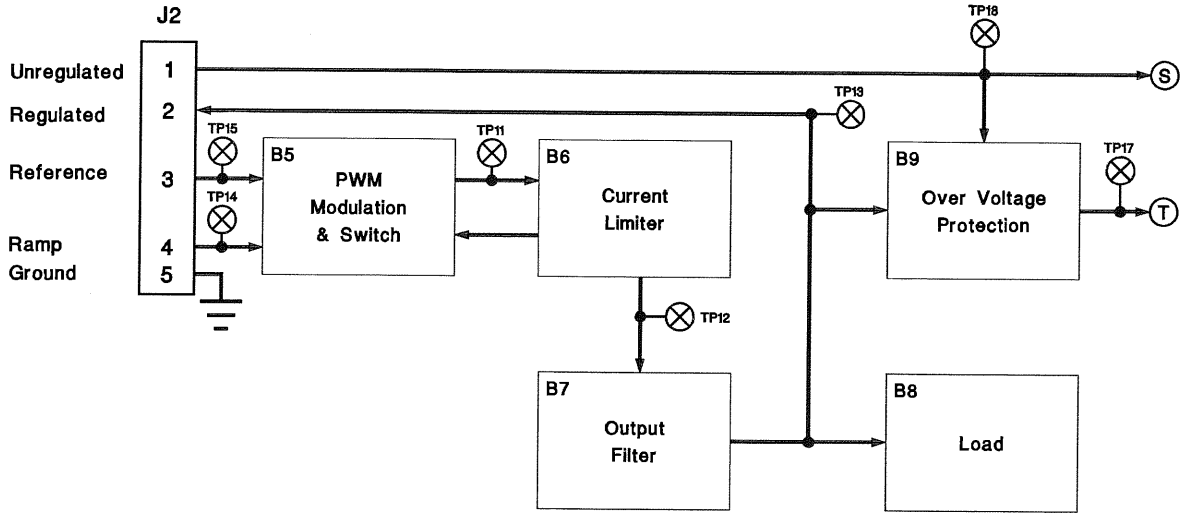

Figure 2. PWM Switching Power Supply II Block Diagram

Block B5 provides the pulse width modulation and switching. Regulation is provided by comparing the Reference and Ramp signals from the PWM switching power supply I circuit card.

TP14 allows the view of the composite Ramp signal and TP15 is used to verify the Reference signal. TP11 is the block 5 output, a 100 kHz square wave with slight rounding of the waveform at the top. The pulse width (duty cycle) will vary with the load. The pulse width will increase under higher current demand conditions.

Block B6, the current limiter, has a passive role in normal operation. Should the output loads fail in a way as to increase the current demand, the circuit activates and shuts down the power supply by disabling the switching signal in block B5. When the high current demand is removed, the current limiter again assumes the passive role as the power supply resumes normal operation.

TP12 is used to monitor the current limiter output. In normal use, the waveform at TP12 should be identical to the waveform at TP11, the block B5 output.

Block B7 is the output filter circuit. The input to the circuit is the switching square wave from block B6 common to TP12. The output of block B7 is the output for the switching power supply and can be measured at TP13. This output is applied to the over-voltage protection circuit and the loads; it also provides feedback for comparison in block B3 on the PWM Switching Power Supply I circuit card via J1 pin 4.

Block B8 has a voltage output indicator LED and a switched load.

Block B9 is an over-voltage protection circuit for the external load. Should the output of the switching power supply exceed a preset limit, the circuit trips, and the voltage to the external load is removed from the output terminal T. The output voltage can be measured at TP17.

Copyright © 2015 by Nida Corporation

Load. The Load circuit card (Skills07-3) consists of four blocks: B10, B11, B12, and B13. See Figure 3.

The purpose of the Load circuit card is to provide an external varying load for the PWM switching power supply.

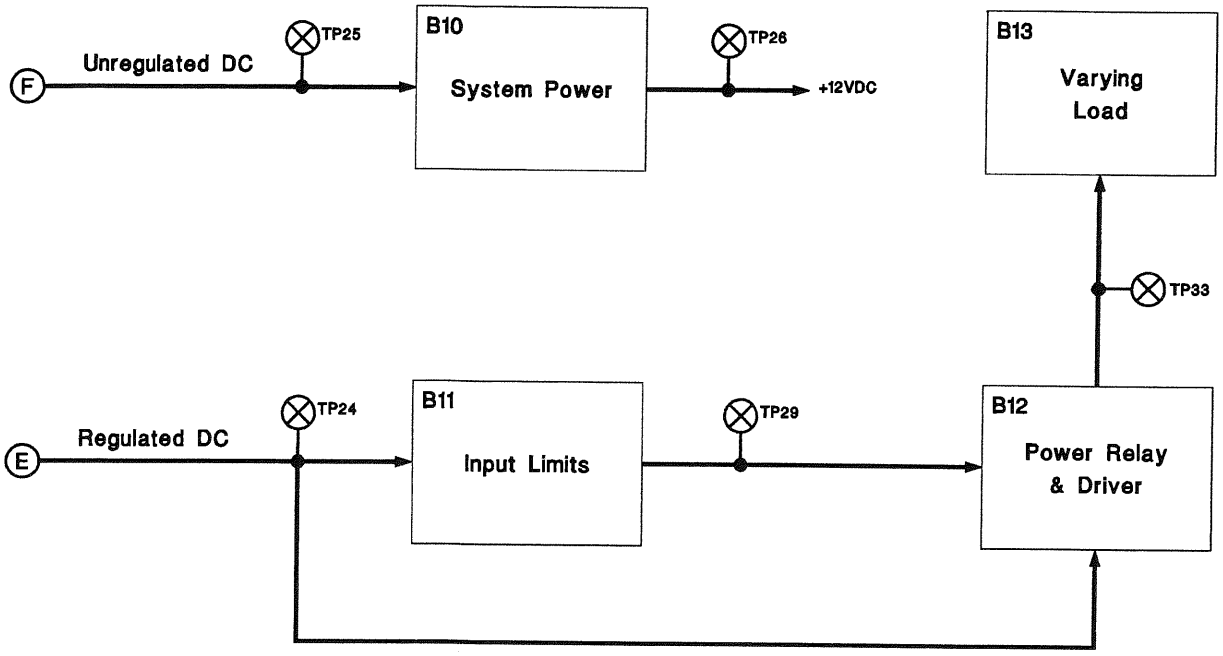

Figure 3. Load Block Diagram

Block B10 contains the system power supply. The protection and relay circuitry require a fixed operating voltage higher than the regulated output of the PWM switching power supply. Block B10 has a small low-current, single IC, linear power supply with a fixed +12 VDC output to power blocks B11 and B12.

The voltage source for block B10 is the unregulated DC voltage output from block B1, measured at TP25. The output for block B10 can be checked at TP26.

Block B11, Input Limits, monitors the regulated 8.5 VDC input voltage from block B9 on the PWM Switching Power Supply II circuit card. The input voltage can be verified at TP24. Should the regulated input voltage be above or below set limits, the circuitry will pull a normally-HIGH output at TP29 LOW, disabling the power relay and driver circuit in block B12.

Block B12 has the power relay and driver circuitry. A HIGH input at TP29 allows the circuitry to switch the PWM power supply regulated input to block B13, the Varying Load block. A LOW input at TP29 causes the circuitry to shut down, removing the power to block B13.

Copyright © 2015 by Nida Corporation

Load, continued

Block B13 contains the varying load for the PWM switching power supply. Eighteen LEDs, arranged in 3 groups of 6 LEDs each, are turned on and off at different speeds. This causes the load to vary constantly. When regulated voltage is present at TP33, the circuit should be operating with the LEDs flashing at different rates.

Schematic Diagram Circuit Descriptions – Schematic diagrams provide the greatest detail for circuit analysis and troubleshooting; they also give component values and identification numbers. The parts location pictorial and test point list for each circuit card are located after the Operational Check. The schematic diagrams are at the end of this document.

PWM Switching Power Supply I (Skills07-1)

The PWM Switching Power Supply I circuit card makes up one-half the overall pulse width modulated (PWM) switching power supply. There are four different blocks on the circuit card. Each block on the circuit operates independently but all are required for the proper operation of the power supply.

Two separate 60 Hz AC voltages 180° out of phase enter the circuit card in block B1 at pins B, C, G, and H. Pins C and G are grounded and provide ground return for the B and H inputs. Diodes D1 and D2 make up a full-wave bridge, converting the AC inputs to DC voltage. When S1 is in the ON position, the DC voltage is applied to C1, a 1,000 μF electrolytic capacitor, which filters out most of the AC ripple from the DC voltage.

The DC voltage at this point is unregulated, and can be verified at test point TP1. The voltage will measure between 15 and 19 VDC. The AC ripple at the top of the DC voltage can be as high as 1 Vpp, or about 1/3rd volt RMS. DS1 is a power indicator.

The unregulated DC is applied to blocks B3 and B4 on the PWM Switching Power Supply I circuit card; it also powers other blocks on the PWM Switching Power Supply II and Load circuit cards via plug J1 terminal 1.

An oscillator in block B2 made up of U1E and U1F develops a square wave digital signal with a tapered trailing edge. The waveform can be viewed at TP7, will be 10 Vpp, and will vary in frequency between 80 kHz and approximately 150 kHz with the adjustment of R11, the Frequency control. The oscilloscope probe may load the circuit in the x1 setting; it is best to use the x10 setting on the oscilloscope probe.

During normal operation, R11 is set to produce a 100 kHz waveform. 100 kHz translates to a waveform of 10 μs duration, and it can be verified by setting the oscilloscope Time/Div control to the 1 μs position. The waveform should extend completely across the oscilloscope display when the frequency is set properly.

Copyright © 2015 by Nida Corporation

PWM Switching Power Supply I (Skills07-1), continued

The output of the U1E / U1F oscillator is buffered in two stages: first by U1A, and then by U1B, U1C, and U1D in parallel. The resultant waveform is an almost perfect square wave with an 80% duty cycle. The waveform can be viewed at TP8. See Figure 4 for a sample. The sample in Figure 4 can be duplicated by setting the oscilloscope Time/Div control to 2 μs.

Because the supply voltage can affect the output of an RC oscillator circuit, block B2 receives a regulated 10 VDC supply voltage from block B3. Components C5, R10, R11, and D5 make up the RC timing circuit.

Block B3 contains U2, an operational amplifier set up in the differential mode that is used to compare the regulated output of the PWM switching power supply to a known voltage source. A difference output signal, termed "Reference", is developed at the output of U2 at pin 6. This signal is used as a correction signal for the power supply. The Reference signal, which can be viewed at TP5, departs the circuit card at J1 terminal 3.

The PWM Switching Power Supply sample output voltage enters the circuit card at J1 terminal 2 and can be measured at TP2. The voltage enters U2 at pin 2, the negative input to the op-amp, through R3. The configuration of R3 and R6, the feedback resistor, sets the gain of the op-amp at 10.

The fixed input to U2 is derived from the unregulated DC voltage at TP1. A voltage divider and regulator circuit consisting of R2, R4, and D3, a zener diode, drops and maintains the voltage at TP3 to 10 VDC. R4, a 5 kΩ variable resistor, sets the fixed voltage level to pin 3, the positive input to U2. The fixed 10 VDC at TP3 is applied to block B2 as the oscillator and buffer power source.

U2 compares the voltages at pins 2 and 3, the negative and positive inputs, and develops the difference signal as the Reference output signal. In normal working conditions when properly set, the Reference signal at TP5 is 10.5 to 11.5 VDC with a minor ripple at the top. The ripple is caused by the unregulated DC ripple and voltage correction changes made by U2.

The inputs to U2 can be verified at TP4, common to the positive input, and TP6, which is common to the negative input. When operating correctly, these voltages should be equal and just slightly higher than the regulated output of 8.5 VDC at 8.6 to 9 VDC.

Variations in the measured voltages at TP4 and TP6 are due to component tolerances, but they should measure with the multimeter to be equal in voltage. The voltage at TP4 is fixed, and the sample voltage at TP6 is adjusted at a 100 kHz rate by the power supply circuitry to be equal to the reference voltage at TP4.

Block B4 contains a simple ramp circuit consisting of an RC timing circuit, R8 and C3. R8, a 1 kΩ resistor, and C3, a 0.01 μF capacitor, make up a 10 μs (100 kHz) timing circuit. As the 80% duty-cycle square wave input from block B2 goes HIGH, C3 begins charging through R8.

Copyright © 2015 by Nida Corporation

PWM Switching Power Supply I (Skills07-1), continued

The charging of C3 through R8 causes the output signal at TP9 to form a voltage ramp during the HIGH portion of the square wave input. Since the input waveform does not have a 100% duty cycle, the ramp never reaches the full potential of the square wave; it cuts off when the square wave goes LOW at the 80% charged mark.

C3 has charged to 7 to 8 volts the instant the incoming square wave goes LOW. This forward biases D4, causing a quick discharge of C3 through D4, and a sharp drop LOW in the ramp waveform. C3 discharges down to the point where D4 is no longer forward biased, about 0.7 VDC. When the incoming square wave goes HIGH, the process starts over again and continues at the rate of 100 kHz. Figure 4 compares the original square wave at TP8 to the ramp signal at TP9.

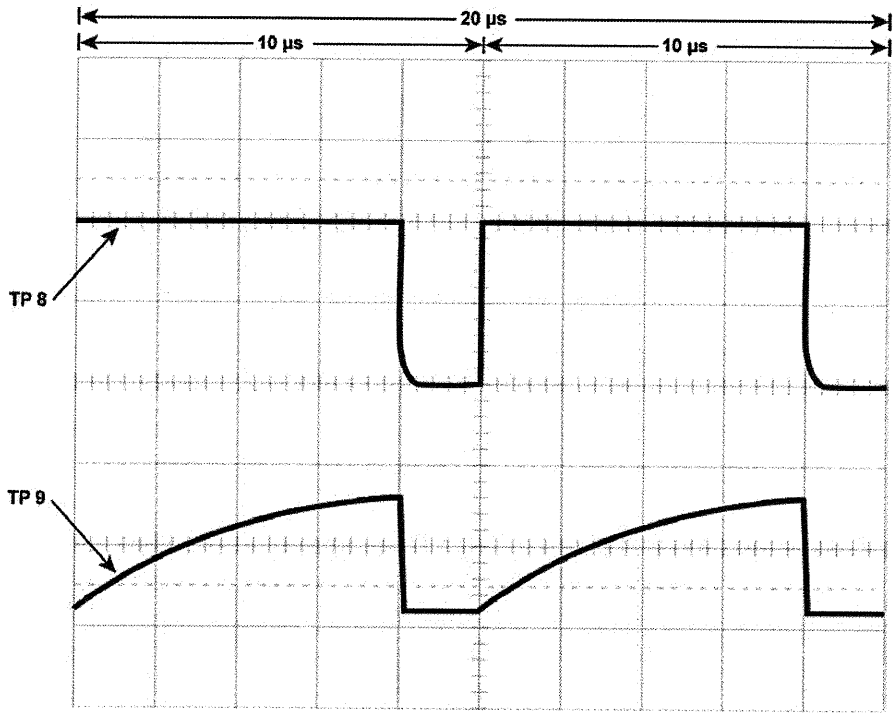

Figure 4

The unregulated DC voltage is used through R7 to provide a DC offset voltage to the ramp waveform signal. R9 and C4 comprise a low pass filter to remove high frequency noise. The resulting composite signal is the Ramp signal. The Ramp signal exits the circuit card at J1 terminal 4. See Figure 5 for a view of the Ramp signal.

J1 has three outgoing voltages or signals: the unregulated DC voltage at terminal 1, the Reference signal at terminal 3, and the Ramp signal at terminal 4. There is one incoming voltage on J1 terminal 2: the feedback DC voltage from the output filter circuit in block B7 on the PWM Switching Power Supply II circuit card. Terminal 5 of plug J1 is ground.

Copyright © 2015 by Nida Corporation

PWM Switching Power Supply II (Skills07-2)

The Reference signal from J2 terminal 3 and the 100 kHz Ramp signal from J2 terminal 2 are applied to U3A in block B5. The Reference signal, a changing DC voltage, can be viewed at TP15. The Ramp signal is available at TP14. U3A is one-half an LM393, a voltage comparator, and is powered from the unregulated DC voltage at J2 terminal 5.

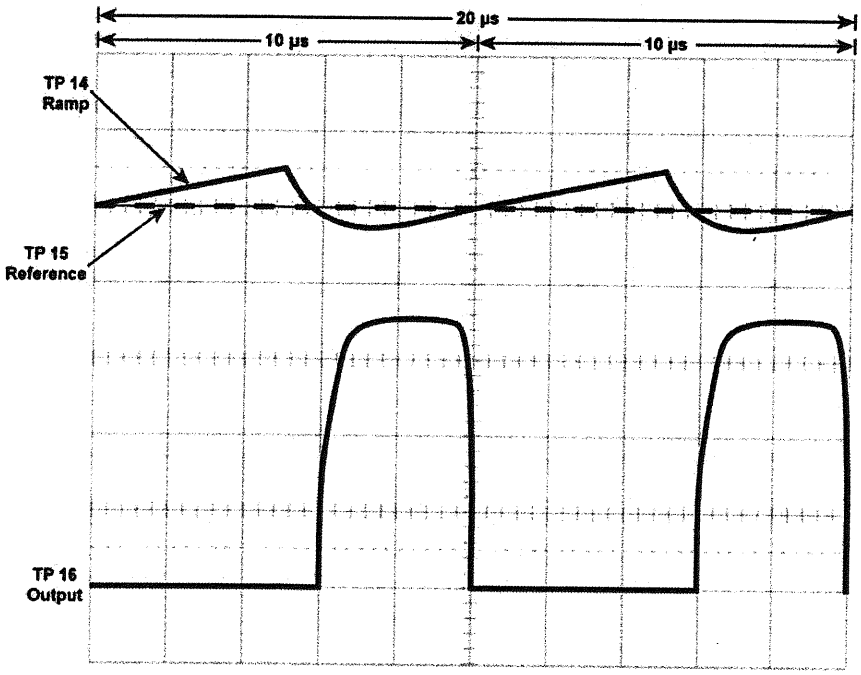

Figure 5

See Figure 5, the timing chart for U3A. U3A compares the voltage levels of the Reference signal at the positive input, pin 3, and the Ramp signal at the negative input, pin 2. As long as the Ramp signal is equal to or greater than the Reference signal, the output of U3A at TP16 remains LOW. However, when the Ramp signal is less than the Reference signal, the output of U3A goes HIGH.

The Ramp signal is very static and does not change. The Reference signal, a DC voltage, is developed from U2, the op-amp in block B3. The reference signal changes with the overall power supply output voltage in a reciprocal fashion.

If the power supply output voltage decreases, the reference voltage increases. If the power supply output voltage increases, the reference voltage decreases. The Ramp and Reference signal levels are constantly compared by U3A.

If the output current should rise, causing the output voltage to reduce, the Reference signal is increased, causing more of the Ramp signal to be below the Reference line. This increases the duty cycle of the output waveform, causing the output signal to be HIGH for more time during the 10 µs cycle.

Copyright © 2015 by Nida Corporation

PWM Switching Power Supply II (Skills07-2), continued

Likewise, should the output current demand drop, causing the voltage to increase, the Reference signal reduces, and less of the Ramp signal is below the Reference level. This reduces the duty cycle of the output at TP16. R17 provides negative feedback to prevent the comparator from going into oscillations caused by stray capacitance.

The correction of the output voltage occurs at the ramp frequency of 100 kHz, or once every 10 µs. Small correctional changes in the Reference level and the output waveform duty cycle can be noted as the load conditions change.

The output at TP16 is applied to the base of Q2. Q1 and Q2 are arranged in a Darlington Pair. A Darlington Pair consists of two transistors in tandem arranged so the current amplified by the first transistor (Q2) is further amplified by the second transistor (Q1). The Darlington Pair configuration offers higher current switching than a single device.

The output of the Q1/Q2 pair is the emitter of Q1, where a series of positive pulses at 100 kHz can be found. The waveform, viewed at TP11, follows the timing of the waveform at TP16.

The pulse width (duty cycle) of the waveform at TP11 will vary based on the current demand, longer during high current demands, and shorter when less output current is required. The waveform will have a tapered trailing edge under low current demand conditions. The peak voltage will be at the unregulated DC voltage level.

The output of Q1 flows through R12, a 1.5Ω, 3W resistor. TP11 is common to one side of R12; TP12 is common to the other. All the output current from the power supply flows through R12.

The power supply output current can be calculated by measuring the voltage drop across R12, and then dividing the voltage drop by 1.5Ω, the R12 value. The calculated answer will be the output current, usually 50 to 150 mA in normal operation.

Across R12 is Q3, the current limiting transistor. The base of Q3, at the TP11 side of R12, will be more positive than TP12, common to the emitter due to the voltage drop of R12. The voltage drop, and the voltages at Q3's base and emitter junction, will increase or decrease with the current demanded by the load.

Should the voltage drop across R12 increase to 0.6 VDC, the load is pulling too much current. At this point Q3 becomes forward biased and conducts. When Q3 conducts, the collector is pulled down to the emitter voltage, which forward biases D7. This also pulls the output of U3A LOW, disabling the switching power supply until the high load is removed, reducing the R12 voltage drop and preventing Q3 from conducting.

Copyright © 2015 by Nida Corporation

PWM Switching Power Supply II (Skills07-2), continued

The large circular device dominating the PWM Switching Power Supply II circuit card is inductor L1. L1 and C7 make up a low-pass filter arrangement, which filters the 100 kHz output from Q1 into steady DC voltage. The frequency of the switching power supply, 100 kHz, allows the relative small size for C7. The DC voltage at TP13, the power supply output, is 8.5 VDC for this application but is adjustable between 1.5 and 10 VDC using R4 in block B3.

Block B8 contains a visual indicator for power supply output, DS2. R14 provides current limiting for DS2, holding the current flow through DS2 down to about 15 mA. R15, switched on by S2, adds a load to the power supply if no external load is applied; or it can be used to provide additional load with an external load. DS3 illuminates when S2 is closed and R15 is added as a load.

An over-voltage protection circuit is in block B9. Should the output voltage exceed set limits, the circuit activates, removing the switching power supply output from the external load. The power supply output voltage leaves the circuit card at terminal T and can be measured at TP17.

The over-voltage protection circuit is powered by the unregulated DC voltage source at TP18. Operating like U3A in block B5, another voltage comparator, U4B in block B9 compares a known voltage to a sample voltage to determine if the sample voltage is above the set limit.

The known voltage is also derived from the unregulated DV voltage, through R19, but fixed to 5.1 VDC by D9, a zener diode. R23 taps the fixed 5.1 VDC, allowing a user-variable voltage input at pin 6, the negative input. The negative input to U4B, the reference voltage for the voltage comparator, can be measured at TP20 and adjusted by R23. The voltage will be 1 to 2 VDC with an 8.5 VDC output.

The regulated power supply output from TP13 in block B7 is the source for the positive input to U4B. The regulated voltage is reduced by the R20/R26 voltage divider to provide the sample voltage input. This input can be verified at TP19. The voltage at TP19 must be less than the voltage at TP20 for the circuit to operate normally.

The output of U4B, at pin 7, remains at less than 0.25 VDC. Should the sample voltage at the positive input exceed the reference voltage at the negative input, U4B activates and the output at pin 7 will increase to over 1 VDC. This voltage can be viewed at TP21.

When the U4B output voltage at TP21 increases, it forward biases the base-emitter junction of Q4. This pulls the collector LOW, energizing relay K1. When the relay is energized, the regulated output voltage at the normally-closed relay contact removes the voltage to the external load and TP17. LED DS4 provides a visual indication of the over-voltage condition. Diode D8 is placed across K1 to eliminate inductive kickback when the relay power is removed.

Copyright © 2015 by Nida Corporation

Load (Skills07-3)

The Load circuit card provides a constantly-changing load for the PWM Switching Power Supply.

Block B10 is an onboard linear power supply using a 78L12 single IC regulator, IC1. R27 provides isolation and minor circuit protection from the power source, the unregulated DC output from block B1. C11 and C12 eliminate noise at the input and output of IC1. The output, +12 VDC, can be verified at TP26. The regulator supplies power to blocks B11 and B12.

Block B11 contains two voltage comparators, U5A and U5B. Both comparators monitor the input regulated voltage from the PWM Switching Power Supply. U5A monitors the incoming voltage for a too low condition. U5B monitors the incoming voltage for a too high condition. Should the incoming voltage be too high or too low, one of the comparators will activate, disconnecting the voltage to the load circuitry in block B13.

A single output measured at TP29 in block B12 can be used to determine the condition of the incoming DC voltage. TP29 will be HIGH, at +12 VDC, and LOW at about 1.5 VDC when either U5A or U5B have determined the incoming DC voltage is out of tolerance and switches ON to protect the Load circuitry.

Both U5A and U5B are in the single IC labeled U5. Each voltage comparator operates independently but has almost identical circuitry. You will note the only difference between U5A and U5B is the reversal of the input voltage sample and the reference voltage inputs at the negative and positive inputs.

U5A has the input voltage sample at the positive input, pin 3, and the reference voltage derived from the +12 VDC power supply in block B10 at the negative input, pin 2. R40 sets the lower limit reference voltage. When properly set up, pin 1, the output of U5A, will be normally HIGH, about +12 VDC but will go LOW, to less than 1 VDC, when the comparator activates because the sample voltage at the positive input drops lower than the reference voltage at the negative input.

U5B has just the opposite inputs: the input voltage sample at the negative input, pin 6, and the reference voltage at the positive input, pin 5. R40 sets the upper limit reference voltage. When properly set up, the output at pin 7 will be HIGH normally, but go LOW when the comparator activates because the sample voltage at the negative input rises above the reference voltage at the positive input.

The outputs of the U5A and U5B comparators have output indicators, DS5 and DS6, to indicate an input voltage that is out of tolerance. A LOW at either comparator output will illuminate the associated diode.

Copyright © 2015 by Nida Corporation

Load (Skills07-3), continued

The comparator outputs are connected to the cathodes of switching diodes D11 and D12. Diodes D11 and D12 are not conducting in normal conditions with both the cathodes and the anodes HIGH at +12 VDC. When either comparator output goes LOW, the cathode voltage of the associated diode drops to 0.5 VDC and the diode becomes forward biased, causing the output at TP29 to drop LOW to about 0.5 VDC.

TP29 is the input to block B12 containing the power relay and driver. TP29 is common to the negative input of another voltage comparator, U6A, at pin 2. The positive input, pin 3, is fixed at about 6 VDC, half the +12 VDC supply voltage from block B10. In this configuration, U6A has a LOW (1 - 1.5 VDC) output at pin 1 under normal conditions. The output condition of U6A can be confirmed at TP31.

The U6A output rises HIGH should either of the U5 comparators activate, pulling pin 2 of U6A LOW. A HIGH output at U6A pin 1 reverse biases DS7, extinguishing the Relay On LED, but also reverse biases the base-emitter junction of Q5.

Q5 is a PNP transistor, the driver for relay K2. In normal operation, Q5 has proper bias and keeps K2 energized. When the U6A output goes HIGH, Q5 is reverse biased and current stops flowing in the relay K2 coil. The load in block B13 is then removed from the circuit through the action of K2. The collector of Q5 can be measured at TP32. A HIGH condition (+12 VDC) at TP32 indicates Q5 is reverse biased.

The load for the PWM Switching Power Supply is a group of 18 LEDs, DS8 through DS26. The LEDs are configured in three different sized concentric circles of 6 LEDs. Each circle is also made up of different colored LEDs.

The smallest circle, configured of red LEDs, switches on and off at the fastest rate. The next circle, made up of yellow LEDs, is larger and switches at a slower rate. The largest circle, of green LEDs, flashes at the slowest rate. All the LEDs are configured so that only half of each circle (3 LEDs) is illuminated at one time.

The flash rate and LED selection is done by U7, a 14-stage ripple counter IC with an onboard clock. The clock speed is controlled by an RC circuit consisting of R35, R42, R45, and C15. R35 is a variable resistor, allowing frequency adjustments. The clock frequency is 100 Hz.

Two test points are provided in the clock timing circuit, TP37 and TP38. TP38 provides a clean square wave of 100 Hz at 8.5 VDC with a 55% duty cycle.

Copyright © 2015 by Nida Corporation

Load (Skills07-3), continued

The waveform at TP37 will also be 100 Hz, but the waveform will reflect the charge and discharge action the square wave has on C15. Placing the oscilloscope on TP37 without setting the oscilloscope probe to x10 mode will excessively load the circuit and shut down the oscillator. With the oscilloscope probe at x10, the probe might still load the circuit enough to change the frequency slightly.

A ripple counter is a series of flip-flops strung together with the input of each stage connected to the output of the preceding stage. Each stage toggles on the negative transition, and the output frequency of each stage is one-half the input frequency.

So, the initial clock frequency of 100 Hz is divided to 50 Hz by stage 1, 25 Hz by stage 2, 12.5 Hz by stage 3, etc. The outputs used to illuminate the LEDs are the 5th, 6th, and 7th stages with frequencies of about 3 Hz ($100Hz/2^5$), 1.5 Hz ($100Hz/2^6$), and 0.75 Hz ($100Hz/2^7$). This translates to waveform times of 320 ms (red), 640 ms (yellow), and 1.28 s (green) for one full cycle, or 160 ms (red), 320 ms (yellow), and 640 ms (green) for the ON time for the LEDs.

The switching waveforms for the LED outputs can be viewed at TP34, TP35, and TP36. The LEDs are configured so 3 LEDS are illuminated when each output is HIGH and then the other 3 are illuminated when the output is LOW.

OPERATIONAL CHECK

1. System Setup

Refer to the circuit card illustrations following these instructions for the locations of test points, LEDs, and variable resistors.

a. Verify that the circuit cards Skills07-1 (PWM Switching Power Supply I), Skills07-2 (PWM Switching Power Supply II), and Skills07-3 (Load) are installed on the Nida 130E Test Console in positions PC1, PC2, and PC3, respectively.

b. Verify the short 5-pin jumper cable between J1 and J2. Do not twist the cable; the wires should not cross over each other.

c. Set all variable resistors on Skills07-1, 2, and 3 to mid-range position.

d. Set S1 and S2 to the ON (UP) position.

e. Press the AC Power switch on the PC1 position. Verify that the PC1 AC LED is illuminated.

f. Verify the DS1 LED in Block 1 (B1) and the Output LED in Block 8 (B8) are illuminated. Ignore ALL other LEDs at this time.

Copyright © 2015 by Nida Corporation

OPERATIONAL CHECK, continued

2. Circuit Set-up

a. Using the multimeter, adjust R40, the Lower Limit control, for 8.25 VDC at TP27.

b. Using the multimeter, adjust R30, the Upper Limit control, for 8.75 VDC at TP28.

c. Using the oscilloscope, adjust R11, the Frequency control, for a 100 kHz (10 μs) waveform at TP8.

d. Using the multimeter, adjust R4, the Output control, for 9.25 VDC at TP13.

e. Set R23, the Level control, fully counterclockwise. Then, slowly adjust R23 in a clockwise direction just until DS4, the Over (voltage) LED in Block 9, illuminates.

f. Readjust R4, the Output control, for 8.5 VDC at TP13. The Varying Load LEDs should be flashing.

g. Using the oscilloscope, adjust R35, the Clock control, for 100 Hz (10 ms) square wave at TP38. The PWM Switching Power Supply and Loads circuitry should be functioning normally. Complete the Operational Check by Performing the Limit Verification check.

3. Limit Verification Check (Low, High, and Over)

a. Using the multimeter, monitor the voltage at TP13.

b. Slowly adjust R4 counterclockwise until the Low LED illuminates. Voltage at TP13 should be approximately 8.25 VDC and the Varying Load LEDs should not be flashing.

c. Slowly adjust R4 clockwise until the High LED illuminates. Voltage at TP13 should be greater than 8.75 VDC and the Varying Load LEDs should again, not be flashing.

d. Slowly continue to adjust R4 clockwise until the Over LED illuminates. Voltage at TP13 should be greater than 9.00 VDC and voltage to the Load circuit is removed and the Low LED illuminates.

e. Readjust R4, the Output control, for 8.5 VDC at TP13. The Varying Load LEDs should be flashing.

End of Operational Check.

Copyright © 2015 by Nida Corporation

CIRCUIT CARD PICTORIALS & TEST POINT LIST

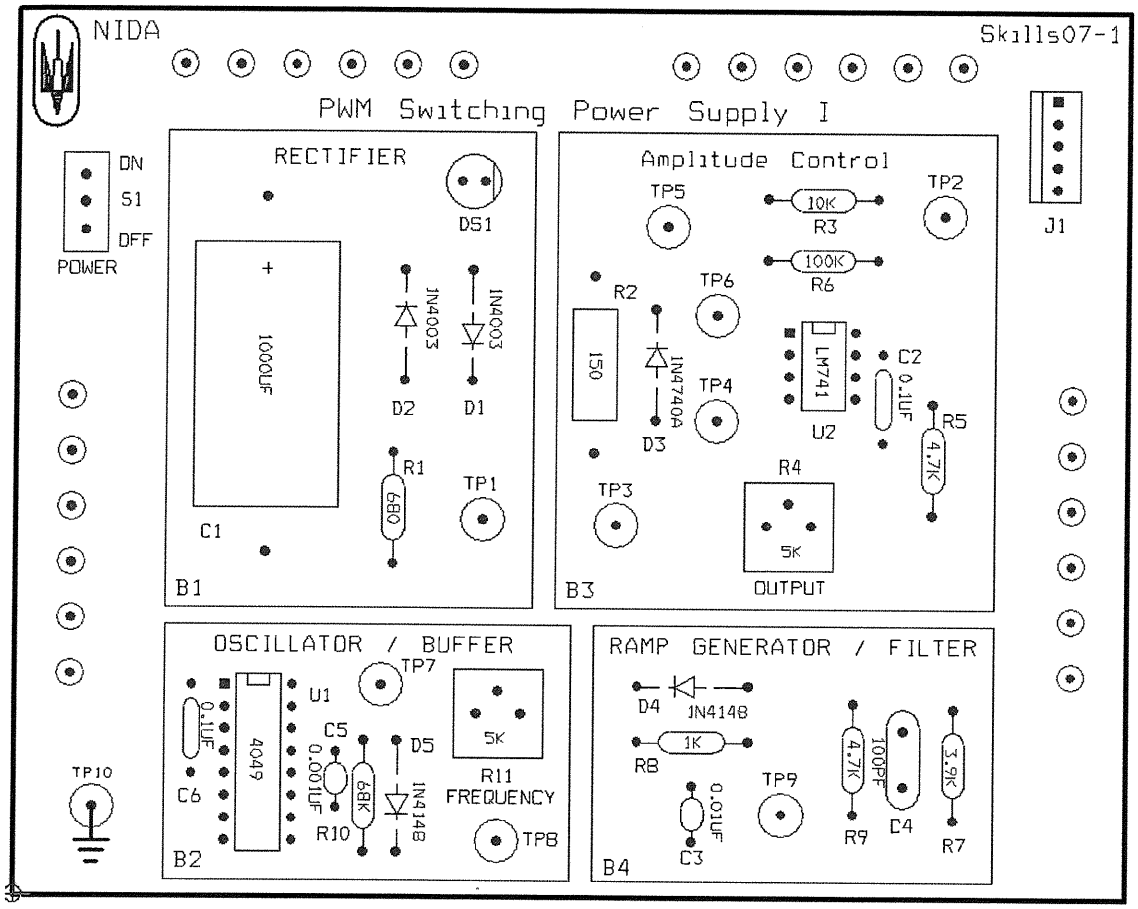

PWM Switching Power Supply I

Test Point	Description	Normal Condition
TP1	DC Unregulated	15 – 19 VDC
TP2	DC Regulated	8.5 VDC
TP3	Fixed +10 VDC	10 VDC
TP4	Reference Input (+)	8.6 – 9 VDC
TP5	Reference	10.5 – 11.5 VDC
TP6	Sample Input (-)	Equal to TP4
TP7	Oscillator	100 kHz
TP8	Buffer Output	100 kHz Square Wave
TP9	Ramp Output	100 kHz Ramp Wave
TP10	Ground	Ground

PWM Switching Power Supply I Test Point List

Copyright © 2015 by Nida Corporation

CIRCUIT CARD PICTORIALS & TEST POINT LIST, continued

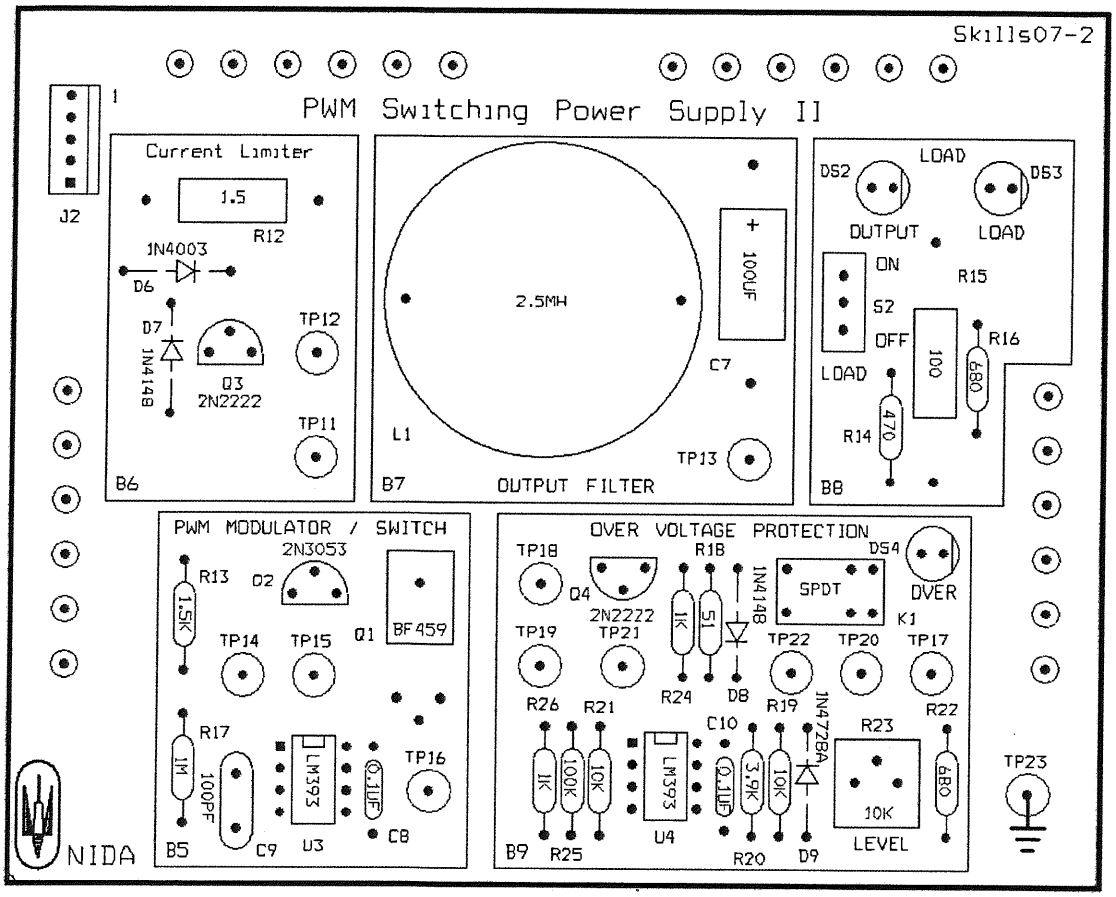

PWM Switching Power Supply II Logic Circuit Card

Test Point	Description	Normal Condition
TP11	Switch Output	100 kHz Switch Output
TP12	Limiter Output	100 kHz Switch Output
TP13	Filter Output	8.5 VDC
TP14	Ramp Input (-)	100 kHz Ramp Signal
TP15	Reference Input (+)	10.5 – 11.5 VDC
TP16	Comparator Output	100 kHz Switch Signal
TP17	Over-Voltage Output	8.5 VDC
TP18	Unregulated DC	15 – 19 VDC
TP19	Regulated Input (+)	1.5 – 2 VDC
TP20	Reference Input (-)	Higher than TP19
TP21	Comparator Output	Less than 0.25 VDC
TP22	Relay Drive	14 – 19 VDC
TP23	Ground	Ground

PWM Switching Power Supply II Test Point List

Copyright © 2015 by Nida Corporation

CIRCUIT CARD PICTORIALS & TEST POINT LIST, continued

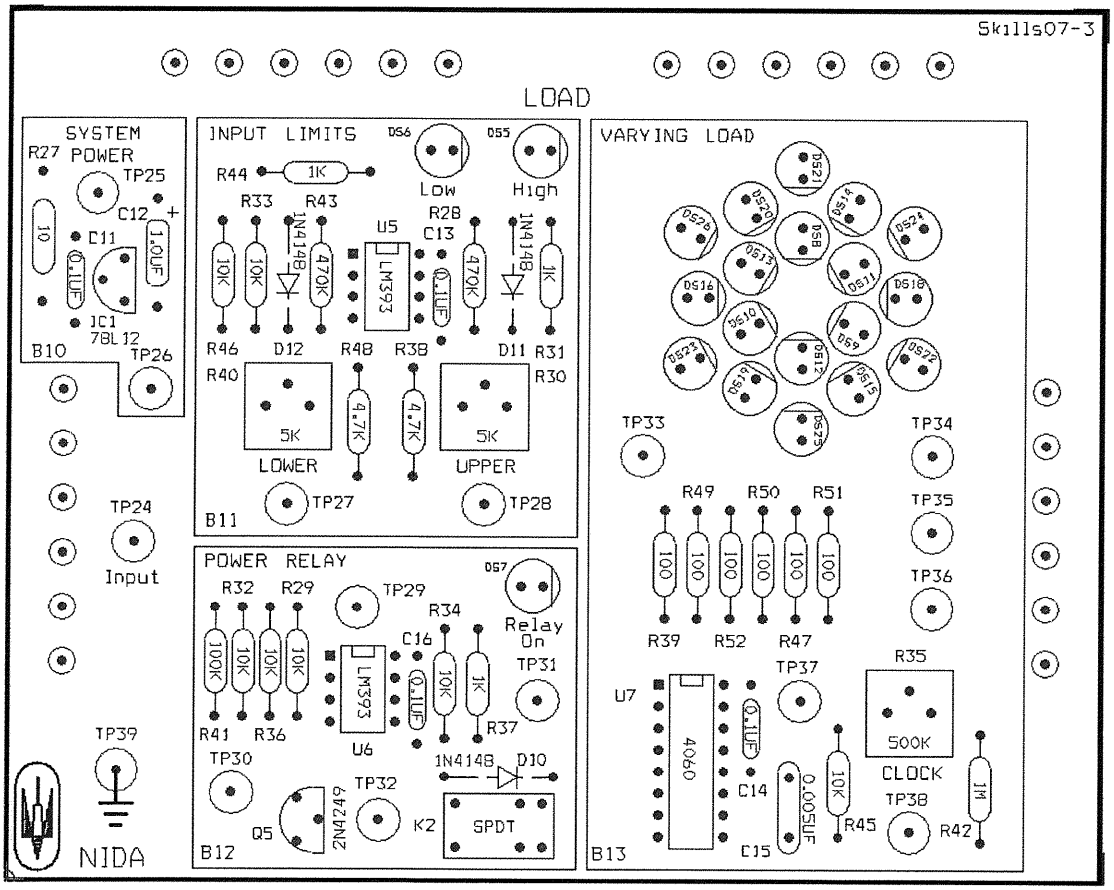

Load Circuit Card

Test Point	Description	Normal Condition		Test Point	Description	Normal Condition
TP24	DC Input	8.5 VDC		TP32	Emitter of Q5	0.6 VDC Over TP31
TP25	Unregulated DC	15 – 19 VDC		TP33	Load Input	8.5 VDC
TP26	System Power Output	12 VDC		TP34	U7 Q5 Output	3 Hz Square Wave
TP27	Lower Limit Input (-)	8.25 VDC		TP35	U7 Q6 Output	1.5 Hz Square Wave
TP28	Upper Limit Input (+)	8.75 VDC		TP36	U7 Q7 Output	0.75 Hz Square Wave
TP29	Comparator Output	12 VDC		TP37	100 Hz Clock Source	100 Hz Spiked ± Ramp
TP30	Comparator Input (+)	6 VDC		TP38	100 Hz Clock Output	100 Hz Square Wave
TP31	Base of Q5	1 – 1.5 VDC		TP39	Ground	Ground

Load Circuit Card Test Point List

Copyright © 2015 by Nida Corporation

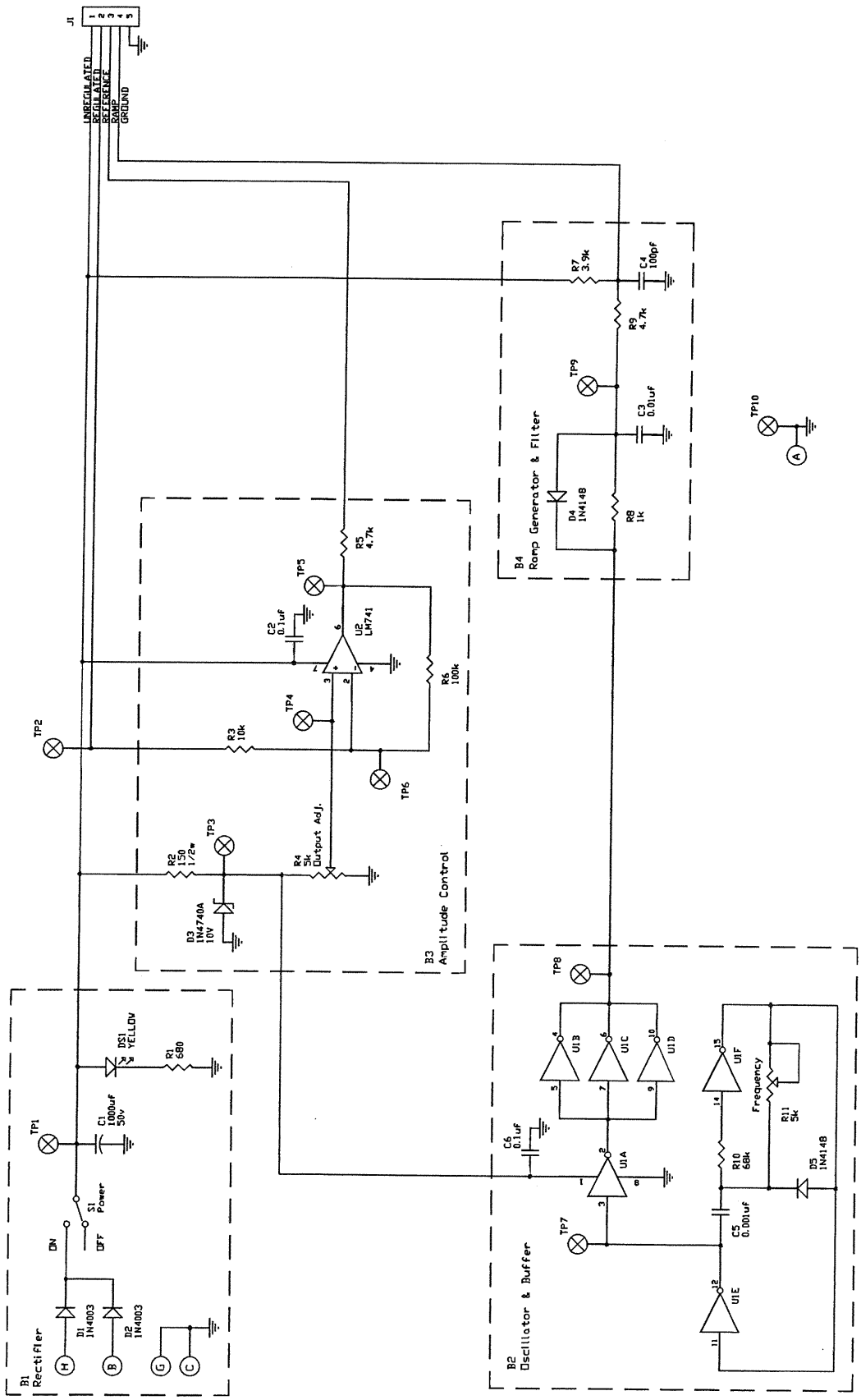

Skills07-1

Copyright © 2015 by Nida Corporation

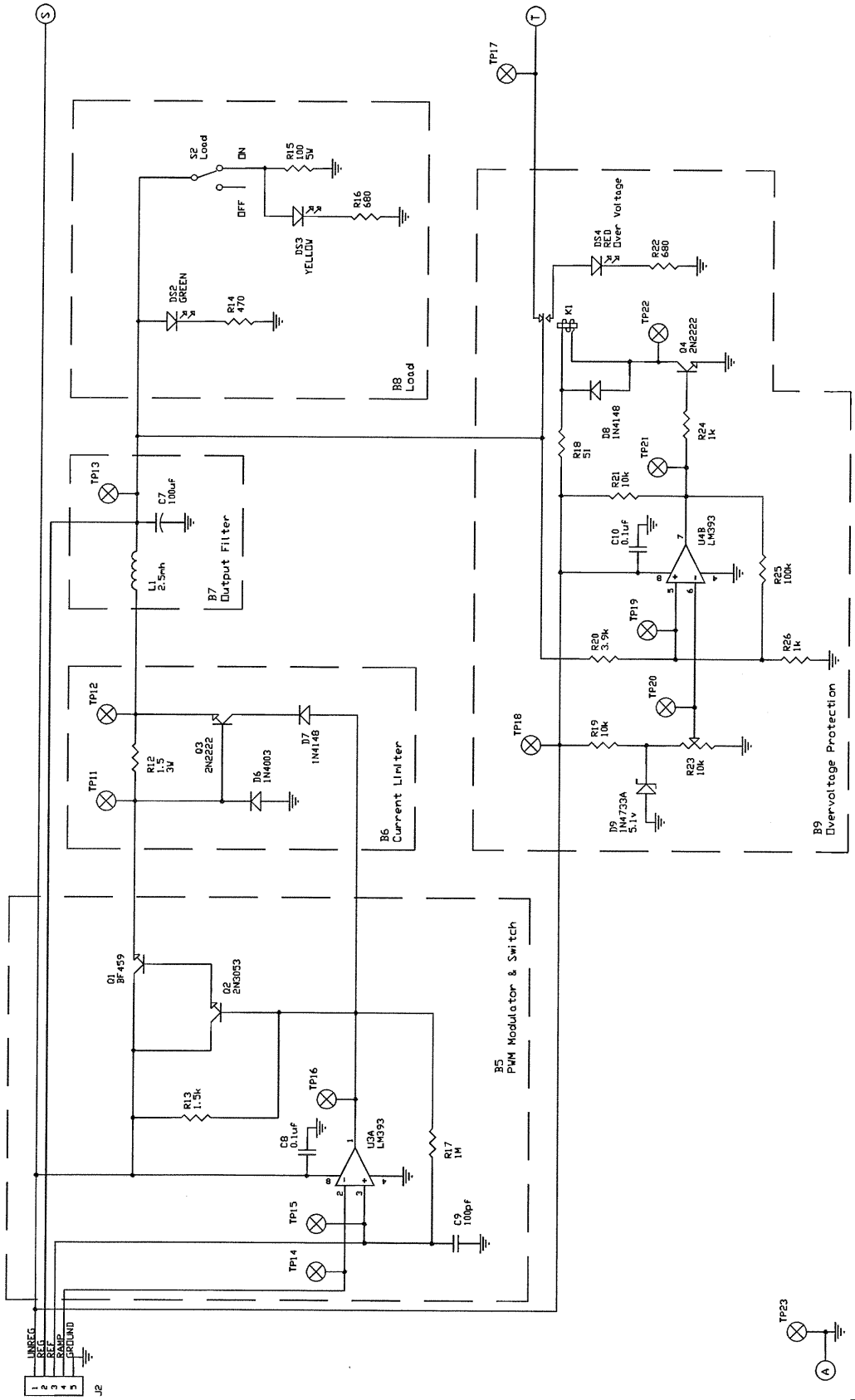

Skills07-2

Copyright © 2015 by Nida Corporation

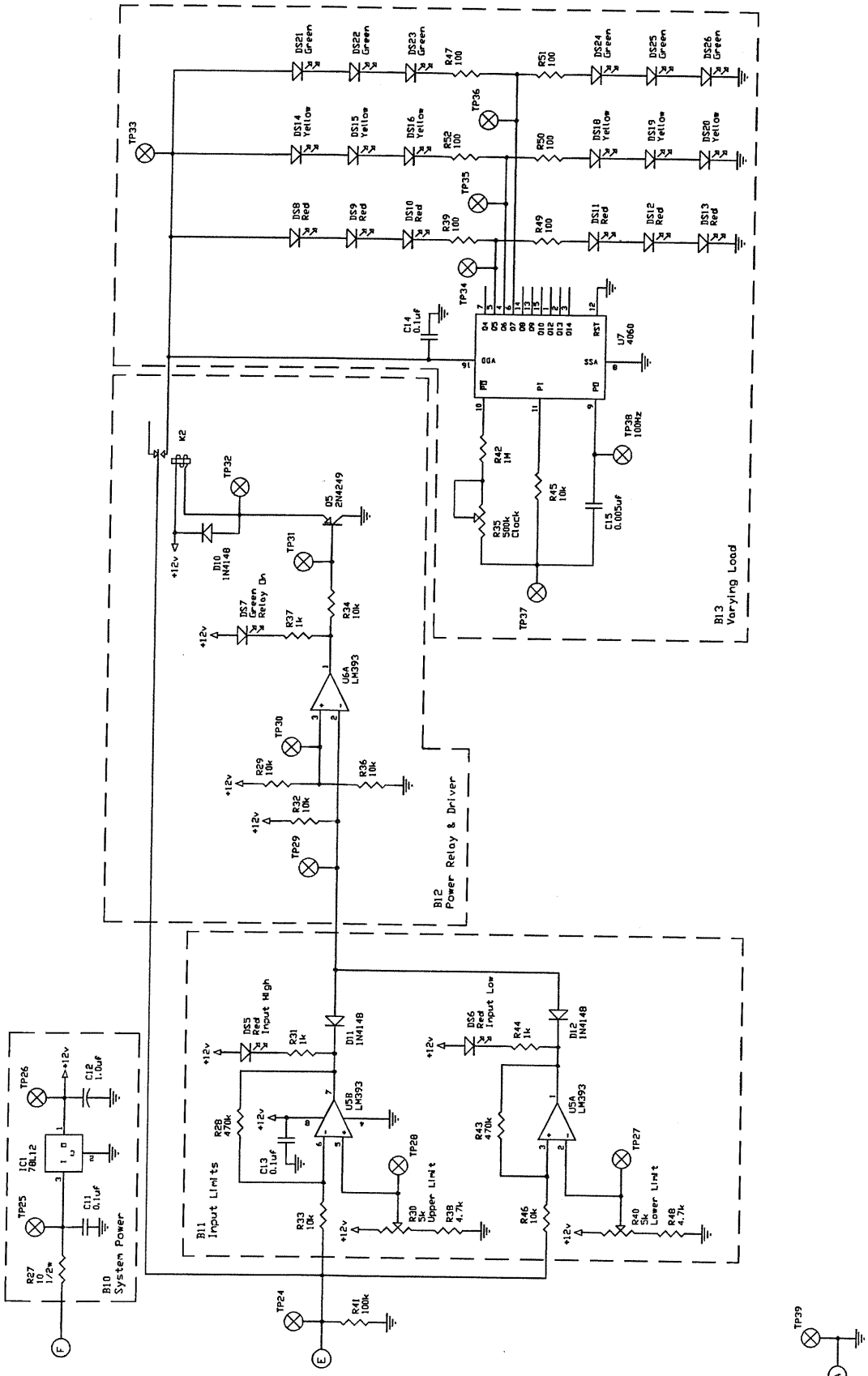

Copyright © 2015 by Nida Corporation

TROUBLESHOOTING PROJECT

Electronics Technology

SkillsUSA
Champions at Work®

Contestant Handout

2015

Nida Corporation
300 John Rodes Blvd.
Melbourne, Florida 32904

TROUBLESHOOTING PROJECT

Overview

Total Time - 110 min | Total Points - 300 | Overall Weight - 30%

Instructions

You will be scored on your ability to:

1. Read and follow instructions.
2. Perform an operational check.
3. Recognize abnormal circuit operation.
4. Identify an appropriate resolution for circuit conflicts.

Judges are **NOT** permitted to answer questions during the competition. Should you encounter a technical problem, you may request assistance by pressing the "**H**" key and then the "**ENTER**" key on the test console. All technical problems will be corrected by the Judge and no demerits will be assessed.

Judges **WILL** assess a 2 point demerit for each violation of the following. Demerit points will be used as a discriminating factor in breaking ties.

1. Unwarranted requests for assistance (2 points)
2. Identifying good equipment as faulty (2 points)
3. Failure to follow instructions (2 points)
4. Safety violations (2 points)
   - ✓ Wearing jewelry
   - ✓ Not wearing safety glasses when required
   - ✓ Improper use of equipment

Materials Required

Troubleshooting Project Contestant Handout
Technical Manual
Reference Manual (Data Sheets)
Skills07-1 PWM Switching Power Supply I Circuit Card
Skills07-2 PWM Switching Power Supply II Circuit Card
Skills07-3 Load Circuit Card
5 Pin Jumper Cable
Oscilloscope
Multimeter
Nida Screwdriver
Nida 130E Test Console
Miscellaneous Hand Tools as Required

Copyright © 2015 by Nida Corporation

Procedure

Log-in. Observe the display on the Nida 130E Test Console and ensure that it looks like the example shown in Figure 1. Verify that your contestant number replaces the **[--- xx ---]** shown in the example.

```
TROUBLESHOOTING
[ --- xx --- ]

Part 1
Judge's Code: ___
```

Figure 1

Part 1 is worth a maximum of 30 points. You will be required to perform the Operational Check on the PWM Switching Power Supply and Load circuits.

Parts 2 - 19 are worth 270 points and will test your ability to perform an operational check and troubleshoot the PWM Switching Power Supply and Loads circuitry. Detailed instructions will be provided before you begin.

CAUTION! During this Troubleshooting Project, use only test points when measuring voltage, current, and resistance during the malfunction identification process.

Remember to remove voltage from the circuit during resistance measurements or a safety violation will be assessed.

DO NOT REMOVE CIRCUIT CARDS OR CABLES FROM THE TEST CONSOLE.

Begin when ready!

Copyright © 2015 by Nida Corporation

Part 1

a. Perform the Operational Check provided in the "**Technical Manual**". When you have ensured that the PWM Switching Power Supply and Load Systems are operating correctly, proceed to step "b".

b. When your circuit has passed the Operational Check, configure the oscilloscope and multimeter to monitor the following test points:

   1) Multimeter - TP13

   2) Oscilloscope – Channel 1 Probe at TP8

c. Press the "**H**" key and then the "**ENTER**" key on the keypad to request your first verification check.

   The Judge will review your setup and alignment, perform a test, and then input your score into the test console.

****** Continue with Parts 2 – 19 when Ready ******

Copyright © 2015 by Nida Corporation

Part 2 through 19

a. Observe the display on the Nida 130E Test Console and ensure that is looks like the example shown in Figure 2 with your contestant number in place of the **[--- xx ---]**. Verify that Part 2 and the word Proceed are displayed.

```
TROUBLESHOOTING
[ --- xx --- ]

Part 2
Proceed: ___
```

Figure 2

b. The remaining Parts 2-19 will test your ability to identify the operational state of the PWM Switching Power Supply. Each of these 18 parts is worth 15 points and will be judged on your answers to the following four questions:

1. **Proceed?** "Are you ready to continue?" Answer: **"Y"**
2. **Pass or Fail?** "What is the result of the operational check?" Answer: **"P" or "F"**
3. **Block #?** "Which block is causing the problem?" Answer: **"1" through "13"**
4. **Reference #?** "Which Reference # best describes your problem?" Answer: **"1" to "22"**

Question 1: When the word **Proceed** is displayed on the Nida 130 Test Console, the PWM Switching Power Supply and Load circuits are in a normal operating state. No malfunction is present and operational readiness may be verified using the Operational Check in the "Technical Manual". Enter a **"Y"** when you wish to continue.

Question 2: Each of the 18 parts may or may not have a fault. If the circuit passes your operational check, enter the letter **"P"** for pass; you will immediately move to the next part of the troubleshooting project. If the circuit fails your operational check, enter an "F" for fail; you will go to the next Question.

Question 3: Isolate the problem to a functional block. Use only test points for troubleshooting. Enter the number from **1 through 13** (as marked on the schematic and circuit cards) that correspond to the functional block on the circuit card that is causing the problem.

Part 2-19 continued on next page

Copyright © 2015 by Nida Corporation

Part 2 through 19, continued

Question 4 requires you to identify the failed component. Select the reference number from the **Malfunction Descriptions** provided on page 6 of this handout. Choose the description that best describes the defect. Enter that reference number in the console.

CAUTION! During this Troubleshooting Project, use only test points when measuring voltage, current, and resistance during the malfunction identification process.

Remember to remove voltage from the circuit during resistance measurements or a safety violation will be assessed.

★ **Do not perform adjustments while troubleshooting; No malfunction can be corrected by making adjustments.** ★

DO NOT REMOVE CIRCUIT CARDS OR CABLES FROM THE TEST CONSOLE.

****** Continue When Ready ******

Copyright © 2015 by Nida Corporation

MALFUNCTION DESCRIPTION

Locate the **CIRCUIT CARD #** and associated **MALFUNCTION** that best describes the operation of your circuit. Enter the corresponding **REFERENCE #** on the Nida Test Console keypad. Malfunction descriptions may be used once, more than once, or not at all.

CIRCUIT CARD #	MALFUNCTION	REFERENCE #
Skills07-1	U2	1
Skills07-1	D3 open	2
Skills07-1	U1E	3
Skills07-1	R5 open	4
Skills07-1	R3 open	5
Skills07-1	R8 open	6
Skills07-1	C3 shorted	7
Skills07-2	C9 shorted	8
Skills07-2	U3A	9
Skills07-2	D9 shorted	10
Skills07-2	Q1 C-E short	11
Skills07-2	D9 open	12
Skills07-2	L1 open	13
Skills07-2	Q4 C-E short	14
Skills07-2	Q1 or Q2 B-E open	15
Skills07-3	R48 open	16
Skills07-3	U7	17
Skills07-3	C15 shorted	18
Skills07-3	K2 open	19
Skills07-3	IC1	20
Skills07-3	U6A	21
Skills07-3	D12 open	22

Copyright © 2015 by Nida Corporation

TROUBLESHOOTING PROJECT

Electronics Technology

SkillsUSA
Champions at Work®

Judge's Scoring Guide

2015

Nida Corporation
300 John Rodes Blvd.
Melbourne, Florida 32904

TROUBLESHOOTING PROJECT

Overview

Total Time - 110 min Total Points - 300 Overall Weight - 30%

The Troubleshooting Project has 19 parts. Contestants will use the preassembled circuit cards Skills07-1, Skills07-2, and Skills07-3 to demonstrate their ability to recognize and analyze fault conditions. Judges will observe, score, and enter the results into the Nida 130E Test Console during Part 1.

General Guidelines

a. Judges may **NOT** provide technical assistance or give advice during an event.

b. Judges will ensure all materials have been issued prior to the start of an event.

c. Judges may assist with technical problems that interfere with an event.

d. Judges must respond immediately to a **HELP** request.

e. Demerit Codes

- Unwarranted requests for assistance J33
- Identifying good equipment as faulty J43
- Failure to follow instructions J53
- Safety violations J63

Copyright © 2015 by Nida Corporation

Event Scoring **Points**

PART 1

Operational Check ..... **0,5,10,15,20,25, or 30**

NOTE

Check items 1-5 below and award the indicated points where appropriate. Input a single combined score between zero (0) and thirty (30) points.

1. Multimeter at TP13 5
2. Reading 8.5 VDC at TP13 5
3. Probe 1 at TP8 5
4. Reading 100 Hz square wave at TP8 5
5. Varying load lights flashing 10

PART 2-19

Troubleshooting ..... **0 to 270**

**** END OF EVENT ****

Copyright © 2015 by Nida Corporation

WRITTEN TEST

Electronics Technology

SkillsUSA
Champions at Work®

Contestant Handout

2015

Nida Corporation
300 S. John Rodes Boulevard
Melbourne, Florida 32904

WRITTEN TEST

Overview

Total Time – 60 min Total Points – 150 pts Overall Weight – 15%

Instructions

1. Read and follow instructions.
2. Answer questions correctly.

Judges are **NOT** permitted to answer questions during the competition. Should you encounter a technical problem, you may request assistance by pressing the **"H"** key and then the "**ENTER**" key on the test console. All technical problems will be corrected by the Judge and no demerits will be assessed.

Judges **WILL** assess a 2-point demerit for each violation of the following. Demerit points will be used as a discriminating factor in breaking ties.

1. Unwarranted requests for assistance (2 points)
2. Identifying good equipment as faulty (2 points)
3. Failure to follow instructions (2 points)
4. Safety violations (2 points)

Materials Required

Written Test Project - Contestant Handout
Paper Test Question Booklet
Back-up Paper and Answer Sheet (at the end of this manual)
Nida Model 130E Test Console
Pencil

Quick Reference Listing

[S] Enter "S" to skip question

[R] Enter "R" & question number to go to a specific question (example - R26).

[Y] Enter "Y" to answer a yes question.

[N] Enter "N" to answer a no question.

[EXIT] Enter "EXIT" to end the test.

[1, 2, 3, 4] Enter these numbers to identify correct answer.

Copyright © 2015 by Nida Corporation

Procedure

1. Observe the display on the Nida Model 130E Test Console and ensure that it looks like the example shown in Figure 1. Verify that your contestant number replaces the **[-- xx --]** shown in the example.

```
[ -- xx -- ]

WRITTEN TEST

Question 1 [  ]: ___
```

Figure 1

2. Read the question carefully and select the best answer from the choices. A correct answer is awarded 2 points. Questions skipped (never answered) are awarded zero points.

3. If you wish to answer the question, enter the **"1, 2, 3, or 4"** number designator on the Nida Model 130E Test Console keypad and press ENTER. Your response will be recorded, and the display will sequence to the next question number.

4. If you choose to skip a question, enter the letter **"S"** on the Nida Model 130E Test Console keypad and press ENTER. No response is recorded (never answered), and the display will sequence to the next question number.

5. When all 75 questions have been displayed in sequence, you will be asked if you are finished. Enter **"Y"** to end the test. Enter **"N"** to begin the review mode. You will jump to the beginning of the test. If you wish to go to a specific question number, enter **"R"** followed by the question number. For example, R26 will take you to question number 26.

6. Entering the word "EXIT" at any time will end the test.

7. Questions **MUST** be answered using the Nida Model 130E Test Console keypad in order to receive credit. However, the scratchpad answer sheet has been provided as a reference. The scratchpad answer sheet will be destroyed at the conclusion of the test and will have no bearing on final test results. Begin when ready.

Copyright © 2015 by Nida Corporation

CONTESTANT SCRATCHPAD ANSWER SHEET - WRITTEN TEST

Total Points - 150

CONTESTANT #: _____

1.	1	2	3	4	26.	1	2	3	4	51.	1	2	3	4
2.	1	2	3	4	27.	1	2	3	4	52.	1	2	3	4
3.	1	2	3	4	28.	1	2	3	4	53.	1	2	3	4
4.	1	2	3	4	29.	1	2	3	4	54.	1	2	3	4
5.	1	2	3	4	30.	1	2	3	4	55.	1	2	3	4
6.	1	2	3	4	31.	1	2	3	4	56.	1	2	3	4
7.	1	2	3	4	32.	1	2	3	4	57.	1	2	3	4
8.	1	2	3	4	33.	1	2	3	4	58.	1	2	3	4
9.	1	2	3	4	34.	1	2	3	4	59.	1	2	3	4
10.	1	2	3	4	35.	1	2	3	4	60.	1	2	3	4
11.	1	2	3	4	36.	1	2	3	4	61.	1	2	3	4
12.	1	2	3	4	37.	1	2	3	4	62.	1	2	3	4
13.	1	2	3	4	38.	1	2	3	4	63.	1	2	3	4
14.	1	2	3	4	39.	1	2	3	4	64.	1	2	3	4
15.	1	2	3	4	40.	1	2	3	4	65.	1	2	3	4
16.	1	2	3	4	41.	1	2	3	4	66.	1	2	3	4
17.	1	2	3	4	42.	1	2	3	4	67.	1	2	3	4
18.	1	2	3	4	43.	1	2	3	4	68.	1	2	3	4
19.	1	2	3	4	44.	1	2	3	4	69.	1	2	3	4
20.	1	2	3	4	45.	1	2	3	4	70.	1	2	3	4
21.	1	2	3	4	46.	1	2	3	4	71.	1	2	3	4
22.	1	2	3	4	47.	1	2	3	4	72.	1	2	3	4
23.	1	2	3	4	48.	1	2	3	4	73.	1	2	3	4
24.	1	2	3	4	49.	1	2	3	4	74.	1	2	3	4
25.	1	2	3	4	50.	1	2	3	4	75.	1	2	3	4

Copyright © 2015 by Nida Corporation

SkillsUSA
2015 Contest Projects

First Aid/CPR

Click the “Print this Section” button above to automatically print the specifications for this contest. Make sure your printer is turned on before pressing the button.

Skills USA 2015 **CONTESTANT NUMBER_____**

SCENARIO 1: ADULT CPR/AED

You and a coworker are working a First Aid Station at a convention when you called to an Adult victim who has collapsed. What do you do next?

CHECK FOR SCENE SAFETY --- PPE/BSI	_____	**10**
<u>JUDGE STATES; SCENE IS SAFE</u>		
CHECK RESPONSIVNESS: SHAKE AND SHOUT	_____	**10**
<u>JUDGE STATES: UNRESPONSIVE</u>		
CHECK AIRWAY AND BREATHING		
HEAD TILT CHIN LIFT	_____	**10**
CHECK BREATHING	_____	**10**
SCAN BODY FOR SEVERE BLEEDING	_____	**10**
TELL PARTNER TO CALL 911 AND GET THE AED	_____	**15**
CHECK PULSE 5 TO 10 SECONDS	_____	**10**
<u>JUDGE STATES: NO PULSE</u>		
EXPOSE CHEST	_____	**10**
BEGIN COMPRESSIONS 30:2 (CAB) BREATHS WITH POCKET MASK	_____	**15**
<u>JUDGE STATES; NOT BREATHING, NO PULSE</u>		
CONTINUE CPR 30:2---BREATHS WITH POCKET MASK	_____	**15**
<u>JUDGE STATES: PARTNER ARRIVES WITH AED</u>		
CONTESTANT TELLS PARTNER TO TAKE OVER CPR	_____	**10**
WIPE CHEST AREA IF WET, REMOVE PATCHES	_____	**10**
TURN ON AED	_____	**15**
PLACE PADS ON VICTIM AND ANALYZE VICTIM	_____	**15**
CONTESTANT TELLS PARTNER TO STOP CPR	_____	**15**
DELIVERS SHOCK WHEN PROMPTED	_____	**15**
EVERYONE CLEAR - STAND CLEAR -- SHOCKING, SHOCKING	_____	**10**
CONTESTANT PERFORM CPR FOR 2 MINUTES 30:2 WITH PARTNER DOING BREATHS	_____	**15**
<u>AFTER 2 MNUTES JUDGE STATES: NOT A SHOCKABLE RHYTHM</u>		
CHECK ABCs	_____	**10**
<u>JUDGE STATES NO PULSE NOT BREATHING</u>		
CONTESTANT TELLS PARTNER TO SWITCH CONTESTANT TAKES OVER BREATHING	_____	**10**
TOTAL POINTS AWARDED	_____	**(240)**

JUDGES NAME:_____

COMMENTS

Skills USA 2015 **CONSTESTANT NUMBER_____**

SCENARIO 2: Child CPR.

You are at a family gathering when a child collapses by the pool.
What do you do next?

CHECK FOR SCENE SAFETY --- PPE/BSI	_____	**15**
JUDGE STATES: SCENE IS SAFE		
CHECK FOR RESPONSIVENESS (SHAKE BOTH SHOULDERS)	_____	**15**

JUDGE STATES NOT RESPONSIVE

TELL SOMEONE TO CALL 911	_____	**15**
CHECK PULSE 5 TO 10 SECONDS	_____	**15**
JUDGE STATES NO PULSE		
EXPOSE CHEST	_____	**20**
BEGIN COMPRESSIONS 30:2 (CAB) BREATHS WITH POCKET MASK	_____	**15**
CAN USE ONE HAND OR BOTH HANDS (PROPER PLACEMENT	_____	**15**
CHECK AIRWAY AND BREATHING		
HEAD TILT CHIN LIFT	_____	**15**
CHECK BREATHING	_____	**15**
SCAN BODY FOR SEVERE BLEEDING	_____	**15**

JUDGE STATES NOT BREATHING, NO PULSE

PERFORM CPR FOR 2 MINUTES 30:2 X 5	_____	**15**

MUST DO 5 CYCLES OR JUDGE STATES 2 MINUTES HAS GONE BY

AND CONTINUE CPR TILL EMS ARRIVES	_____	**15**
TRANSPORT	_____	**15**
TOTAL POINTS AWARDED:	_____	**(200)**

JUDGES NAME_____

COMMENTS

Skills USA 2015 **CONTESTANT NUMBER_____**

SCENARIO 3: INFANT CPR:
You are visiting a Park when a woman calls for help you find her infant son unconscious.
WHAT DO YOU DO NEXT??

CHECK FOR SCENE SAFETY PPE/BSI	_____	**15**
JUDGE STATES: SCENE IS SAFE		
CHECK FOR CONSCIOUSNESS, (TAP BOTTON OF FEET SHOUT LOUD)	_____	**15**
JUDGE STATES: NOT RESPONSIVE AND YOU ARE ALONE		
CHECK PULSE 5 TO 10 SECONDS BRACHIAL PULSE	_____	**10**
JUDGE STATES NO PULSE		
EXPOSE CHEST	_____	**15**
HEAD TILT CHIN LIFT (SNIFFING POSITION)	_____	**15**
CHECK BREATHING	_____	**10**
SCAN BODY FOR SEVERE BLEEDING	_____	**10**
BEGIN COMPRESSIONS (CAB) 30:2 BREATHS WITH POCKET MASK UPSIDE DOWN FOR 5 CYCLES	_____	**15**
THEN CALL 911	_____	**15**
CAB 'S	_____	**15**
JUDGE STATES: NOT BREATHING, NO PULSE		
PROPER HAND PLACEMENT	_____	**15**
CONTINUE COMPRESSIONS 30:2 WITH POCKET MASK UPSIDE DOWN.	_____	**15**
JUDGE STATES: INFANT IS RESPONSIVE		
MAINTAIN AIR WAY	_____	**10**
CHECK A, B , C	_____	**15**
TRANSPORT	_____	**10**
TOTAL POINTS AWARDED:	_____	**(200)**

JUDGES NAME:_____

COMMENTS:

Skills USA 2015 **CONTESTANT NUMBER_____**

SCENARIO 4: First Aid
You and your friends are out on a hike when one of friends
Stumbles and falls off the hiking trail and twists their right leg.
What do you do next?

Check for scene safety ask if you can help	**_____**	**8**

Victim states he/she slid on some gravel.
There is a large abrasion on their left forearm. Victim is holding their arm.

Put on gloves	**_____**	**8**
Have someone call EMS	**_____**	**8**

Victim States my arm hurts to move it:

Clean wound area with cleaning pad	**_____**	**8**
Check to see if arm is bruised or discolored	**_____**	**8**

Judge states Victim has bruising on left forearm

Ask the patient to support their arm while applying ointment And large band aid to area (simulated)	**_____**	**15**
Check the injured area for discoloration and pain (Support above and below the site of injury.)	**_____**	**15**
Place a sling from a triangular bandage on the injured arm and secure	**_____**	**15**
Tie 1 triangular bandage securely across the Chest and secure	**_____**	**15**
Recheck for feeling, warmth, and color of fingers	**_____**	**15**
Continue to monitor victim until help arrives.	**_____**	**5**

TOTAL POINTS AWARDED: **_____** **(120)**

JUDGES NAME:_____

COMMENTS:

8killsUSA 2015 **CONTESTANTS NUMBER_____**

SCENARIO: 5. MEDICAL EMERGENCY:

You are attending a work day for your school when one of the teachers slumps over. It is hot and humid outside. What do you do next?

Check the scene for safety ask if you can help	_____	6
Victim states he/she is hot and tired Put on PPE/BSI	_____	6
Have someone call EMS	_____	6
Move Victim to shade and place cool towel on neck and give water.	_____	6
Check to see if skin is cool and clammy	_____	12

Judge States: skin is normal

Judge states Victim has bruising on right elbow

Ask the patient if they have pain anywhere else He/ She says their right elbow is hurting it is swollen	_____	12
Check the injured area for discoloration and pain (Support above and below the site of injury.)	_____	12
Place a sling from a triangular bandage on The injured arm and secure	_____	15
Tie 2 triangular bandages securely across the Chest and secure	_____	24
Recheck for feeling, warmth, and color on fingers	_____	15
Continue to monitor victim until help arrives.	_____	6

TOTAL POINTS AWARDED ---------- **(120)**

JUDGES NAME:_____

COMMENTS

SkillsUSA
2015 Contest Projects

Graphic Communications

Click the “Print this Section” button above to automatically print the specifications for this contest. Make sure your printer is turned on before pressing the button.

Overview of Graphic Communications Contest (1 of 3 pages)

Purpose

To assist in preparing along with evaluating each contestant for real world employment, while recognize outstanding students for excellence and professionalism in the field of graphic communications.

Changes

The SkillsUSA - Graphic Communications Contest is constantly evolving to represent the latest technology in the graphics/printing industry. Based off of the suggestions from our technical team, the key element of change for the Graphic Communications Contest in 2015 was the Workflow, from the layout of the equipment on the contest floor, to the contest piece itself. We hear the term Workflow used a lot in production environments, now we are bringing this element into our contest. Workflow of a printed piece is just as important as the Workflow of how the job moves throughout a print shop. In the past each section of the Graphic's contest used a totally different design job. In 2015, the National Graphic Communication contest used a magazine that was incorporated into each section of the contest.

Floor Layout

In 2015, the Graphic Communication Contest sections and equipment was strategically placed to show the Workflow of a job being produced from beginning to end with different types of graphics technology. In our contest floor layout you'll notice that at one end we began with Production Planning. The next section was a combination of what was Electronic Prepress and Preflight. This new section is now called Digital Workflow, which contained the computer stations for recreating a magazine cover and then outputting the saved file to a Digital Proof Press. The next station was Digital Press, followed by Offset Press and then Finishing.

Contest Description

Graphic Communication contestants participate in a seven section contest (listed on next page). A magazine cover is developed / produced through each section of the contest. This workflow from start to finish gives the representation of what it takes to produce a printed piece from the design stages to the final product whether it is output on a Digital Press or an Offset Press with Post-press finishing equipment.
Contestants are trained by professionals from the industry on all equipment prior to the contest day. Instructors/advisors are welcome and encouraged to attend during training.

Keep Students Competitive - Complete Contest is Available

The complete Graphic Communications 2015 National Contest is available to use at your State Level Competition. **Contact your SkillsUSA State Director** for the complete contest containing all documents in their original format, as well as the fonts, logos, photos and other images shown on the following pages.

Visit Future Printers of America online for current contest updates, photos from SkillsUSA Nationals and our Industry Support:

Future Printers of America website ..... www.futureprintersofamerica.com
or send an email to .....info@FPAink.com

FUTURE PRINTERS of America

SkillsUSA®

Overview of Graphic Communications Contest (2 of 3 pages)

Seven Sections of the Contest - listed in Sequence

TECHNICAL KNOWLEDGE

The contestant completes a general technical knowledge assessment in Graphic Communications.
Contest development provided by Printing Industries of America.

ORAL PROFESSIONAL ASSESSMENT

The contestant participates in an interview exercise using their resume where a team of experts work together interviewing the contestant. The contestant will be able to select from a few different types of graphics/printing positions, that they will interview for and be assessed by the guidelines set in place.
Contest development provided by Printing Industries of America.

PRODUCTION PLANNING

The contestant solves a written production problem relating to paper, ink, hourly rate and other production costs. The results show the cost justification between offset and digital printing.
Contest development provided by Printing Industries of America.

DIGITAL WORKFLOW

The contestant accesses files using Adobe CC on a Macintosh computer donated for use by Ricoh. The contestant follows instructions to match a provided sample of a magazine cover. The contestant will create the insert pages from files provided. The contestant then preflights the job and reviews the overall quality of the file. The assembled magazine file is saved to a storage device and then output on a Xerox Digital Press where the contestant will view a proof of the final product.
Contest development provided by RR Donnelley.

DIGITAL PRESS OPERATIONS

The contestant outputs various jobs on a Ricoh Digital Press including variable data files and a correct version of the magazine cover that was recreated in the Digital Workflow section of the contest.
Contest development provided by Ricoh.

OFFSET PRESS OPERATIONS

The contestant operates a Heidelberg Printmaster 46 press, to print a single color logo onto the preprinted magazine cover. The contestant will be required to setup the feeder and delivery, install a plate, register a single color logo into the correct position to create a final magazine cover on an offset press. In addition to operating the press, the contestant will be provided with preprinted material, which they will examine and identify printing issues (flaws) and take density readings.
Contest development provided by Heidelberg.

FINISHING

The contestant operates a Baum programmable paper cutter, properly trimming down the magazine cover provided that will be preprinted 4 up on a sheet. The contestant will also setup a table top Baumfolder for various folding exercises including folding the magazine cover, followed by a short written test on finishing terms.

FUTURE PRINTERS of America

SkillsUSA®

Overview of Graphic Communications Contest (3 of 3 pages)

Supporters - listed in alphabetical order

Baumfolder
Future Printers of America
Graphic Arts Education Research Foundation
Heidelberg
National Council For Print Industry Certifications
Print Craft Supply
Printing Industries of America
Quad Graphics
Ricoh
RR Donnelley
Xerox

Equipment Used at 2015 National SkillsUSA

Heidelberg Printmaster QM 46-2
Heidelberg Saphira Pressroom Ink and Chemistry
BaumCut 26.4"
Baum 714XLT Folder
Ricoh Digital Presses
Xerox Digital Press
Portable Spectrodensitometer
Macintosh Computers

FUTURE PRINTERS of America

SkillsUSA®

Graphic Communications - SkillsUSA National 2015

Technical Knowledge

Purpose

Technical Knowledge is an online assessment developed using competencies from the Introduction to Graphic Communications accreditation area of PrintED.

Contest development provided by Printing Industries of America.

PrintED/SkillsUSA Skill Connect Assessments competencies and are available in:

- Advertising and Design
- * **Graphic Communications**
- Screen Printing Technology
- Digital File Preparation/Digital File Output
- Offset Press Operations/Binding and Finishing

The online assessments test technical skills and knowledge through questions enriched with animations, videos, drawings and photographs. Assessments may be used as pre-assessments or post-assessments. Immediate grading and feedback is provided. Students who receive passing scores on these examinations receive student certifications imprinted with the PrintED, GAERF and SkillsUSA logos.

More Information **Websites**

GAERF (Graphic Arts Education and Research Foundation).....www.gaerf.org/

PrintED Graphic Communications List of Competencies
.....www.gaerf.org/PrintED/Competencies/IntroductiontoGraphicCommunications.aspx

To purchase PrintED/SkillsUSA Assessments..... www.workforcereadysystem.org

FUTURE PRINTERS of America

SkillsUSA®

Graphic Communications - SkillsUSA Nationals 2015

Oral Professional Assessment - Interview & Resume

Purpose

Oral Professional Assessment was developed to replicate the interviewing process. SkillsUSA contestants will answer questions provided by the interviewer (Judge) to the best of their ability.

Interview Process

Prior to Contest Day:

The contestant will submit a resume, which will be given to the judge prior to the contest. The contestant is given a list of positions, a description of a graphics company and questions that may be asked during the interview. The contestant can choose which position within the graphics company they wish to interview.

During the Interview:

After letting the Judge know which position they are applying for, the interview process will begin. The interview is 5-7 minutes long. There may be time at the end of the interview for the contestant to ask questions to the interviewer.

Judging Criteria Includes:

Poise, body language, verbal communications, professionalism of resume, and salesmanship.

FUTURE PRINTERS of America

SkillsUSA®

Oral Professional Assessment - Directions

You are applying for one of the following positions (your choice) at Three Lions Graphics near your hometown:

- Assistant bindery operator
- Customer service representative
- Digital press operator
- Graphic designer
- Marketing assistant
- Premedia technician
- Sales representative
- Sheetfed offset press feeder
- Web offset press rolltender

Company Description
Three Lions was founded in the early 1950's, started by Eddie Haskell as a small commercial printing company committed to putting the needs of his customers first and delivering the highest level of quality and service possible.

Haskell kept an eye on the future and invested in emerging technologies and services. Within 15 years, the company was positioned as a driving force in the regional printing industry. Susie Haskell became president in 1985, taking over from her father.

The business grew rapidly during the 1980's and 1990's. Almost three decades later, the Three Lions name is known and respected industry wide for abiding by and maintaining its founding tradition of excellence for the customers whom it serves.

Today, Suzie has taken Three Lions to new heights. Her ability to look beyond industry trends and set new ones has made her one of the most respected leaders in the printing industry. Her commitment to "beyond" cutting edge technology has positioned the company as an innovator in the changing world of digital media.

Today, Three Lions Graphics is a full service facility with capabilities ranging from premedia, printing, binding, mailing, fulfillment, and distribution. It operates 24 hours a day, seven days a week and produces a variety of award-winning printed media—direct mail, manuals, catalogs, magazines, and advertising collateral. The company has the latest in web offset, sheetfed offset, and digital printing technology. In 2012 Three Lions began offering mobile services—developing mobile apps and mobile-enhanced websites for its print customers. It also has a separate division that sells printed products via the Internet, producing with dozens of digital presses. The division boasts that jobs routinely go from on-line submission to its full-color digital presses in eight minutes or less.

Oral Professional Assessment - Directions

Interview Format/Questions

Your interview will be 5–7 minutes long with the human relations director of Three Lions Graphics. After letting him know which position you are applying for, he will ask you several questions from the following list. There may also be time for you to ask one question about the job or Three Lions, so be prepared with a question.

- How has your education and experience prepared you to work for our company?
- Tell me about your proudest achievement.
- Give me an example of how you were able to effectively resolve a conflict with a fellow student or employee?
- Tell me about a time that you experienced significant disappointment and how you reacted?
- Tell me about a time that you had to get buy in from others to accomplish a goal.
- What is the biggest compliment you have ever received from a teacher or manager?
- Describe how you would handle a situation if you were required to finish multiple tasks by the end of the day, and there was no conceivable way that you could finish them.
- What two positive character traits would your friends use to describe you? Which positive character traits do you still need to develop?
- In what ways would you be an asset to Three Lions Graphics?

Judging

Your interview will be judged in five 20-point categories:

- Poise—self-confident manner and composure during interview
- Body Language—body posture, gestures, facial expressions, and eye contact
- Verbal Communications—Ability to answer interview questions, clearly and concisely
- Professionalism of Resume—effective summary of skills/talents, appropriate organization/format, readability, and grammar/spelling
- Salesmanship—Ability to persuade interviewer of suitability for position

Each category will be scored in the following manner: Excellent = 20 points, Good = 15 points, Fair = 10 points, and Poor = 5 points.

Oral Professional Assessment - Directions

Position	Description
Assistant Bindery Operator	• Set up, adjust and operate a variety of auxiliary binding machines containing several cutting heads, control surfaces or other attachments (i.e. inkjet and mailing devices, case making & decorating equipment, folders, cutters, collators, stitchers, drills, and gluing machines) that can be combined with other equipment and devices to produce a complete bindery and finishing unit that processes printed sheets into final books, catalogs, manuals, directories, magazines or other completed products. • Inspect equipment for safety issues. • May assist with the setup and operation of saddle stitching and/or adhesive binding machines (perfect binders). • Make needed adjustments to coordinate the multiple work stations on a single machine. • Work with team leader and crew on all aspects of production. • Monitor and ensure necessary levels of quality and productivity.
Customer Service Representative	• Engage customers to gather job requirements and translate customer requirements into detailed manufacturing/kitting instructions and shipping/postal instructions. Offer suggestions to customers regarding workflow/process improvements to proposed jobs as appropriate. • Ensure information is accounted for and accurate before production begins. Ensure job instructions are entered and verified in the manufacturing system and added to the production schedule. • Communicate with customers during production process to keep them informed of the status of jobs, gather additional information as needed, and coordinate changes to jobs. • Forward/review proofs with customer and obtain approval of materials, such as artwork, color separations, or ink samples. • Coordinate the resolution of customer or manufacturing issues. Communicate with customers regarding the resolution of issues. • Monitor progress of jobs throughout production, confer with manufacturing operations on counts and final runs and ensure the final product meets customer requirements and company standards. • Gather information on work performed to assemble paperwork for billing purposes.
Digital Press Operator	• Operate inkjet and electrophotographic digital presses. • Review job instructions to prepare jobs for printing. • Set-up job requirements in digital front end (RIP). • Maintain daily print job production logs and daily delivery manifests. • Setup, program and release jobs from print queue. Adjust image position, perforations and folds on paper. • Monitor quality of job output for correctness and image quality. Ensure color consistency and accuracy according to customer requirements. • Order supplies such as ink, chemical solutions, blankets and rollers, paper, tabs and other items as needed. Maintain inventory levels.

Oral Professional Assessment - Directions

Graphic Designer	• Confer with customers and create designs, concepts, and sample layouts based that reflect excellent layout principles and design concepts and meet customer needs. • Determine size and arrangement of illustrative material and copy, and select style and size of type. • Use page layout, illustration, and image manipulation software to generate images and design files. • Prepare final layouts according to media requirements. • Review final layouts from outside designers and suggest improvements as needed. • Develop graphics and layouts not just for print, but also for mobile-enabled sites, websites, and other digital media. • Communicate instructions to CSR and/or production. • Review digital proofs for content and color. May require approving jobs on press.
Marketing Assistant	• Assist the marketing manager with marketing activities. • Assist and coordinate the production of a wide range of marketing communications. • Provide support for marketing events and exhibitions as required. • Assist with the writing and distribution of news releases and social media content. • Keep information on company website and social media sites up-to-date. • Monitor inquiries from website and social media sites and ensure timely and appropriate responses. • Perform research and update the customer and prospect databases.
Premedia Technician	• Review electronic files from clients and check them for thoroughness and completeness. • Use page layout software to manipulate the format of the print job to the dimensions of the paper. Account for folds, trims, bleeds and gripper, and add crop marks and color bars as necessary. • Identify missing or problematic components and communicate them to the CSR, customer, and/or production personnel. • Work directly with CSR, customer, and/or production personnel as necessary to work out any problems with the job. Load customer supplied electronic files for output, onto the prepress file server. • Prepare color proofs for customer review. Create manufacturing proofs. • Impose images and operate platemaking equipment (when jobs will be produced on our offset presses). • Perform quality checks on finished plates before releasing to manufacturing.
Sales Representative	• Develop a portfolio of customer accounts, selling print and marketing solutions that utilize the wide array of capabilities of Three Lions. • Use expertise in assessing a customer's marketing needs and the specific solutions that our company can provide. • Research and initiate contact with potential new customers. • Service and expand assigned accounts. • Maintain contact and account records. • Follow up on estimates and customer product inquiries. • Communicate job specification requirements accurately and timely to the CSR. • Facilitate and manage customer job approvals.

Oral Professional Assessment - Directions

Sheetfed Offset Press Feeder	• Ensure paper, ink, dampening solution, and other raw materials are loaded into press to supply a constant flow of materials while the equipment is running. • Make adjustments to equipment such as feeder mechanism based on the size of the paper. • Deliver equipment components such as plates or spray heads to the equipment for installation. • Recycle old/discarded plates. • Provide basic assistance as needed to makeready the equipment for operation. • Assist with retrieving plates, hanging plates and recycling/storing plates and other tasks associated with makeready of the press.
Web Offset Press Rolltender	• Load rolls of paper onto automatic splicing unit of web offset press. Inspect rolls of paper for blemishes or tears and cut away damaged area with knife. Roll paper into loading position on automatic splicer, insert shaft of automatic splicer through roll core, secure holding chucks of automatic splicer to shaft ends, and thread paper through press components to prepare press for printing. • Apply adhesive strip to backup roll and insert backup roll onto automatic splicing unit of press to prepare paper for automatic splicing. • Remove roll of leftover paper from press after automatic splicing. • May operate mechanical truck to transport rolls of paper to press area. • Assist with some of the makeready tasks associated with the type of press operated such as hanging plates, examining plates, prepping and installing blankets, adjusting tension, etc. • May clean press and clean and install press components to maintain press in working order.

Graphic Communications - SkillsUSA Nationals 2015

Oral Professional Assessment - Judges' Score Sheet

2015 SkillsUSA Oral Professional Assessment (total of 100 pts.)

Contestant #	Poise (20)	Body (20)	Verbal (20)	Resume (20)	Sales (20)	Total (100)	Comments
PostSecondary							
501							
502							
503							
504							

Secondary							
101							
102							
103							
104							
105							
106							
107							
108							
109							
110							
111							
112							
113							
114							
115							
116							
117							
118							
119							
120							
121							
122							

Description of Scoring Categories

Poise	Self-confident manner and composure during interview
Body Language	Body posture, gestures, facial expressions, and eye contact
Verbal Communications	Ability to answer interview questions clearly and concisely
Professionalism of Resume	Effective summary of skills/talents, appropriate organization/format, readability, and grammar/spelling
Salesmanship	Ability to persuade interviewer of suitability for position

Scoring per Category

Excellent	20
Good	15
Fair	10
Poor	5

Graphic Communications - SkillsUSA Nationals 2015

Production Planning

Purpose

Production Planning was developed to replicate the estimating and billing department(s) of the printing industry. SkillsUSA contestants solve math problems relating to time and materials needed to order materials and complete customers' jobs.

The contestant will solve a written production problem with results for cost justification between offset and digital printing.

Contest development provided by Printing Industries of America.

FUTURE PRINTERS of America

SkillsUSA®

Production Planning - Test

SkillsUSA would like to have 18,000 perfect bound books (17,250 printed on an offset press with a common cover sheet and 750 printed on a digital press with variable data on the cover sheet) with a finished size of 8.5" X 11". The book consists of 20 pages printed 2/2 (two colors on both sides) plus the cover printed 4/0 (four colors on one side only). The cover (front and back 4/0) will be trimmed to 11X17.128, providing 1/8" for the spine, which will be scored on the Baum folder.

750 books will have a personalized cover with variable data that will be printed on a digital press. The text weight stock and the cover stock for the 750 books will be printed on the digital press.

17,250 of the books will have a common cover that will be printed on an offset press. The text weight stock and common covers for the 17,250 books will all be printed on the offset press.

Equipment available to you will be as follows:
Heidelberg Anicolor 52 that can print a 14" X 20" sheet 4/0 or 2/2
Ricoh Digital Press that can print a 13" X 19.2" sheet 4/4
Xerox Digital Press that can print a 13" X 19.2" sheet 4/4
Baum-Cut 31.5 Paper Cutter (capable of a 4 sided trim with the sheet size used)
Baumfolder Baum 20 VFM
Rosback 882 PB (Perfect Binder)

Supplies needed for calculations
Paper Stock:
Cover stock: 12" x 18" parent sheet is $180 per thousand
Text weight stock: 11" x 17" parent sheet is $52.50 per thousand

The bindery usage will stay the same for all books. Do not account for waste or overages on any of the jobs as the equipment being used produces very little waste during set up and production.

Each answer is worth 3 points with an additional 6 points for showing your work totaling 75 points

Circle the correct answer below out of the multiple choice answers that are closest to your math

Production Planning - Test

Machine specs and additional pricing needed to calculate the production problem

Heidelberg Anicolor 52 four color perfector 2P2 Specs and Costs:

15,000 impressions (sheets) per hour actual production running speed
14" X 20" sheet size (Two 8.5" X 11" pages per side after trimmed)
Five minute make-ready time (set up time per job using 4 plates 4/0 or 2/2)
$12.00 per plate
$240.00 hourly press rate

Ricoh Specs and Costs:

$0.06 per click
$0.02 additional charges per click for variable data
$165.00 computer setup for variable data
Click charges are counted as one per side for the largest sheet size (1 or 4 colors)

Xerox Specs and Costs:

$0.06 per click
$0.02 additional charges per click for variable data
$165.00 computer setup for variable data
Click charges are counted as one per side for the largest sheet size (1 or 4 colors)

Baum-Cut 31.5 Specs and Costs:

800 Sheets of text stock can be cut in one lift
One minute per lift to trim out text weight stock (one cut)
500 Sheets of cover stock can be trimmed in one lift
Two minute per lift to trim out cover stock (two min = four sided trim)
$90.00 hourly cutter rate

Baumfolder Baum 20 VFM (for scoring the cover only)

9,000 sheets per hour run rate
5 minute make-ready time
$60 hourly folder/scoring rate

Rosback 882 PB (Perfect Binder)

500 books per hour
15 minute make-ready time
$120 hourly Perfect Binder rate

Contestant Number _____

Production Planning - Test (3 of 5 pages)

1. How many plates will be needed to run both the text weight pages and cover page on the offset press?

a. 11 b. 5 c. 44 d. 24 e. 22

2. How much will the plates cost to run the entire offset portion of the job?

a. 528 b. 288 c. 60 d. 264 e. 132

3. How many sheets will be needed to run cover stock on the **offset press**?

a. 17,250 b. 18,000 c. 750 d. 18,750 e. 6,500

4. How much will the cover stock cost for the job printed on the **offset press**?

a. 905 b. 3,240 c. 9,450 d. 32,400 e. 3,105

5. How much will the total hourly run rate, including make-ready time, cost to run the cover stock on the **offset press**?

a. 200 b. 308 c. 296 d. 276 e. 356

6. How many sheets will be needed to run the text weight stock on the **offset press**?

a. 97,250 b. 86,250 c. 103,500 d. 43,125 e. 90,000

7. How much will the text weight stock cost for the job printed on the **offset press**?

a. 4,528.13 b. 5,105.63 c. 4,533.75 d. 4,725 e. 2,264.07

8. How much will the total hourly run rate, including make-ready time, cost to run the text weight stock on the **offset press**?

a. 1,400 b. 1,425 c. 1,440 d. 1,480 e. 1,500

9. How much will the text weight stock cost for the job printed on the **digital press**?

a. 208.88 b. 675 c. 196.88 d. 192.40 e. 211.40

Contestant Number _____

Production Planning - Test (4 of 5 pages)

10. How much will the click charges be to print the text weight on the **digital press**?

a. 225 b. 450 c. 390 d. 165 e. 300

11. How much will the cover weight stock cost for the job printed on the **digital press**?

a. 1,039.37 b. 139.37 c. 1035 d. 135 e. 232.50

12. How much will the click charges be including all variable data costs to print the covers on the **digital press**?

a. 210 b. 90 c. 225 d. 255 e. 60

The job will now go to the bindery department where the pages will be cut, scored, collated, and perfect bound creating a book.
The text weight stock will be cut down to 8.5" X 11" from an 11" X 17" sheet.
The cover will be trimmed down to 11" X 17 1/8" sheet from the parent sheet size of 12" X 18".
The covers will then be scored on the folder and then completed on the perfect binder.
The finishing process is the same for both offset and digital work (18,000 perfect bound books).

13. How much time is required to trim the cover stock for both offset and digital combined?

a. 69 min b. 22.5 min c. 36 min d. 45 min e. 72 min

14. How much will it cost to cut the cover stock for both offset and digital combined?

a. 216 b. 90 c. 108 d. 216.50 e. 123

15. How much time is required to cut the text weight stock for both offset and digital combined?

a. 1.88 hours b. 1.98 hours c. 1.99 hours d. 1.78 hours e. 2.08 hours

16. How much will it cost to cut the text weight stock for both offset and digital combined?

a. 160.02 b. 179.10 c. 178.20 d. 187.20 e. 168.75

17. How long will it take to score the cover stock including make-ready time for both offset and digital combined?

a. 2 hours b. 2.08 hours c. 3.08 hours d. 3 hours e. 1.08 hours

18. How much will it cost to score the cover stock including make-ready time for both offset and digital combined?

a. 250 b. 125 c. 184.80 d. 180 e. 64.80

Contestant Number _____

Production Planning - Test (5 of 5 pages)

19. How long will it take to perfect bind the books including make-ready time for both offset and digital combined?

a. 34.5 hours b. 34.75 hours c. 1.75 hours d. 36.25 hours e. 36 hours

20. How much will it cost to perfect bind the books including make-ready time for both offset and digital combined?

a. 4,350 b. 210 c. 4,320 d. 4140 e. 4170

21. How much is the total cost to produce the entire job (18,000 books)?

a. 15375.75 b. 15,059.75 c. 15,455.75 d. 15,320.75 e. 15,575.55

22. The total cost to produce the 17,250 books printed on the **offset press** is $14,250.89. How much will this process cost per book?

a. 1.21 b. 1.61 c. 0.79 d. 1.42 e. 0.83

23. The total cost to produce the 750 digitally produced books with variable data is $1,204.86. How much will this process cost per book?

a. 0.79 b. 0.83 c. 0.79 d. 1.61 e. 1.21

24. BONUS POINTS FOR SHOWING YOUR WORK IS WORTH 6 POINTS

_____

Total _____ Contestant Number _____

Graphic Communications - SkillsUSA Nationals 2015

Production Planning - Test Answer Key (1 of 3 pages)

Contestant Number _____

1. How many plates will be needed to run both the text weight pages and cover page on the offset press?

d. 24 a. 11 b. 5 c. 44 d. 24 e. 22

2. How much will the plates cost to run the entire offset portion of the job?

b. 288 a. 528 b. 288 c. 60 d. 264 e. 132

3. How many sheets will be needed to run cover stock on the **offset press**?

a. 17,250 a. 17,250 b. 18,000 c. 750 d. 18,750 e. 6,500

4. How much will the cover stock cost for the job printed on the **offset press**?

e. 3,105 a. 905 b. 3,240 c. 9,450 d. 32,400 e. 3,105

5. How much will the total hourly run rate, including make-ready time, cost to run the cover stock on the **offset press**?

c. 296 a. 200 b. 308 c. 296 d. 276 e. 356

6. How many sheets will be needed to run the text weight stock on the **offset press**?

b. 86,250 a. 97,250 b. 86,250 c. 103,500 d. 43,125 e. 90,000

7. How much will the text weight stock cost for the job printed on the **offset press**?

a. 4,528.13 a. 4,528.13 b. 5,105.63 c. 4,533.75 d. 4,725 e. 2,264.07

8. How much will the total hourly run rate, including make-ready time, cost to run the text weight stock on the **offset press**?

d. 1,480 a. 1,400 b. 1,425 c. 1,440 d. 1,480 e. 1,500

9. How much will the text weight stock cost for the job printed on the **digital press**?

c. 196.88 a. 208.88 b. 675 c. 196.88 d. 192.40 e. 211.40

10. How much will the click charges be to print the text weight on the **digital press**?

b. 450 a. 225 b. 450 c. 390 d. 165 e. 300

Production Planning - Test Answer Key

11. How much will the cover weight stock cost for the job printed on the **digital press**?

d. 135 a. 1,039.37 b. 139.37 c. 1035 d. 135 e. 232.50

12. How much will the click charges be including all variable data costs to print the covers on the **digital press**?

c. 225 a. 210 b. 90 c. 225 d. 255 e. 60

The job will now go to the bindery department where the pages will be cut, scored, collated, and perfect bound creating a book.
The text weight stock will be cut down to 8.5" X 11" from an 11" X 17" sheet.
The cover will be trimmed down to 11" X 17 1/8" sheet from the parent sheet size of 12" X 18".
The covers will then be scored on the folder and then completed on the perfect binder.
The finishing process is the same for both offset and digital work (18,000 perfect bound books).

13. How much time is required to trim the cover stock for both offset and digital combined?

e. 72 min a. 69 min b. 22.5 min c. 36 min d. 45 min e. 72 min

14. How much will it cost to cut the cover stock for both offset and digital combined?

c. 108 a. 216 b. 90 c. 108 d. 216.50 e. 123

15. How much time is required to cut the text weight stock for both offset and digital combined?

a. 1.88 hours a. 1.88 hours b. 1.98 hours c. 1.99 hours d. 1.78 hours e. 2.08 hours

16. How much will it cost to cut the text weight stock for both offset and digital combined?

e. 168.75 a. 160.02 b. 179.10 c. 178.20 d. 187.20 e. 168.75

17. How long will it take to score the cover stock including make-ready time for both offset and digital combined?

b. 2.08 hours a. 2 hours b. 2.08 hours c. 3.08 hours d. 3 hours e. 1.08 hours

18. How much will it cost to score the cover stock including make-ready time for both offset and digital combined?

b. 125 a. 250 b. 125 c. 184.80 d. 180 e. 64.80

19. How long will it take to perfect bind the books including make-ready time for both offset and digital combined?

d. 36.25 hours a. 34.5 hours b. 34.75 hours c. 1.75 hours d. 36.25 hours e. 36 hours

Production Planning - Test Answer Key (3 of 3 pages)

20. How much will it cost to perfect bind the books including make-ready time for both offset and digital combined?

a. 4,350 a. 4,350 b. 210 c. 4,320 d. 4140 e. 4170

21. How much is the total cost to produce the entire job (18,000 books)?

c. 15,455.75 a. 15375.75 b. 15,059.75 c. 15,455.75 d. 15,320.75 e. 15,575.55

22. The total cost to produce the 17,250 books printed on the **offset press** is $14,250.89. How much will this process cost per book?

e. 0.83 a. 1.21 b. 1.61 c. 0.79 d. 1.42 e. 0.83

23. The total cost to produce the 750 digitally produced books with variable data is $1,204.86. How much will this process cost per book?

d. 1.61 a. 0.79 b. 0.83 c. 0.79 d. 1.61 e. 1.21

24. BONUS POINTS FOR SHOWING YOUR WORK IS WORTH 6 POINTS

_____

Total _____ Contestant Number _____

Graphic Communications - SkillsUSA National 2015

Digital Workflow

Purpose

Digital Workflow was developed to replicate employment within the prepress department of a printing company. SkillsUSA contestants are instructed to duplicate a customer's layout(s). Software used is Adobe cc. All Images for the layout(s) are provided in a folder.

The contestant then preflights the job and reviews the overall quality of the file. The completed file is saved to a storage device and then output on a Xerox Digital Press where the contestant will view a proof of the final product.

Contest development provided by RR Donnelley.

FUTURE PRINTERS of America

SkillsUSA®

Digital Workflow - Directions for Contestant

Follow these basic steps and sample layouts to create the cover and page files for this project.

- Covers and pages will print in 4-color process. Covers will bleed .125 all four sides.
- If you are not clear about one of the steps, just do your best to make it look like the sample.
- Remember to save often.

You may write on this sheet, but do not remove from testing area.

Body Pages Instructions:

❒ 1. Create a new four page InDesign document, 8.5” wide and 11” tall.

❒ 2. Click on Facing Pages.

❒ 3. Set the margins to .5”

❒ 4. Save document as “*Contestant-number*”_Body.

❒ 5. Center each of the four pages of 1 GC_Entire Contest Overview 2014.pdf into the four pages of the InDesign document in order.

❒ 6. Create a PDF/X-1a:2001 PDF with .125” bleed, crop and bleed marks with a .125” offset.

Cover set-up instructions:

❒ 1. Launch InDesign. Create a new single page document, 17” wide by 11” tall. Do not check facing pages. Make 2 columns, with a ½” gutter. Set margins at ¼” all around. Project is an 8 ½” x 11” trim, saddle wire bind. Cover size is 2 x trim (no spine). You will be building the front and back covers on this 17” width. Front cover occupying 8 ½” x 11” of it and the back cover the other 8 ½” x 11” of the document. A guide line at 8.5” will help you separate the front cover from the back cover. Reminder, you will have outside front and back covers to create, as well as inside front and back covers.

❒ 2. Save document as, “*Contestant-number*”_CVR.

❒ 3. Create Process color: 65C 25M 0Y 0K; named Background Blue.

Outside Front Cover Instructions:

❒ 1. Create full page box and fill with Background Blue color. Set bleed accordingly.

❒ 2. Place “**SkillsUSA 50 slogan 1c.eps”** at 155%. Position 1/2” from top and 1/2” from front. Create drop shadow in screen mode, 35% opacity, distance .1375, 135 angle, X and Y offsets .0972 and size .0694

Digital Workflow - Directions for Contestant

❒ 3. Create box at 3 ¾" x 1 ¼". Import image "**Graphic_Communication.jpg"** into it at 45%. Position image in box per sample layout. Angle box and image at 45 degrees. Position ¼" from top and spine/back. Create drop shadow with multiply blend and 35% opacity. 90 degree angle and .125 Y offset. Option size 1/16", object knocks out.

❒ 4. Place image "**The_Winners_Are.jpg**" at 60% in a 8" x 4" box. Position box 3 3/8" from top and centered side to side. Create directional feathered edges at 3/8" all around. No other effects.

❒ 5. Create text box 7 5/8" from top and ¼" from spine and import text document "**FC_Text**" into it. Or type set it yourself using the sample layout for guidance. Set header type at 30pt Gills Sans Ultra Bold. The main text at 18pt Minion Pro. And the "Thanks" at 18pt Noteworthy. 7/16" space between the header type and main type. Note, there are 3 errors in the imported text to be found and corrected.

❒ 6. Place "**mule.psd**" image at 30%, ¼" from bottom and 3/8" from front.

❒ 7. Set text wrap on mule image and format text to match sample layout.

Outside Back Cover Instructions:

❒ 1. Create 2" Blue bar at top of page. Use same blue as the front cover background. Set bleed accordingly.

❒ 2. Set type per sample layout starting at 3/8" from top and ½" from edge. "Thanks" is 36pt Noteworthy. All other type is 30pt Minion Pro. Once all logos are placed, format text to match sample copy.

❒ 3. Place **center column** logos with first logo centered on page and starting ¼" from blue bar. All logos thereafter are to be placed a ½" apart and centered one under the other. Logo names in the order they fall and percentage to place them is:

1) **HD_4C_M.EPS** -75%
2) **rrdonnelleylogo_wht.jpg** – 30%
3) **NCPIC Logo (color no background)(2).eps**- 100%
4) **GAERF-4c.tif** – 60%
5) **photo3700_orig.tif** – 60%
6) **Ferris_Box_Flame_Stacked_Wordmark_2012.eps** – 25%
7) **William D Ford Logo 2014 Vector pms129.psd** – 25%
8) **quadlogo_medium.tif** – 100%.

Digital Workflow - Directions for Contestant (3 of 4 pages)

❒ 5. Left side column logo placement starts with top logo, **ISD917-CTE Logo.tif** – 60%, positioned 1 5/8" from top and 3/8" from left edge. The ensuing logos are then placed evenly spaced with the bottom logo ending at ¼" from bottom. Logos are to be centered with one another top to bottom. The equal spacing doesn't need to be perfect, eyeballing will do. Logo names in the order (top to bottom) they fall and percentage to place them is:

1) **ISD917-CTE Logo.tif** – 60%
2) **Baum logo small.tif** – 100%
3) **PC_Logo.jpg** – 50%
4) **PrIndAm_Mktg_Logo_HiRes.jpg** – 50%.

❒ 6. Right side column logo placement starts with first logo, **Saline_hornet_vector.eps** – 50%, positioned from wing tips 5/8" from top and 1/4" from spine. The ensuing logos are then placed evenly spaced with the bottom logo ending at ¼" from bottom. Logos are to be centered with one another top to bottom. Except the Pittsburgh logo, it will be ¼" from spine. The equal spacing doesn't need to be perfect, eyeballing will do. Logo names in the order they fall (top to bottom) and percentage to place them is:

1) **Saline_hornet_vector.eps** – 50%
2) **fpalogoByrd 6_14-lg.png** – 40%
3) **xer_3ln_r_cmyk.eps** – 55%
4) **PSU_GIT Dept Block-01.jpg** – 50%
5) **Pkr Color HvyE 185 u[Converted].eps** – 100%.

Inside Front Cover Instructions:

❒ 1. Add second page.

❒ 2. Create 2" Background blue bar across top of page. To be extended across inside back cover as well. Adjust for bleed accordingly.

❒ 3. Place Skills logo, "**SkillsUSA 50 slogan 1c.eps**", at 95%, ¼" from top and front edge.

❒ 4. Create an 8 ½" x 4" picture box abutting the blue bar and import the "**Gangs_all_Here.jpg**" image into it at 52%. Position per provided copy. Adjust for bleed accordingly.

❒ 5. The bottom four images are in a 4 ¼" x 2 ½" picture box abutting each other and are placed as such:

1) Top row, left to right: **Baum_Kids_Fold.jpg** at 35% and **MacHelp.jpg** at 35%.
2) Bottom row, left to right: **FlatCut.jpg** at 30% and **Questions.jpg** at 35%.

Position per copy. Adjust for bleed accordingly.

❒ 6. Place a 4 pt white divider bar between all picture boxes as seen in copy.

Digital Workflow - Directions for Contestant

Inside Back Cover Instructions:

❒ 1. If you didn't extend blue bar from inside front cover across the inside back cover, do so now. Or create a 2" Background blue bar across top of cover.

❒ 2. Place Skills logo, "**SkillsUSA 50 slogan 1c.eps**", at 95%, ¼" from top and back edge.

❒ 3. Set type per copy, using 24 pt Minion Pro for the main text and 30 pt Noteworthy for the "Thanks". Start type 3/8" from gutter and top.

❒ 4. Create six picture boxes at size 4 ¼" x 3". Place them two across and three down, abutting the blue bar and each other.

❒ 5. In the picture boxes, import images as noted.

1) Top row left to right: **HeidelbergCrew** at 30% and **DonnelleyCrew** at 70%.
2) Center row left to right: **The_Interview** at 30% and **Folder_Instructions** at 45%.
3) Bottom row left to right: **Ricoh** at 30% and **Xerox** at 50%.

Position per copy. Adjust for bleed accordingly.

❒ 6. Place a 4 pt white divider bar between all picture boxes as seen in copy.

Once complete, Preflight files for printability. Check that all images are CMYK or grayscale, bleeds are sufficient and spot colors are printing CMYK.

Create a PDF/X-1a:2000 PDF, with bleeds, of both inside and outside covers.

Clean up swatches and Package your documents and arts/images to a folder named with your competition number. Include the PDFs in this package.

Graphic Communications - SkillsUSA Nationals 2015

Digital Workflow - Final Design Sample

Actual size of layout is 11x17 with a single fold

Cover - Outside (Back / Front)

Cover - Inside

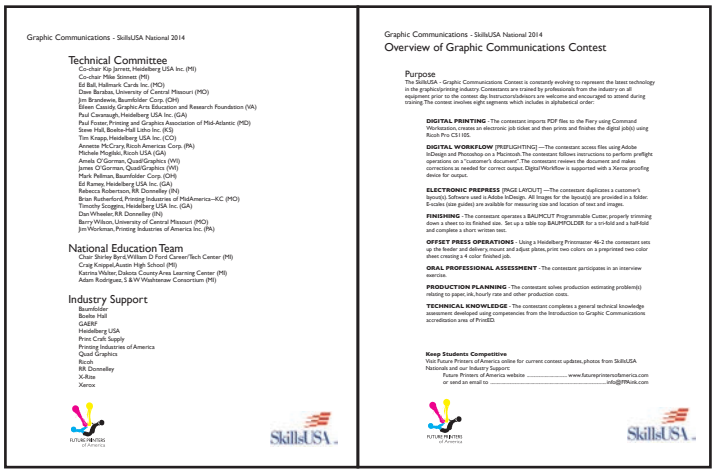

Inside Pages

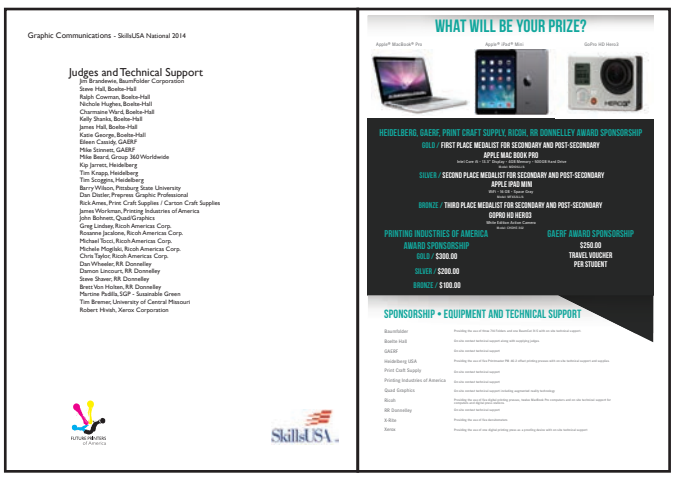

Inside Pages

Graphic Communications - SkillsUSA Nationals 2015

Digital Workflow - Judges' Score Sheet (1 of 2 pages)

Contestant Number _____

SkillsUSA 2015 Digital Workflow

Content Creation _____ (184 points possible)

Document Setup	missed
Trim size correct (4 pts)	____
Document bleed set correctly (4 pts)	____
Cover page orientation/layout (4 pts)	____
Cover file named per instructions (4 pts)	____
Body pages positioned per instructions (4 pts)	____
Background Blue setup correctly (4 pts)	____
FC blue panel, back cover blue bar setup correctly (4 pts)	____
IFC/IBC blue bar setup correctly (4 pts)	____
Interior: Page size and margins (4 pts)	____

Typesetting	missed
FC_Text imported/typeset (6 pts)	____
FC main header in 30 pt Gill Sans Ultra Bold, 100K (4 pts)	____
FC "Thanks" in 18 pt Noteworthy (4 pts)	____
Text wrap around FC "mule.psd) (4 pts)	____
BC typeset in 30 pt Minion Pro (6 pts)	____
BC "Thanks" in 36 pt Noteworthy (4 pts)	____
IBC typeset in 24 pt Minion Pro, placement correct (6 pts)	____
No type overflows (2 pts)	____
FC typos corrected (4 pts)	____

Layout/placement	missed
OFC: SkillsUSA 50 placed (5 pts)	____
OFC: SkillsUSA 50 drop shadow (5 pts)	____
OFC: Graphic Communications box placed correctly (4 pts)	____
OFC: Graphic Communications drop shadow (5 pts)	____
OFC: The Winners Are placed – note layering w/ gray box (3 pts)	____
OFC: The Winners Are feathering (5 pts)	____
OBC: Left column logos placed and scaled correctly (12 pts)	____
OBC: 917 logo silhouetted (5 pts)	
OBC: Center column logos placed and scaled correctly (12 pts)	____
Interior: Page placement (5 pts)	____

Layout/placement (continued)	missed
OBC: Right column logos placed and scaled correctly (12 pts)	____
IFC: SkillsUSA 50 logo placed (5 pts)	____
IFC: Group photo placed (5 pts)	____
IFC: Four bottom photos placed (5 pts)	____
IFC: White divider rules placed (5 pts)	____
IBC: SkillsUSA 50 placed (5 pts)	____
IBC: Six images at bottom place (5 pts)	____
IBC: White divider rules placed (5 pts)	____

Deliver to Print and Print___ (116 points possible)

Document Packaging	missed
Saved to correct location/file name (5 pts)	____
All necessary files included (5 pts)	____
Directory structure well organized (4 pts)	____
PDF/X-1a:2000 file conformance (4 pts)	____
Preflight info included with files (4 pts)	____

Document Structure and Geometry	missed
Correct bleed allowance in doc(5 pts)	____
Bleed elements extended to bleed (5 pts)	____
Appropriate marks outside page (5 pts)	____
Trim marks accurate for size (2 pts)	____
Spreads butt without gaps/overlap (5 pts)	____

Colors	missed
Colors in palette correct builds (8 pts)	____
All elements in CMYK colors (10 pts)	____
Overprints/knockouts appropriate (5 pts)	____

Images	missed
Low res images detected/fixed (4 pts)	____
Image color spaces correct (4 pts)	____
Drop shadows reproduce well (8 pts)	____
No problems from layering or transparencies (8 pts)	____

Fonts	missed
All fonts embedded (4 pts)	____
Fonts NOT subsetted (1 pts)	____

Digital Output	
Proper output and fold (20 pts)	____

Total Points Possible: 300 Less points missed _____ Final Score _____

Digital Workflow - Judges' Score Sheet (2 of 2 pages)

Contestant Number _____

Judges Comments (optional)

Overall Appearance _____

Execution _____

Methodology and Organization _____

Total Points Possible: 300 Less points missed _____ Final Score _____

Graphic Communications - SkillsUSA Nationals 2015

Digital Press - Equipment: Ricoh Pro C5110S

Purpose

Digital Press Operations is designed to replicate employment within a corporate Centralized Reproduction department or a traditional commercial printer that uses digital printing technologies as part of their offerings.

SkillsUSA contestants retrieve PDF files from a folder on a Macintosh computer. Paper stock is pre-loaded in the printer and the Paper Catalog is already set up. Job ticketing instructions are provided in this guide. SkillsUSA contestants import the files into the Fiery using Command Workstation. Once the files are imported, the contestants create an electronic job ticket and correctly print and finish the file using the digital press.

Digital jobs include variable data files and a correct version of the magazine cover that was recreated in the Digital Workflow section of the contest.

Contest development provided by Ricoh.

FUTURE PRINTERS of America

SkillsUSA®

Digital Press - Objective

Objective:

Correctly import, job ticket and print three digital files.

The contestant will be given three (3) opportunities to correctly print three (3) jobs. This gives the contestant an opportunity to print a job that might not print correctly, make any necessary changes and reprint the job correctly. If more than three attempts are required to print the job correctly, the contestant will lose 1 point for every additional attempt. A maximum of five (5) attempts will be allowed for the competition.

All jobs will need to be submitted to the judge. Contestants will write their contestant number on the front of each job.

The contestant will have 50 minutes to produce the three jobs and answer the questions at the end of the assessment. No additional points are given for finishing early.

Digital Press - Job Descriptions (1 of 2 pages)

Job 1—Rock, Paper, Scissors Job Description: This job is an 8 ½ x 11 book that requires duplex printing with a dual staple at the top of the book. Print landscape and staple on the long edge.	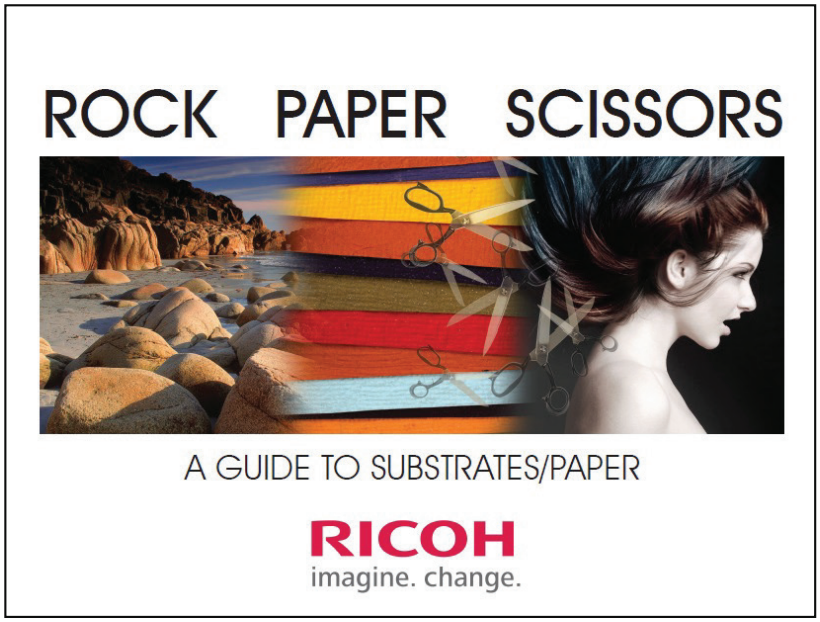
Job 2—A Brief History of Print Job Description: This job consists of 4 8 ½ x 11 pages The pages need to be imposed as a newsletter and printed on 11 x 17 paper.	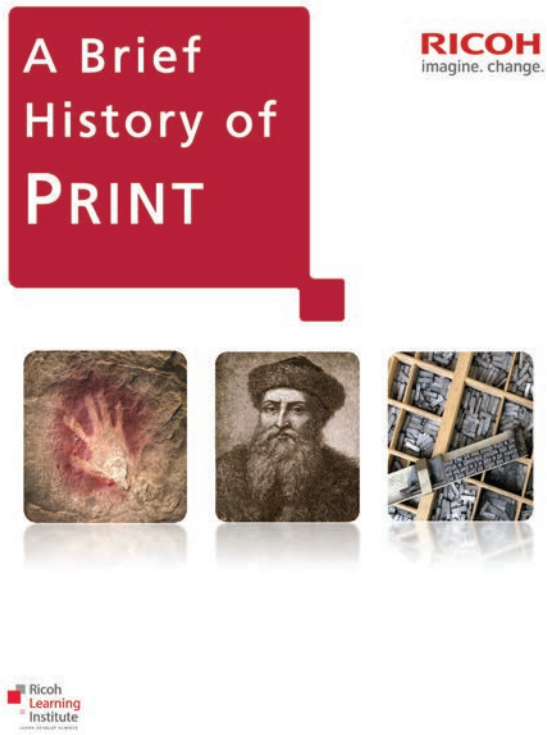

Graphic Communications – SkillsUSA National Conference 2015

Job 3—Variable Data Postcards Job Description: This job consists of postcards that were created in Fusion Pro and contain variable data. This job needs to be imposed multi-up so that it can be cut and ready for mailing.	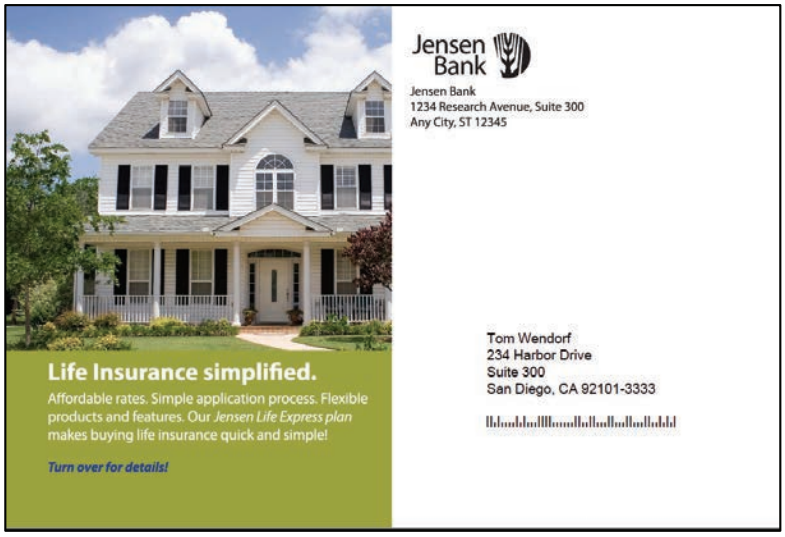

Digital Press - Directions

Job 1 Procedures:

Objective: Create a duplex (two-sided) book using the paper catalog for paper select. The job should be finished in-line with two staples on the top (long) edge.

Jobs are located in the folder on the computer thumbdrive called **2015 SkillsUSA Competition Files.**

Import the **01-RockPaperScissors.pdf** file into the Fiery HELD queue either by **dragging and dropping** or using the Fiery's **File>Import Job** steps covered in the training.

Once the job appears in the Held queue, right-click on the job and select **Properties**.

Once the Job Properties window opens you will need to program the job for printing as follows:

- **Paper/Media:** Hammermill 24# Color Copy 8.5 x 11
- **Copies:** 2 sets
- **Layout:** Duplex Open to Top
- **Finishing:** Staple 2 at Top

Review your job and submit it for printing.

You should see your job in green in the Processing Pane just above the Queue pane. Once the job is finished processing you should see your job printing in green in the Printing Pane. The blue light on the Pro C5110S will turn on while your job is printing.

Retrieve your final output. Write your name(s) on the top of one copy of the output. Keep the other sets as sample jobs. Turn in the job with your Contestant Number on it along with Jobs 2 and 3 and your score sheet.

Job 2 Procedures:

Objective: Create a four page imposed document using the Fiery print driver and print on 11 x 17 gloss paper.

Import the **02_A Brief History of Print.pdf** file into the **HELD** queue.

Right-click on the job and select **Properties**. Once the Job Properties window opens you will need to program the job for printing as follows:

- **Paper/Media:** Hammermill 24# Color Copy 11 x 17
- **Copies:** 2 sets
- **Layout:** Booklet
- Scroll down to the Cover section of the dialog box.
  Click on the down arrow for Content input. Select **Front & Back Separately**. For Front Cover select **Print on both sides**. For Back Cover select **Print on both sides**.

Review your job and submit it for printing.

You should see your job in green in the Processing Pane just above the Queue pane. Once the job is finished processing you should see your job printing in green in the Printing Pane. The blue light on the Pro C5110S will turn on while your job is printing.

Retrieve your final output. Write your Contestant Number on the top of one copy of the output. Keep the other sets as sample jobs. Turn in the job with your Contestant Number on it along with Jobs1 and 3 and your score sheet.

Digital Press - Directions (3 of 4 pages)

Job 3 Procedures:

Objective: Create a variable data postcard job that is imposed and ready for cutting and mailing.

Import the **03_JensenBank VDP.pdf** file into the **HELD** queue.

Right-click on the job and select **Impose**. If you get a window asking if you want to use the Demo Mode, select Yes.Once the Impose window opens you will need to program the job for printing as follows:

- Gangup
- Cut and Stack
- **Sheet:** 11 x 17 (You will select Edit… and next to **Media**, select Choose from Paper Library. You can then select Tray 2 with the 11 x 17 paper).
- **Duplex:** Open to Left
- Layout Orientation: Landscape
- Row & Column: 2 x 2
- **Scaling:** Scale to Fit
- **Marks:** Define . . . and put a check mark in the box next to Print trim marks
- Close Impose
- Save the Job Name with your Contestant Number (Example: 1234.dbp)
- Print your job

You should see your job in green in the Processing Pane just above the Queue pane. Once the job is finished processing you should see your job printing in green in the Printing Pane. The blue light on the Pro C5110S will turn on while your job is printing.

Digital Press - Directions

Retrieve your final output. Write your Contestant Number on the top of the first page of the output. Keep the other pages as sample jobs. Turn in the job with your Contestant Number on it along with Jobs1 and 2 and your score sheet.

Digital Press - Questions

Answer the following questions

Scenario

You are working for Midwest Graphics and Digital Print. Midwest is trying to become more digitally oriented but has still opts for traditional offset for some jobs. Midwest's owner came to you to determine if they should attempt to produce a recurring mail piece digitally on the new Ricoh device. The owner gave you input data about costs, machine capabilities, outside vendors [mail houses] etc. Your task is to analyze the situation and data and recommend a course of action regarding the best way to produce the job. The job specifications are:

- 16,000 finished post cards. 4 different versions [4000 each version]
- Finished size is 4.25"x5.5" No Bleed, 4 color over 1 color [you can yield 4 cards from 1 8.5x11 sheet] The stock is 80lb coated cover
- Each card gets a unique name imprinted [addressee]
- Cards must be sorted by zip code before delivery to post office.

Offset Costs:

- $250 BHR to print multiple up on a 40" sheet [no mailing list names imprinted]; Estimate time to complete is 2 hours
- $50 to cut cards for mailing house
- $20 cost to deliver cards to mail house
- $150 cost for mail house to imprint and sort 16,000 names
- $20 cost to deliver to post office
- Time to produce job – 5 working days

Digital Press - Questions

Digital Costs

- $370 to produce the job on the Ricoh device [4 up on 8.5”x11” on card stock, with names imprinted
- $35 to cut cards to size and break out into correct zip codes
- $20 to deliver to post office
- Time to produce job – 4 working days

Questions

1. What is the total cost to produce the job on offset?

_____

_____

_____

_____

2. What is the total cost to produce the job on the Ricoh equipment?

_____

_____

_____

_____

Digital Press - Questions (3 of 3 pages)

Digital and Offset Compare/Contrast

1. List two technical differences between digital and offset printing.

_____

_____

_____

2. List two technical similarities between digital and offset printing.

_____

_____

_____

Digital and Offset Applications

1. List two applications (types of jobs) where digital is typically more efficient than offset.

_____

_____

_____

2. List two Fiery capabilities / features that automate workflows.

_____

_____

_____

Graphic Communications - SkillsUSA Nationals 2015

Digital Press - Judges' Score Sheet

_____

Contestant Number

Task (Points Value)	Points Earned
Printing Job 1 2-Sided Printing 8 ½ x 11 Gloss Paper Stock Dual Stitching—2 at left 4 copies of the job (30points)	
Printing Job 2 Using Booklet function in Fiery 11 x 17 correctly impose and document print 4 copies of the job (30 points)	
Print Job 3 Using the Impose function in the Fiery, correctly impose the postcards so they are properly laid out front to back. Print trim marks 1 set of all postcards (40 points)	
Final Questions Scenario (20 points) Question 2 (20 points) Question 3 (20 points)	
Total Possible Points (160 points)	

Graphic Communications - SkillsUSA Nationals 2015

Offset Press - Equipment: Heidelberg Printmaster QM 46-2

Purpose
Offset Press replicates employment within the press department of a printing company.

Operate Offset Press - Single Color Run:
SkillsUSA contestants are responsible to operate a Heidelberg Printmaster 46 press, to print a single color logo onto the preprinted job. The contestant will be required to setup the feeder and delivery, install a plate, register a single color logo into the correct position to create a job on an offset press.

Written / Printing Issues Identification:
In addition to operating the press, the contestant will be provided with preprinted material, which they will examine and identify printing issues (flaws) and take density readings.

Contest development provided by Heidelberg.

FUTURE PRINTERS of America

SkillsUSA®

Offset Press - Objective and Directions

Objective:

Complete offset press operations by imprinting a single color logo on a pre-printed 4 color sheet

Competitors will be given one plate to complete the final imprint color on a four color job. The plate will need to be mounted on the press. The feeder and delivery will need to be set up to feed and deliver 11" x 17" 80 lb. text. The image will need to be printed and registered to the preprinted sheet.

The competitor will be given one stack of preprinted paper for the job. The job will need to be set up using the least amount of sheets as possible. Only 75 quality sheets will be accepted for judging the completed job. Every 3 sheets equal 1 point for a maximum total of 25 points.

All sheets are to be submitted to the judge (Good, Bad, and unprinted sheets). Include competitor number with each job. **The completed job is to be left in the delivery of the machine.**

Plate will need to be ejected from the machine. Once this is completed the blanket will need to be cleaned along with making sure the area is clean.

The competitor will be judged on press make-ready, set up of feeder and delivery, registration to the preprinted sheet, quality of printed sheets, knowledge of the printing process, and clean-up of work area. Student will also be judges on knowledge of print issues from preprinted samples showing flaws.

55 total minutes are given to complete this project 27 minutes on press. No additional points are given for finishing early.

For the safety of the operator and the machine, asking a judge where an adjustment knob is on the machine is allowed. The judge cannot make any adjustments for the competitor without penalty.

Safety first, the judge may shut down and disqualify a contestant for any unsafe practices. This decision must be made and agreed upon by two judges.

Points will be decided as follows per job:
Feeder (18) - Delivery (9) - Skew (5) - Lateral (5) - Circumferential (5) - Impression (5) – Ink sweep (5) – Finished sheets produced (25)
- Overall Quality of finished product (10) - knowledge (5)
- Clean up & Safety (3) – Bonus points for above standards (5) Identifying print issues (50)
Total possible points equal 150 points

Graphic Communications - SkillsUSA Nationals 2015

Offset Press - Sample of Press Run

Preprinted Stock (Magazine Cover) two sided
Actual size of layout is 11x17

Single Color Logo that contestants are responsible to print on preprinted Magazine Cover.

Graphic Communications - SkillsUSA Nationals 2015

Offset Press - Judges' Score Sheet for Press Run

_____
Contestant Number

Feeder (18)(3pt each) _____
side guides - back stop - suckers - pile height
- air/vacuum - double sheet detector

Delivery (9) _____
Back stop – table height – use of front jogger

Printing unit 1

Skew pu1(5) _____

Lateral pu1(5) _____

Circumferential pu1(5) _____

Ink Sweep pu1 (5) _____
Pu1

Impression (5) _____

Finished sheets produced _____
(25 possible points)(3 sheets equals 1pt up to 75 sheets)
Only Half points will be given for consistent bad sheets

Overall Quality (10 IS THE JOB SELLABLE) _____

Knowledge (5) _____
General knowledge of the printing process while operating the machine

Clean Up/Safety (3) _____

Bonus points for above standards (5) _____

Total possible points equals 100 points **Total** _____

Graphic Communications - SkillsUSA Nationals 2015

Offset Press - Judges' Score Sheet for Written / Printing Issues Identification

_____
Contestant Number

Sheet A (10) _____

Sheet B (10) _____

Sheet C (10) _____

Sheet D (10) _____

Sheet E (10) _____

Total written points (50) _____

Total offset points (100) _____

Total points (150) _____
Written and Offset

Use the descriptions below to correspond to the print issue found

Lateral Issue Circumferential Issue Other Low Ink Issue Dampening Issue
Impression Squeeze Issue Under Packed Blanket Issue Over Inked Issue All issues listed

Graphic Communications - SkillsUSA Nationals 2015

Finishing - Equipment Used: Baum Ultrafold 714XLT Air Feed Folder and Baumcut 26.4" Cutter

Purpose
Finishing was developed to replicate the bindery/finishing department of the printing industry. SkillsUSA contestants complete four sections within this rotation; cutting, folding (2 jobs), and a written test.

Cutter
Setup and operate the Baumcut 26.4" cutter to cut a four up preprinted job. SkillsUSA contestants are responsible for following instructions, make necessary adjustments to cut four 11x17 magazine covers from the parent/press sheet, perform good housekeeping, and submit completed materials to the judge.

Folder
Setup and operate the Baum Ultrafold 714 table top folder for a single fold (magazine cover) and for a letter fold (trifold brochure). SkillsUSA contestants are responsible for following instructions, make necessary adjustments to fold 11 in x 17 magazine cover in half, perform good housekeeping, and submit completed materials to the judge.

Written
On the written test, the contestants answer 25 questions on general bindery/finishing operations.

FUTURE PRINTERS of America

SkillsUSA®

Graphic Communications - SkillsUSA Nationals 2015

Finishing - Directions

Objectives:

- Demonstrate the ability to read instructions for a particular finishing order.
- Follow Instructions in dividing a sheet properly using a Baum paper cutter.
- Follow instructions in preparing a folded piece using a Baum folder.
- Perform good housekeeping and demonstrate good safety practices.
- Submit completed materials for assigned jobs with contestant's number.
- Complete a written finishing test, demonstrating knowledge of the finishing area.

Directions:

- You have an allowed rotation time to complete all four sections.
- When you have finished each section, submit materials and wait to be dismissed.

Job 1 Paper Cutter Sheet Division/Cutting (4-up 4/4 Sheetwise)

You have been provided with a quantity of press sheets to be divided and trimmed to four (4) separate lifts measuring 11" X 17". (25 points)

Requirements:

1. Make necessary preparations to divide press sheet to finished sheet size as required.
2. Operate cutter using program functions and controls as instructed.
3. All sheets should be submitted for review with lifts kept separate to maintain accuracy.

Job 2 Half-Fold (Conventional Folder)

You have been provided with a quantity of 11" X 17" finished size 4/4 printed brochures to be folded in half, without lip or overhang. The front of the brochure needs to be visible once folded. Twenty (20) saleable pieces should be submitted for the contest. (20 points)

Requirements:

1. Make the necessary preparations to fold the sheet into half-fold form with equal panels.
2. Operate folder using adjustments, settings and controls as instructed.
3. All Brochures should be submitted for review with a saleable material and spoilage separated.

Job 3 Letter Fold (Conventional Folder)

You have been provided with a quantity of 8.5" X 11" bond paper to be folded into a three-fold (or letter-fold), referencing bleeds and panels, if any. Twenty (20) saleable pieces should be submitted for the contest. (30 points)

Requirements:

1. Make the necessary preparations to fold the sheet into a tri-fold (letter-fold) with equal panels.
2. Operate folder using adjustments, settings and controls as instructed.
3. All Brochures should be submitted for review with a saleable material and spoilage separated.

Job 4 Written Finishing Test (Complete at workstation provided)

Complete this portion as per instructions on the test. (50 Points)

Judging

1. Following of instructions
2. Handling of materials
3. Completeness of materials submitted
4. Accuracy of finished products
5. Housekeeping and Safety
6. Correctness of responses on Written Test

Maximum 125 Points

Graphic Communications - SkillsUSA Nationals 2015

Finishing - Judges' Score Sheet

Contestant # _____

Job 1 Paper Cutter

- 0 2 4 6 8 10 Operation of Cutter
- 0 2 4 6 8 10 Handling of Materials and Loading of Cutter
- 0 2 4 6 8 10 Followed Instructions and Specifications
- 0 2 4 6 8 10 Accuracy and Consistency of Work
- 0 2 4 6 8 10 Housekeeping and Safety

Actual number out of 50 points possible_____

Job 2 Half-Fold

- 0 1 2 3 4 Operation of Folder
- 0 1 2 3 4 Handling of Materials
- 0 1 2 3 4 Followed Instructions and Specifications
- 0 1 2 3 4 Accuracy and Consistency of Work
- 0 1 2 3 4 Proper Quantity

Actual number out of 20 points possible_____

Job 3 Three-Fold / Letter-Fold

- 0 1 2 3 4 5 Operation of Folder
- 0 1 2 3 4 5 Handling of Materials
- 0 1 2 3 4 5 Followed Instructions and Specifications
- 0 1 2 3 4 5 Accuracy and Consistency of Work
- 0 1 2 3 4 5 Proper Quantity
- 0 1 2 3 4 5 Housekeeping and Safety

Actual number out of 30 points possible_____

Job 4 Written Finishing Test

Actual number out of 50 points possible_____

Total number out of 125 points possible_____

SkillsUSA
2015 Contest Projects

Health Knowledge Bowl

Click the “Print this Section” button above to automatically print the specifications for this contest. Make sure your printer is turned on before pressing the button.

*Health Knowledge Bowl

SkillsUSA National Conference

2015

Set 1

*Reminders

* Contestants have 30 seconds to determine the answer and write it legibly. The captain must be standing when the time is called. 5 second warning.
* You may not stand unless you have completed writing the answer.
* Any team member may write the answer, however she/he must complete writing before standing.

* If team member is not standing prior to the end of the allotted time, the team will forfeit its chance to answer.
* If the floor judge is unable to read the answer, it will be counted as incorrect

*PRACTICE QUESTION

Category: Practice

Question:
Are you ready for SkillsUSA?

ANSWER: YES!!

Round 1

Category: Employability Skills

Question:
What is the United States federal payroll (or employment) tax imposed on both employees and employers to fund Social Security and Medicare (Acronym)

ANSWER: FICA

Category: Academic Foundations

Question:

What blood type is called the universal donor because it is compatible with any blood type.

ANSWER: O Negative

Category: Legal Responsibilities

Question:

What term describes the procedures, actions, and processes that a healthcare practitioner is permitted to undertake in keeping with the terms of their professional license.

ANSWER: Scope of Practice

Category: Academic Foundations

Question:

What blood type is considered the universal recipient?

ANSWER: AB Positive

Category: Academic Foundations

Question:

What is a progressive neurodegenerative disease that affects nerve cells in the brain and the spinal cord.(acronym)

ANSWER: Amyotrophic Lateral Sclerosis: **ALS**

Category: Academic Foundations

Question:
What is the proper abbreviation for before meals?

ANSWER: a.c.

Category: Legal Responsibilities

Question:
What Federal Act requires establishment of national standards for electronic health care transactions and identifiers for providers, health insurance plans, and employers.

ANSWER: HEALTH INSURANCE PORTABILITY AND ACCOUNTABILITY ACT

Category: Academic Foundations

Question:

What is the most common site for counting a pulse

ANSWER: Radial

Category: Academic Foundations

Question:
How many lbs would a 100 kg female weigh?

ANSWER: 220 lbs

Category: Academic Foundations

Question:
What disease is characterized by a disorder of the central nervous system that affects movement, often including tremors?

ANSWER: Parkinson's Disease

Category: Ethics

Question:
An ethical principle in healthcare that means non-harming or inflicting the least harm possible to reach a beneficial outcome.

ANSWER: Non-maleficence

Category: Academic Foundations

Question:
What is the generic name for the common drug Claritin?

ANSWER: Loratadine

Category: Academic Foundations

Question:
What is the generic name for the common drug Motrin?

ANSWER: Ibuprofen

Category: Academic Foundations

Question:
What is the generic name for the common drug Tylenol?

ANSWER: Acetaminophen

Category: Academic Foundations

Question:
What is a blood protein produced in response to and counteracting a specific antigen?

ANSWER: Antibody

Category: Academic Foundations

Question:
What is the generic name for the common drug Singulair?

ANSWER: Montelukast

Round 2

Category: USA Today News

Question:
According to USA Today News Health report, Heroin use in the United States has Increased, decreased, or stayed the same

ANSWER: INCREASED

Category: Communication

Question:

What is the process of analyzing and evaluating what another person is saying in an effort to understand the speaker's feelings or the true meaning of the message.

ANSWER: Active Listening

Category: Academic Foundations

Question:

How many pairs of spinal nerves does a human have?

ANSWER: 31

Category: Academic Foundations

Question:
What are the drugs that inhibit the action of histamine in the body?

ANSWER: ANTIHISTAMINE

Category: Communication

Question:

Using military notation what is the correct way to write 10:34 in the morning?

ANSWER: 1034

Category: Legal Responsibilities

Question:
What term is defined as a failure to exercise the care that a reasonably prudent person would exercise in like circumstances.

ANSWER: Negligence

Category: Health Maintenance

Question:

A systematic, deliberative and interactive process by which nurses use critical thinking to collect, validate, analyze and synthesize the collected information in order to make judgment about health status.

ANSWER: ASSESSMENT

Category: Academic Foundations

Question:

What are the blood vessels that deliver oxygen-rich blood from the heart to the tissues of the body.

ANSWER: ARTERIES

Category: Academic Foundations

Question:

What test allows your doctor to look at the inner lining of your colon?

ANSWER: COLONOSCOPY

Category: Academic Foundations

Question:
With a blood pressure reading of 146/86, 146 represents _____, 86 represents _____

ANSWER: Systolic, Diastolic

Category: Employability Skills

Question:

The term used to describe communicating with people you know or meet to share information about jobs

ANSWER: NETWORKING

Category: Academic Foundations

Question:
A minor traumatic brain injury that may occur when the head hits an object, or a moving object

ANSWER: CONCUSSION

Category: Academic Foundations

Question:

What type of bone fracture is an incomplete fracture and occurs most often in children.

ANSWER: GREENSTICK FRACTURE

Category: Academic Foundations

Question:
What type of fracture occurs when the bone breaks but there is no puncture or open wound in the skin.

ANSWER: CLOSED FRACTURE

Category: Academic Foundations

Question:
What is a long-term, chronic skin problem that causes skin cells to grow too quickly, resulting in thick, white, silvery, or red patches of skin.

ANSWER: PSORIASIS

Category: Academic Foundations

Question:
What disease is characterized by the loss of skin color in blotches?

ANSWER: VITILIGO

5 MINUTE BREAK

Reminder:
Do not communicate with any other group, advisor, or observer.

Round 3

Category: Safety Practices

Question:

How many milliliters is there in 6 tablespoon?

ANSWER: 90ml

Category: Health Maintenance

Question:
What is the name of an organization that provides health coverage that differs from traditional health insurance by the contracts it has with its providers. (No acronyms)

ANSWER: HEALTH MAINTENANCE ORGANIZATION

Category: Academic Foundations

Question:

What are the most common type of blood cells and the principal means of delivering oxygen (O_2) to the body tissues—via blood flow through the circulatory system?

ANSWER: ERYTHROCYTES

Category: Legal Responsibility

Question:

Document that allows individuals to state what measures should or should not be taken to prolong life when their condition is terminal

ANSWER: LIVING WILL

Category: Diseases

Question:
What term describes an abnormality or impairment of voluntary movement?

ANSWER: DYSKINESIA

Category: Diseases

Question:
What substance is increased in the blood in a patient diagnosed with gout?

ANSWER: Uric Acid

Category: Academic Foundations

Question:
What term refers to the normal inward curvature of the lumbar and cervical regions of the spine?

ANSWER: LORDOSIS

Category: Ethics

Question:
What term denotes or relates to a person whose self-identity does not conform unambiguously to conventional notions of male or female roles?

ANSWER: TRANSGENDER

Category: Academic Foundations

Question:

What is a chronic inflammatory disorder that typically affects the small joints in your hands and feet. This disorder affects the lining of your joints, causing a painful swelling that can eventually result in bone erosion and joint deformity.

ANSWER: RHEUMATOID ARTHRITIS

Category: Academic Foundations

Question:

What disease caused by a diet that lacks vitamin C?

ANSWER: SCURVY

Category: Academic Foundations

Question:

A medical device used to measure amount of hemoglobin that is saturated by oxygen in the blood.

ANSWER: PULSE OXIMETER

Category: Academic Foundations

Question:
What is the term used to describe excessive fat in the feces:

ANSWER:
STEATORRHEA

Category: Academic Foundations

Question:
What term describes an inflammation of the intestine causing diarrhea with blood?

ANSWER:
DYSENTERY

Category: Academic Foundations

Question:
What condition affects only girls and women, it results when a sex chromosome (the X chromosome) is missing or partially missing.

ANSWER:
TURNER SYNDROME

Category: Academic Foundations

Question:
What condition is defined as excessive or abnormally large production or passage of urine?

ANSWER:
POLYURIA

Category: Academic Foundations

Question:

What term is given to excessive thirst and is one of the initial symptoms of diabetes.

ANSWER:
POLYDIPSIA

Round 4

Category: Academic Foundations

Question:
What is the term used for difficulty in swallowing

ANSWER: DYSPHAGIA

Category: Academic Foundations

Question:
What is a mass of cells and fluid that has seeped out of blood vessels or an organ, especially in inflammation?

ANSWER: EXUDATE

Category:Pharmacology

Question:

What is the most common drug prescribed to type II diabetics?

ANSWER: METFORMIN

Category: Academic Foundations

Question:

What is most likely to occur when a human diaphragm becomes spastic

ANSWER: HICCUPS

Category: Academic Foundations

Question:
This disease is characterized by a moon-shaped face and weight gain.

ANSWER: Cushing's Syndrome

Category: Legal Responsibilities

Question:

What does HIPAA stand for?

ANSWER: HEALTH INSURANCE PORTABILITY AND ACCOUNTABILITY ACT

Category: Academic Foundations

Question:

What disease in indicated when the thyroid gland produces too much thyroid hormone?

ANSWER: Hyperthyroidism/Grave's Disease

Category: Academic Foundations

Question:
A substance that causes or accelerates a chemical reaction without itself being affected.

ANSWER: CATALYST

Category: USA News

Question:
USA Today Health reports that inhaled steroids, widely used to treat asthma have caused_____ _____

ANSWER: Bone Loss

Category: Academic Foundations

Question:
What plane that divides the body into superior and inferior parts.

ANSWER: TRANSVERSE PLANE

Category: Academic Foundations

Question:
What is the tranquilizer diazepam better known as?

ANSWER: Valium

Category: Systems

Question:

A set of infection control practices used to prevent transmission of disease.

ANSWER: STANDARD PRECAUTIONS

Category: Academic Foundations

Question:

What term describes
to draw inward toward the median axis of
the body or toward an adjacent part or limb.

ANSWER: ADDUCTION

Category: Academic Foundations

Question:

What is the term for movement of a limb or extremity so that the distal end describes a circle while the proximal end remains fixed.

ANSWER: CIRCUMDUCTION

Category: Academic Foundations

Question:

In healthcare, what does the acronym RICE stand for?

ANSWER: Rest, Ice, Compression Elevation

Category: Academic Foundations

Question:

What is a serious gum infection that damages the soft tissue and destroys the bone that supports your teeth.

ANSWER: PERIODONTITIS

Quietly gather all belongings.
Clean your workspace.
Exit the room.

REMINDER:
You should not discuss the questions/ answers until all groups have finished the competition.

SkillsUSA
2015 Contest Projects

Heating, Ventilation
Air Conditioning and Refrigeration

Click the “Print this Section” button above to automatically print the specifications for this contest. Make sure your printer is turned on before pressing the button.

2015 SkillsUSA Championships
HVACR Contest

June 25, 2015 Louisville, Kentucky

SkillsUSA

HARRIS
THE HARRIS PRODUCTS GROUP

Contestant Procedure Sheet

Event #1: Brazing

Sponsor: Harris Products Group

Time Allowed: 60 minutes

This exercise involves your ability to accomplish the following in the allotted time period:

1. Read and follow a piping diagram
2. Select, measure, cut, and assemble material
3. Use tools and torch
4. Join piping with silver braze alloy and phosphorus-copper-silver braze alloy into a leak-tight assembly
5. During brazing the part must be held in the vise in the position indicated on the drawing

Notes:

1. Use all tools necessary
2. Follow drawing accurately
3. Work safely
4. Clean up work area when finished

1

2015 SkillsUSA Championships
HVACR Contest

June 25, 2015 Louisville, Kentucky

SkillsUSA

HARRIS
THE HARRIS PRODUCTS GROUP

Judging Criteria

Event #1 – Brazing

Sponsor: Harris Products Group

A. **Wear safety glasses** - 5 points maximum

5 points if glasses continually worn.
0 points if glasses not worn.

B. **Layout tube cuts** - 5 points maximum

5 points if contestant makes 7 cuts or less.
0 points if contestant makes more than 7 cuts.

C. **Clean prior to brazing** - 8 points maximum

8 points if contestant cleans all parts by:
a.) using tube brush, sand cloth, (or abrasive pad), to clean fitting I.D. and tube O.D.
b.) using deburring tool on tube ends.
4 points if contestant cleans fitting I.D. and tube O.D. but *does not deburr*.
0 points if there is no part cleaning, (even if they deburr).

D. **Flux required connections** - 8 points maximum

8 points if contestant fluxes *only* connections where Safety Silv 45 is called out, (reference alloy B call out on drawing).
4 points if contestant fluxes any connections where Dynaflow is called out, (reference alloy A callout on drawing).
0 points if no flux is used on any connections where Safety Silv 45 is called out.

E. **Correct braze alloy selection** - 8 points maximum

8 points if contestant uses correct alloys as shown on drawing.
4 points if contestant uses Safety Silv 45 where Dynaflow is called out on the drawing.
0 points if contestant uses Dynaflow on any steel to copper connection, (where Safety Silv 45 is called out).

F. **Braze equipment use; startup** - 8 points maximum

<u>Opening tank valves</u>

4 points if contestant stands to side of regulators when opening cylinder valves.
0 points if contestant stands in front of regulators when opening cylinder valves.

<u>Adjusting delivery pressure and lighting torches</u>

4 points if contestant uses proper delivery pressure settings as listed on the tip chart at the braze station. (Air/acetylene 13 - 15 PSI and oxy-acetylene 2-4 PSI for #2 tip, 3 -5 PSI for #3 tip).
0 points if contestant sets acetylene delivery pressure other than above.

1

2015 SkillsUSA Championships
HVACR Contest

June 25, 2015 Louisville, Kentucky

G. **Assembly position in the vise** - 5 points maximum

5 points if contestant positions part correctly in vise during brazing.
0 points if judge must remind contestant to braze part in the vise.

H. **Filter drier installation and protection** - 8 points maximum

4 points if contestant correctly positions drier in line with refrigerant flow direction.
4 points if contestant wraps filter drier with wet rag prior to brazing.
0 points if contestant positions drier incorrectly and doesn't wrap with a wet rag.

I. **Brazing technique and joint appearance** - 8 points maximum

4 points if contestant removes Schrader valve pin.
4 points if overall braze appearance is acceptable; (unacceptable items would include run down, balls, lumps, charred flux residue).
0 points if contestant makes any brazes not specified on drawing; (an example would be butt brazing two tubes together).

J. **Assembly layout/size** - 14 point maximum

14 points if finished assembly fits within template tolerances.
0 points if assembly is outside size limits.

K. **Leak test** - 18 point maximum

18 points if assembly is leak free.
5 points if contestant repairs leak and it passes second test.
0 points if it leaks after repair, (or if no repair is attempted).

L. **Braze equipment use; shut down** - 10 points maximum

Closing valves and bleeding lines.

10 points if contestant: (1) closes cylinder valve(s), (2) opens torch valves, (one at a time), to bleed pressure from line(s), (3) "backs off" (closes by turning counter clockwise) regulator(s) adjustment screw.
5 points if contestant only closes cylinder valve(s), and, (or), only closes torch adjustment valves, but leaves pressure in the system, (evidenced by gauge pressure reading).
3 points if contestant only closes torch adjustment valves.

M. **Clean up braze area** - 5 points maximum

5 points if contestant straightens up braze table, (things to look for include putting lid on flux jar, not leaving drawing or instructions on table, not leaving unused rod, cleaning pad, torches, strewn about table).
0 points if no effort made to clean up after brazing.

Notes:

1

2

2015 SkillsUSA Championships
HVACR Contest

June 25, 2015 Louisville, Kentucky

SkillsUSA

EMERSON. Climate Technologies

Contestant Score Sheet

Event #2: Troubleshooting Procedure **Sponsor: Emerson Climate Technologies**

Start Time _____ Contestant # _____

Stop Time _____

Total _____ Judge's Initial's _____

Safety		**Score**	**Points**
A.	Wear safety glasses	_____	(0 to10)
Performance			
A.	Select proper tools and use correctly	_____	(0 to 10)
B.	Check ambient temperature	_____	(0 to 5)
C.	Verify system charge via manifold gauge static pressure	_____	(0 to 5)
D.	Turn on system switch	_____	(0 to 5)
E.	Check low side pressure	_____	(0 to 5)
F.	Check high side pressure	_____	(0 to 5)
G.	Use wiring diagram	_____	(0 to 5)
H.	Check voltage at compressor	_____	(0 to 5)
I.	Check thermostat setting/operation	_____	(0 to 5)
J.	Check L.P. control setting/operation	_____	(0 to 5)
K.	Check solenoid coil operation	_____	(0 to 5)
L.	Check solenoid coil voltage or amperage	_____	(0 to 5)
M.	Correctly identify fault	_____	(0 to 35)
	Total	_____	Max 110

Maximum score is 110. No fractional points to be given.

2015 SkillsUSA Championships
HVACR Contest

June 25, 2015 Louisville, Kentucky

EMERSON Climate Technologies

SkillsUSA

Contestant Procedure Sheet

Event #2: Troubleshooting Procedure **Sponsor: Emerson Climate Technologies**

Time Allowed: 30 Minutes

Description of Job:

Perform or follow proper system troubleshooting procedures to identify cause of no cooling.

Problem Statement:

The complaint is no cooling. System short cycles.

Notes:

1. Follow all normal safety procedures.
2. Use proper tools and/or instruments.
3. Return tools and instruments to proper place when finished.
4. Normal conditions: 115 psig HP, 21 psig LP, 12.1 amps, 10°F SH, 10°F SC.

Judges Notes:

1. Have student read Problem Statement prior to starting.
2. Clarify any questions or concerns.
3. Problem Statement must not leave judging area.

2015 SkillsUSA Championships
HVACR Contest

June 25, 2015 Louisville, Kentucky

EMERSON. Climate Technologies

SkillsUSA

Judges Instruction Sheet

Event #2: Troubleshooting Procedure **Sponsor: Emerson Climate Technologies**

DO NOT CHAT WITH CONTESTANTS OR TALK TO ANY SPECTATOR (could be instructor or parent). Call for Technical Committee Member to answer spectator questions.

Total Your Own Score Sheet *Print your name on Score Sheet*

Grading Instructions:

1. **Safety:**

   a. Contestants must wear safety glasses. If not, DEDUCT 10 POINTS, then remind contestant.

2. **Performance:**

   a. When contestant has proper size wrench available but uses adjustable wrenches, **DEDUCT POINTS.**

   b. Low side gauge to suction service valve. Leave attached.

   c. High side gauge to receiver service valve. Leave attached.

   d. Did contestant verify system sequence of operation using wiring diagram?

   e. Contestant does not necessarily have to troubleshoot in the same sequence as the score sheet.

   f. Did contestant verify operation of thermostat, L.P., and solenoid coil per contestant score sheet?

   g. If contestant identifies the faulty wiring to solenoid coil problem correctly, without completing ALL of the performance functions listed, (A through M on the score sheet), ask him/her if there are any other system checks they would want to do to verify the problem and ask them to explain how they came to their conclusion.

   h. When contestant indicates He/She is finished, Escort them back to the waiting area.

   i. Deduct points for any performance checks that were not done by the contestant or correctly explained per item G above.

   j. Normal conditions: 115 psig HP, 21 psig LP, 12.1 amps, 10°F SH, 10°F SC.

2015 SkillsUSA Championships
HVACR Contest

June 25, 2015 Louisville, Kentucky

Carrier
Turn to the Experts

SkillsUSA

Problem Statement

Event #3: Airflow, Superheat and Subcooling Measurements

Sponsor: Carrier Corporation

Time Allowed: 25 Minutes

This exercise involves measuring the airflow of a typical indoor fan section of a residential type air – conditioning system and then measuring the "suction gas superheat" and "liquid subcooling" of the same air conditioning system. Choosing from the instruments provided, you are to measure the total airflow of the air conditioning system, the suction gas superheat as well as the liquid Subcooling, and then answer the related questions on the attached procedure sheet.

Procedure: See next page.

Notes:
1. Follow all normal safety procedures.
2. Use tools and/or instruments properly.
3. Perform tasks in proper sequence.
4. Explain your procedure and findings to your judge.
5. Return tools, instruments, etc. to their proper place when finished.

Judges Notes:

1. Have contestant read this "Problem Statement" and procedure sheet prior to starting. These sheets are not to leave the contest area.

2. The "Procedure Sheet" is for the contestant to use as a worksheet. Place contestant number in upper right and affix behind judges completed score sheet.

3. Clarify any questions after contestant reads instructions and before the judge starts the timing for the event.

3

2015 SkillsUSA Championships
HVACR Contest

June 25, 2015 Louisville, Kentucky

Carrier

Turn to the Experts.

SkillsUSA

Contestant Score Sheet

Event #3: Airflow using **Velocity Pressure,** and measure **Superheat** and **Subcooling**

Sponsor: Carrier Corporation

25 minute max

Stop Time _____ Contestant # _____

Start Time _____

Total _____ Judge's Initial's _____

Safety		**Score**	**Points**
A.	Wear safety glasses	_____	(0 to 4)
Procedure for Measuring Airflow			
A.	Divided duct for traverse reading	_____	(0 to 9)
B.	Hooked up tubes to meter correctly	_____	(0 to 9)
C.	Properly positioned Pitot tube and read	_____	(0 to 9)
D.	Converted pressures to FPM and averaged properly	_____	(0 to 13)
E.	Calculated square footage area of duct properly	_____	(0 to 9)
F.	Calculated CFM correctly (_____)	_____	(0 to 9)
G.	What should airflow be? ± 10% Is this airflow acceptable for a 2-ton system?	_____	(0 to 13)
H.	Explained consequences of too much / too little airflow	_____	(0 to 13)
Procedure for Measuring Suction Superheat			
A.	Uses and reads gauge manifold correctly?	_____	(0 to 9)
B.	Uses and reads electronic thermometer correctly?	_____	(0 to 4)
C.	Calculates the superheat and subcooling properly and correctly?	_____	(0 to 9)
	(Safety Deduction) *	_____	(0 to -10)
	Total	_____	(110 max)

NOTES:

1. Maximum score is 110. No fractional points are to be given.
2. Judge should volunteer to hold Pitot tube for contestant, BUT contestant MUST instruct judge about where to hold and how to position Pitot tube for each reading.

***Caution: Judges should watch contestants carefully; be prepared to intervene if safety is not being observed! (0 to 10 point deduction)**

3

2015 SkillsUSA Championships
HVACR Contest

June 25, 2015 Louisville, Kentucky

SkillsUSA

Carrier

Turn to the Experts

Contestant Score Sheet

Event #3: Airflow using **Temperature Rise,** and measure **Superheat** and **Subcooling**

Sponsor: Carrier Corporation

Stop Time _____ Contestant # _____

Start Time _____

Total _____ Judge's Initials _____

Safety		Score	Points
A	Wear safety glasses		(0 to 4)
B	Working safely with making electrical readings		(0 to 4)

Procedure for Measuring Airflow

A	Turn on electric heat and allow time to warm up		(0 to 13)
B	Chose proper probes for temperature difference and read 1D correctly ( ) degrees (°F)		(0 to 9)
C	Measured volts and amps correctly * (Volts Amps)		(0 to 9)
D	Chose proper formula to calculate CFM		(0 to 13)
E	Calculated CFM correctly ( )		(0 to 13)
F	Explain discrepancies of too much/too little airflow		(0 to 14)
G	What should airflow be? ( ) Is this airflow acceptable for a 2 ton system?		(0 to 9)

Procedure for Measuring Suction Superheat and Subcooling

A	Uses and reads gauge manifold correctly?		(0 to 9)
B	Uses and reads electronic thermometer correctly?		(0 to 4)
C	Calculates the subcooling and superheat properly and correctly?		(0 to 9)
	(Safety Deduction) *		(0 to -10)
	Total		(110 max)

NOTES:

1. Maximum score is 110. No fractional points are to be given.
2. Inform contestants that voltage and amperage are to be taken from the disconnect box. If they ask for the motor amperage you may tell them it is ____ amps.

*** Judges may assist with setting the thermostat at the contestant's request - watch contestants closely when they are measuring voltage and amperage. Be prepared to intervene quickly if they appear to be unsafe. (0 to 10 point deduction)**

3

Velocity Pressures

Velocity Pressure (in. wg.)	Velocity (Ft/Min)	Velocity Pressure (in. wg.)	Velocity (Ft/Min)	Velocity Pressure (in. wg.)	Velocity (Ft/Min)	Velocity Pressure (in. wg.)	Velocity (Ft/Min)
0.01	400	0.29	2150	0.59	3050	1.28	4560
0.02	565	0.30	2190	0.60	3100	1.32	4600
0.03	695	0.31	2230	0.62	3150	1.36	4670
0.04	800	0.32	2260	0.64	3200	1.4	4730
0.05	895	0.33	2300	0.66	3250	1.44	4800
0.06	980	0.34	2330	0.68	3300	1.48	4870
0.07	1060	0.35	2370	0.70	3350	1.52	4930
0.08	1130	0.36	2400	0.72	3390	1.56	5000
0.09	1200	0.37	2440	0.74	3440	1.6	5060
0.10	1270	0.38	2470	0.76	3490	1.64	5120
0.11	1330	0.39	2500	0.78	3530	1.68	5190
0.12	1390	0.40	2530	0.80	3580	1.72	5250
0.13	1440	0.41	2560	0.82	3620	1.76	5310
0.14	1500	0.42	2590	0.84	3670	1.8	5370
0.15	1550	0.43	2620	0.86	3710	1.84	5430
0.16	1600	0.44	2650	0.88	3750	1.88	5490
0.17	1650	0.45	2680	0.90	3790	1.92	5550
0.18	1700	0.46	2710	0.92	3840	1.96	5600
0.19	1740	0.47	2740	0.94	3880	2	5660
0.20	1790	0.48	2770	0.96	3920	2.04	5710
0.21	1830	0.49	2800	0.98	3960	2.08	5770
0.22	1880	0.50	2830	1.00	4000	2.12	5830
0.23	1920	0.51	2860	1.04	4080	2.16	5880
0.24	1960	0.52	2880	1.08	4160	2.2	5940
0.25	2000	0.53	2910	1.12	4230	2.24	5990
0.26	2040	0.54	2940	1.16	4310	2.28	6040
0.27	2080	0.55	2970	1.20	4380		
0.28	2120	0.56	2990	1.24	4460		

Notes: 1. Data for standard air (29.92 in. Hg and 70F)
2. Data derived from the following equation: $V = 4005\sqrt{Vp}$

$Hs = 1.1 \times CFM \times \Delta T$

$Area\ (Rectangle) = \frac{L \times W}{144}$

$Ht = 4.5 \times CFM \times \Delta h$

$CFM = Area\ (sq.ft.) \times Velocity\ (ft/min)$

$Hs = volts \times Amps \times 3.414\ btu/watt$

$CFM = \frac{Volts \times Amps \times 3.414\ btu/watt}{1.1 \times \Delta T}$

$Vfpm = 4005 \sqrt{Vp}$

Hs = Sensible Heat Ht = Total Heat Vp = Velocity Pressure Δh = Total Heat Difference

4

2015 SkillsUSA Championships
HVACR Contest

June 25, 2015 Louisville, Kentucky

LENNOX

SkillsUSA

Contestant Score Sheet

Event #4: Electrical Troubleshooting, A/C **Sponsor: Lennox Industries**

	Troubleshooting 15 minute max	Wiring Diagram 5 minute max
Stop Time	_____	_____
Start Time	_____	_____
Sub-Total	_____	_____
Total	_____	Troubleshooting + Wiring Diagram

Contestant # _____

Judge's Initial's _____

	Score	Points
Safety		
A. Wear safety glasses	_____	(0 or 10)
B. Safe work practices		
a. Used tools safely	_____	(0 or 5)
b. Practiced safe work procedures	_____	(0 or 5)
Performance		
A. Used tools and instruments properly?		
a. Used screw/nut drivers, pliers, etc, properly	_____	(0 to 4)
b. Set meter correctly for ohms & volts	_____	(0 to 8)
B. Troubleshooting		
a. Followed proper troubleshooting procedures (Read problem statement, set to "cooling" Observe component operation)	_____	(0 to 10)
Use required testing equipment in logical pattern	_____	(0 to 15)
b. Correctly identified fault		
i. Quotes "Unit miss-wired" = 15 points		
ii. Quotes "Y1&Y2 wires swapped" = 25 points	_____	(0,15,25)
c. Explained findings to judge properly		
i. "Need to swap Y1 & Y2 wires at subbase ~~furnace~~ terminal strip" = 10 points	_____	(0 or 10)
C. Answered wiring diagram questions correctly?		
Q1. Required power source for L34 coil? A, B, **C**	_____	(0 or 9)
Q2. Controls used in Low Ambient Kit? A, **B**, C	_____	(0 or 9)

Judge's Copy

4

2015 SkillsUSA Championships
HVACR Contest

June 25, 2015 Louisville, Kentucky

Judging Guidelines

Event #4 – Electrical Troubleshooting - Wiring **Sponsor: Lennox Industries**

Time Allowed: 5 minutes

This exercise involves the ability to read a wiring diagram found on a Residential Air Conditioner.

There are 2 questions in this exercise. Determine your answers using the wiring diagram provided. Indicate to the Judge the answer you have chosen for each question by pointing to the corresponding letter A, B, or C. Because of the close proximity of the other contestants, please do not say your answer out loud. Please indicate to the judge when you are ready to begin.

PROBLEM:

What is the voltage requirement of the 2nd stage solenoid coil installed inside the compressor labeled "L34"?

Q1

A	24 VAC	0 points
B	208-230/60/1	0 points
C	24 VDC	9 points

Q2

What controls make up the optional Low Ambient Control kit?

A	S49, RT14	0 points
B	S11, K159	9 points
C	S40, HR1	0 points

Judge's Copy

4

2015 SkillsUSA Championships
HVACR Contest

June 25, 2015 Louisville, Kentucky

LENNOX

SkillsUSA

Judge's Guidelines

The problem consists of a new Air Conditioning system installed a month ago and the home will not cool properly. The office advised the homeowner to turn the thermostat system switch to 'off' and the fan switch to 'auto'. The problem is Y1 and Y2 wires from the thermostat are reversed on the furnace terminal strip.

Before contestant arrival:

1) Set thermostat in mode OFF position, with fan set to AUTO position
2) Furnace and condensing unit access doors are removed
3) Furnace safety switch is in closed position
4) Manifold gauge set is attached

Safety	**Score**	**Points**
		(0 to 20)
A. Wear safety glasses	_____	(0 or 10)
B. a) Used tools safely	_____	(0 or 5)
b) Practiced safe work procedures	_____	(0 or 5)

Performance

A. Used tools and instruments properly		(0 to 12)
b) Used screw/nut drivers, pliers, etc., properly?	_____	(0 to 4)
a) Set meter correctly when measuring volts or ohms?	_____	(0 to 8)
B. Troubleshooting		
Followed proper troubleshooting procedures?		(0 to 10)
Contestants are expected to:		
1) Read the Problem Statement		
2) Turn the thermostat to "call" for cooling		
3) Observe System Components Operation	_____	(0 to 10)

Judge's Copy

4

2015 SkillsUSA Championships
HVACR Contest

June 25, 2015 Louisville, Kentucky

4) Utilize required testing equipment in logical pattern

i) Check for cooling call from thermostat.

(1) Measurement from Y1 and Y2 to C at furnace and outdoor unit?

ii) Check for line voltage at contactor?

iii) Check for 24v at contactor coil?

iv) Look at attached pressure manifold set?

v) Trace fault to Y1 & Y2 wires switched at **furnace** terminal strip? _____ (0 to 15)

Correctly identified fault?

vi) "Unit miss-wired" - Award 15 points

vii) "Y1 & Y2 wires swapped at **furnace** terminal strip" - Award 25 points _____ (0, 15, 25)

5) Properly explained findings to judge?

i) "Need to swap Y1 to Y2 thermostat wires at **furnace** terminal strip" - Award 10 points _____ (0 to 10)

C. Solved wiring diagram circuit correctly? (0 to 18)

Q1. What is the voltage requirement of the 2nd stage solenoid coil installed inside the compressor labeled "L34"? A B **C** _____ (0 or 9)

Q2. What controls make up the optional Low Ambient Control kit? A **B** C _____ (0 or 9)

Note: Maximum score is 110. No fractional points to be given.

Total _____ (110 max)

Judge's Copy

4

2015 SkillsUSA Championships
HVACR Contest

June 25, 2015 Louisville, Kentucky

SkillsUSA

Contestant Procedure Sheet

Event #4 – Electrical Troubleshooting, A/C **Sponsor: Lennox Industries**

Time Allowed: 15 minutes

This exercise involves the diagnosis of a typical problem found on a residential heating and air conditioning system.

Read the "customer complaint" below. Using tools and/or instruments provided, you are to determine the cause of the system problem. (**Please do not actually repair the unit.**) After you finish your assignment, explain to the judge what the problem is, your method of troubleshooting and what the corrective action would be.

CUSTOMER COMPLAINT OR PROBLEM

The problem consists of a home not cooling properly. The new system was installed a month ago.

The dispatcher for your heating and cooling company instructed the customer to turn the thermostat mode to 'Cool' and the blower switch to 'auto' until you could arrive to troubleshoot.

Notes:

1. You will be working with **"Live"** equipment voltages. The furnace 120 volt door interlock switch has been bypassed! **Use Caution!**
2. Follow all normal safety procedures
3. Use proper tools and/or instruments
4. Perform tasks in proper sequence
5. Explain your diagnosis to the judge
6. Return all tools, instruments, etc. to proper place when finished

Judge's Notes

1. Have contestant read CUSTOMER COMPLAINT OR PROBLEM statement
2. Clarify questions before beginning
3. CUSTOMER COMPLAINT OR PROBLEM statement must not leave immediate contest area

4

2015 SkillsUSA Championships
HVACR Contest

June 25, 2015 Louisville, Kentucky

LENNOX

SkillsUSA

Contestant Score Sheet

Event #4: Electrical Troubleshooting, A/C **Sponsor: Lennox Industries**

	Troubleshooting 15 minute max	Wiring Diagram 5 minute max
Stop Time	_____	_____
Start Time	_____	_____
Sub-Total	_____	_____
Total	_____	Troubleshooting + Wiring Diagram

Contestant # _____

Judge's Initial's _____

	Score	Points
Safety		
A. Wear safety glasses	_____	(0 or 10)
B. Safe work practices		
a. Used tools safely	_____	(0 or 5)
b. Practiced safe work procedures	_____	(0 or 5)
Performance		
A. Used tools and instruments properly?		
a. Used screw/nut drivers, pliers, etc, properly	_____	(0 to 4)
b. Set meter correctly for ohms & volts	_____	(0 to 8)
B. Troubleshooting		
a. Followed proper troubleshooting procedures (Read problem statement, set to "cooling" Observe component operation)	_____	(0 to 10)
Use required testing equipment in logical pattern	_____	(0 to 15)
b. Correctly identified fault		
i. Quotes "Unit miss-wired" = 15 points		
ii. Quotes "Y1&Y2 wires swapped" = 25 points	_____	(0,15,25)
c. Explained findings to judge properly		
i. "Need to swap Y1 & Y2 wires at Subbase ~~furnace~~ terminal strip" = 10 points	_____	(0 or 10)
C. Answered wiring diagram questions correctly?		
Q1. Required power source for L34 coil? A, B, **C**	_____	(0 or 9)
Q2. Controls used in Low Ambient Kit? A, **B**, C	_____	(0 or 9)

Judge's Copy

4

4

2015 SkillsUSA Championships
HVACR Contest

June 25, 2015 Louisville, Kentucky

Judge's Guidelines

The problem consists of a new Air Conditioning system installed a month ago and the home will not cool properly. The office advised the homeowner to turn the thermostat system switch to 'off' and the fan switch to 'auto'. The problem is Y1 and Y2 wires from the thermostat are reversed on the furnace terminal strip.

Before contestant arrival:

1) Set thermostat in mode OFF position, with fan set to AUTO position
2) Furnace and condensing unit access doors are removed
3) Furnace safety switch is in closed position
4) Manifold gauge set is attached

Safety	**Score**	**Points**
		(0 to 20)
A. Wear safety glasses	_____	(0 or 10)
B. a) Used tools safely	_____	(0 or 5)
b) Practiced safe work procedures	_____	(0 or 5)

Performance

A. Used tools and instruments properly		(0 to 12)
b) Used screw/nut drivers, pliers, etc., properly?	_____	(0 to 4)
a) Set meter correctly when measuring volts or ohms?	_____	(0 to 8)
B. Troubleshooting		
Followed proper troubleshooting procedures? Contestants are expected to:		(0 to 80)
1) Read the Problem Statement		
2) Turn the thermostat to "call" for cooling		
3) Observe System Components Operation	_____	(0 to 10)

Judge's Copy

4

2015 SkillsUSA Championships
HVACR Contest

June 25, 2015 Louisville, Kentucky

4) Utilize required testing equipment in logical pattern

i) Check for cooling call from thermostat.

(1)Measurement from Y1 and Y2 to C at furnace and outdoor unit?

ii) Check for line voltage at contactor?

iii) Check for 24v at contactor coil?

iv) Look at attached pressure manifold set?

v) Trace fault to Y1 & Y2 wires switched at **furnace** terminal strip? _____ (0 to 15)

Correctly identified fault?

vi) "Unit miss-wired" - Award 15 points

vii)"Y1 & Y2 wires swapped at **furnace** terminal strip" - Award 25 points _____ (0, 15, 25)

5) Properly explained findings to judge?

i) "Need to swap Y1 to Y2 thermostat wires at **furnace** terminal strip" - Award 10 points _____ (0 to 10)

C. Solved wiring diagram circuit correctly? (0 to 18)

Q1. What is the voltage requirement of the 2nd stage solenoid coil installed inside the compressor labeled "L34"? A B **C** _____ (0 or 9)

Q2. What controls make up the optional Low Ambient Control kit? A **B** C _____ (0 or 9)

Note: Maximum score is 110. No fractional points to be given. **Total** _____ (110 max)

Judge's Copy

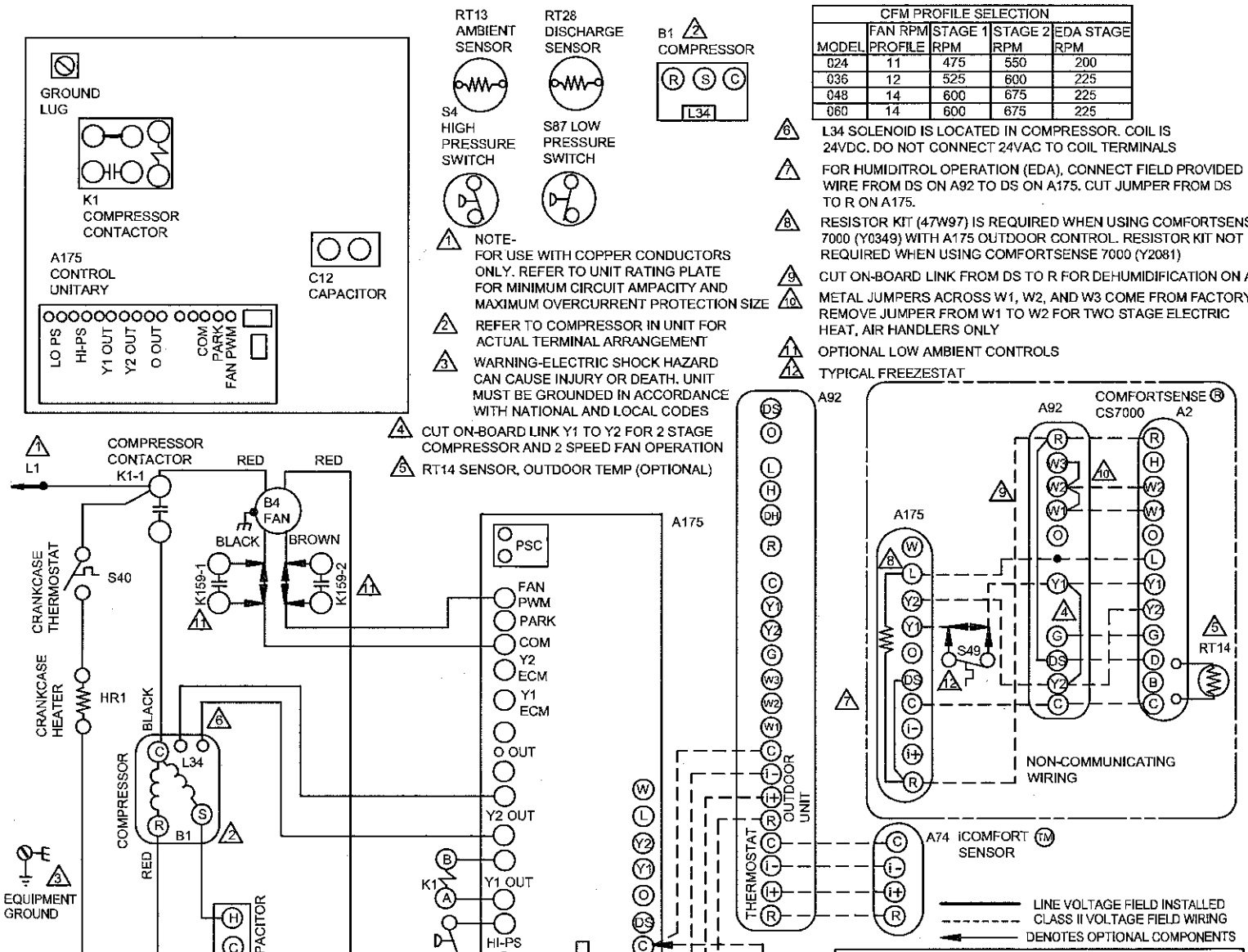

CFM PROFILE SELECTION				
MODEL	FAN RPM PROFILE	STAGE 1 RPM	STAGE 2 RPM	EDA STAGE RPM
024	11	475	550	200
036	12	525	600	225
048	14	600	675	225
060	14	600	675	225

1. NOTE- FOR USE WITH COPPER CONDUCTORS ONLY. REFER TO UNIT RATING PLATE FOR MINIMUM CIRCUIT AMPACITY AND MAXIMUM OVERCURRENT PROTECTION SIZE
2. REFER TO COMPRESSOR IN UNIT FOR ACTUAL TERMINAL ARRANGEMENT
3. WARNING-ELECTRIC SHOCK HAZARD CAN CAUSE INJURY OR DEATH. UNIT MUST BE GROUNDED IN ACCORDANCE WITH NATIONAL AND LOCAL CODES
4. CUT ON-BOARD LINK Y1 TO Y2 FOR 2 STAGE COMPRESSOR AND 2 SPEED FAN OPERATION
5. RT14 SENSOR, OUTDOOR TEMP (OPTIONAL)
6. L34 SOLENOID IS LOCATED IN COMPRESSOR. COIL IS 24VDC. DO NOT CONNECT 24VAC TO COIL TERMINALS
7. FOR HUMIDITROL OPERATION (EDA), CONNECT FIELD PROVIDED WIRE FROM DS ON A92 TO DS ON A175. CUT JUMPER FROM DS TO R ON A175.
8. RESISTOR KIT (47W97) IS REQUIRED WHEN USING COMFORTSENSE 7000 (Y0349) WITH A175 OUTDOOR CONTROL. RESISTOR KIT NOT REQUIRED WHEN USING COMFORTSENSE 7000 (Y2081)
9. CUT ON-BOARD LINK FROM DS TO R FOR DEHUMIDIFICATION ON A9
10. METAL JUMPERS ACROSS W1, W2, AND W3 COME FROM FACTORY. REMOVE JUMPER FROM W1 TO W2 FOR TWO STAGE ELECTRIC HEAT, AIR HANDLERS ONLY
11. OPTIONAL LOW AMBIENT CONTROLS
12. TYPICAL FREEZESTAT

NOTE-
IF ANY WIRE IN THIS APPLIANCE IS REPLACED,IT MUST BE REPLACED WITH WIRE OF LIKE SIZE, RATING, INSULATION THICKNESS, AND TERMINATION.

LENNOX

COOLING CONDENSING

XC21

0412

Supersedes

Form No. 537509-01

04/12

© 2011

Litho U.S.A.

2015 SkillsUSA Championships
HVACR Contest

June 25, 2015 Louisville, Kentucky

HUSSMANN

SkillsUSA

Contestant Procedure Sheet

Event: #5 – Refrigeration System Troubleshooting (Electrical) **Sponsor: Hussmann**

Time Allowed: 15 Minutes

DESCRIPTION OF THIS JOB

This exercise involves diagnosis of a problem in a self-contained refrigeration display case commonly found in supermarkets and convenience stores.

The following tools and equipment are provided:

- Screwdrivers
- Needle-nosed pliers
- Digital volt-ohmmeter (VOM)
- Electrical diagram

JOB DESCRIPTION:

Locate an electrical fault in a commercial refrigeration unit.

PROBLEM STATEMENT:

You're about to deliver this new unit to your customer. A quick check reveals that the compressor does not operate.

Use the digital volt-ohm meter (VOM) and the electrical diagram to trace the voltage path.

Be able to:

1. *Use the schematic diagram to trace circuits on the equipment.*
2. *Point out the fault on the cooler.*
3. *Point out the fault on the electrical diagram and explain why it would cause the symptom.*
4. *Explain the thought-process that led you to the fault.*
5. *Explain how to remove the "bug" that's been placed in this unit.*

- Follow all normal safety procedures.
- Treat the judge like a customer: explain the problem thoroughly and clearly.
- When finished, return the unit to the condition it was in when you began.

Notes to Judge:

1. **Have contestant read the "Problem Statement" shown above.**
2. **Ask the contestant to respond to all of the five (5) items listed above.**
3. **This document and the electrical diagram must not leave the contest area.**

7

2015 SkillsUSA Championships
HVACR Contest

June 25, 2015 Louisville, Kentucky

RSES The HVACR Training Authority

SkillsUSA

Judges Scoring Instructions
Confidential

Event #7: Refrigerant Procedures **Sponsor: RSES**

A Wear safety Glasses (0 – 2)

a) If contestant has and wears safety glasses, award (2) points.

b) If the contestant must be told to put on safety glasses, award (1) point.

c) If the contestant does not have safety glasses award (0) points.

B Identify what type of Refrigerant is in this system (0 – 3)

(Look at the name plate)

C Connect gauges set properly to system (0 – 7)

a) Identify the high and low access fittings on the unit =4 points

b) Connect high and low side hoses to the appropriate fittings = 2 points

c) Purge air from hoses = ~~2~~ 1 points

D Check system for refrigerant leak (0 – 9)

a) Contestant should check if system has some charge = 2 points

b) What would be done if no charge? = 2 points

c) Contestant should be familiar with the basic operation of an electronic leak detector = ~~2~~ 1 points

d) Contestant should know and demonstrate the process for finding the leak with leak detector = 4 points

Note –Contestant does not need to find the exact leak to get all points!

2015 SkillsUSA Championships
HVACR Contest

June 25, 2015 Louisville, Kentucky

[illegible]

2015 SkillsUSA Championships
HVACR Contest

June 25, 2015 Louisville, Kentucky

J Perform recovery through a complete pull down (0 – 4)

(Judge is to discharge a small amount of refrigerant into hoses by opening and closing C&D valves)

a) *Contestant to run a recovery on the system; they must pull the system down to below 4 inches of vacuum = 3 points*

b) *If they do not open valve on tank or manifold = 2 points*

K EPA required recovery pull down level for this system (0 – 4)

This system contains 52 oz of refrigerant (less than 5 pounds); therefore a recovery to 4 ~~psig~~ is required = 5 points

L Correctly connect vacuum pump and vacuum gauge (0 – 4)

a) *Contestant is to connect vacuum pump and vacuum gauges to system as agreed to in judges meeting and pull a vacuum = 3 points*

b) *Manifold should be reading 0 PSI or below prior to connecting to vacuum pump = 2 points*

M The purpose of pulling a vacuum on the system? (0 – 4)

A vacuum is pulled to remove air and moisture from the system piping and components.

c) *If contestant states only air or moisture, award 2 points*

d) *If contestant states both air and moisture, award 3 points*

N The purpose of the electronic vacuum gauge? What is the term of measurement they report? (0 – 5)

An electronic vacuum gauge allows technicians to:

a) *Accurately measure a deep vacuum = 2 points*

b) *Ensure is tight and dry = 2 points*

c) *Term of measurement used in a vacuum gauge is a micron = 2 points*

O Check vacuum pump for performance (0 – 3)

Use a vacuum micron gauge directly on the vacuum pump. A good pump should be able to pull below 100 microns = 3 points

2015 SkillsUSA Championships
HVACR Contest

June 25, 2015 Louisville, Kentucky

P. [illegible] (0 – 10)

[illegible] points

1) [illegible]

2) [illegible]

3) [illegible]

Q. [illegible] (0 – 4)

[illegible]

a) [illegible] points

R. [illegible] (0 – 10)

a) [illegible] 2 points

b) [illegible] 3 points

c) [illegible] points

S. What is the refrigerant charge in the system? (0 – 2)

Refrigerant Charge – [illegible] points

T. Procedure for checking quality of refrigerant / oil in a system (0 – 4)

a) Acid test can be run on the system oil – 2 points

b) Moisture sight glass can be used for moisture – 2 points

U. How can refrigerant be cleaned in a working system? (0 – 4)

A filter drier can be used to remove contaminates and dry the refrigerant.

a) Filter only – 2 points

b) Drier only – 2 points

2015 SkillsUSA Championships
HVACR Contest

June 25, 2015 Louisville, Kentucky

V **<u>If Nameplate information is not available</u>**, how is the proper charge determined? (0 – 5)

(Based on the type of metering device, either fixed orifice or expansion valve, charge using either superheat or Subcooling)

a) Fixed restriction: SuperHeat = [illegible] points 2

b) TXV: SubCool = 3 points

W Replace all tools and Caps to their original locations (0 – 3)

(Contestant must put back all tools and caps)

If completed;

a) Tools – award 2 points

b) Caps – award [illegible] points
1

At this point the judge should subtotal the score for a maximum of 11[illegible] points and pass the scoring sheet to the refrigerant identification judge.

X Identify the type of refrigerant in tanks (0 – 7)

(Contestant will take a pressure temperature reading on three tanks of refrigerant and determine the type of refrigerant in the tank)

a) If contestant knows how to determine refrigerant by pressure temp method, -- award 4 points

b) If contestant knows process but does not get readings correct. (At least 2 of the three refrigerants must be correctly identified to get all points for this section.)-- award [illegible] points
3

TOTAL SCORE (110 max)

7

2015 SkillsUSA Championships
HVACR Contest
June 25, 2015 Kansas City, Missouri

RSES The HVACR Training Authority

SkillsUSA

Contestant Score Sheet

Event #7: Refrigerant Procedures **Sponsor: RSES**

45 minute max

Stop Time

Start Time

Total

Contestant #

Judge's Initial's

			Score	Points
	A.	Safety Glasses		(0 – 2)
	B.	**Identify correct refrigerant type for this system?**		(0 – 3)
	C.	Connect gauges properly to system		(0 – 7)
	D.	Check system for refrigerant leak		(0 - 9)
	E.	Connect recovery unit to system and tank		(0 – 7)
	F.	Proper Use of Pressure Vessel		(0 – 2)
	G.	**Tank Pressure Rating?**		(0 – 2)
	H.	**Tank Certification Date?**		(0 – 2)
	I.	**Type of Refrigerant in Tank?**		(0 – 5)
7	J.	Perform recovery through a complete pull down		(0 – 4)
	K.	**EPA required level unit must be pulled down to?**		(0 – 4)
	L.	Correctly connect vacuum pump and vacuum gauge		(0 – 4)
	M.	**Purpose of pulling a vacuum on the system?**		(0 – 4)
	N.	**Purpose of an electronic vacuum gauge?**		(0 – 5)
	O.	Check vacuum pump for performance		(0 – 3)
	P.	Complete evacuation of the system		(0 – 9)
	Q.	Check system for vacuum leaks		(0 – 4)
	R.	Use the charging device, set up to properly recharge		(0 – 8)
	S.	**Proper refrigerant & charge for this unit?**		(0 – 3)
	T.	**Procedure for checking refrigerant/oil in a system?**		(0 – 4)
	U.	**Procedure for cleaned refrigerant in a working system?**		(0 – 4)
	V.	**Nameplate is not available, how is charge determined?**		(0 – 5)
	W.	Replace all tools to their original locations		(0 – 3)
		Subtotal		**(103 max)**
	X.	Identify the type of refrigerant in tanks		(0 – 7)
		Total		**(110 max)**

NOTE: Maximum score – **110 Points**

2015 SkillsUSA Championships
HVACR Contest

June 25, 2015 Louisville, Kentucky

Problem Statement

Event #7: Refrigerant Procedures **Sponsor: RSES**

Time allowed: 45 minutes

Read this entire "Problem Statement" page and clarify any questions you have with your judge before starting this event.

Notes:

1. Follow all normal safety procedures.
2. Use proper tools and/or instruments
3. Perform tasks in proper sequence.
4. Explain your process to the judge as you proceed.
5. Return tools and instruments to proper place when finished.

This exercise involves using the following tools and equipment:

- Package air conditioning unit
- Recovery unit and cylinder
- Vacuum pump
- Manifold set
- Electronic vacuum gauge
- Electronic scale
- Electronic leak detector

Contestant is to:

1. Check system for refrigerant leaks using electronic leak detector.
2. Properly hook-up the Recovery Unit and Cylinder to the Package AC system and recover some refrigerant.
3. Properly hook-up Vacuum Pump & Vacuum Gauge evacuate the system to industry standard also check for vacuum leaks.
4. Properly hook-up refrigerant cylinder and recharge the system.
5. Identify 3 types of unknown refrigerant.
6. Answer some questions the judge has for you regarding the processes you have just completed.

Return this sheet to Judge when you finish this event!

7

2015 SkillsUSA Championships
HVACR Contest

June 25, 2015 Louisville, Kentucky

Problem Statement

Event #7: Refrigerant Procedures **Sponsor: RSES**

Time allowed: 45 minutes

While waiting for Event #7, contestants should carefully read this "Problem Statement" and organize their thoughts as to what actions they will be asked to perform. When called into this event, contestants will be given another copy of this sheet for reference during the contest. Contestants should clarify any questions with the event judge before starting this event.

Scenario: The service manager has informed you that this system has a leak. You'll need to: find the leak; recover the remaining refrigerant; evacuate, recharge the system and ready the system for normal operation.

Notes:

1. Follow all normal safety procedures.
2. Use proper tools and/or instruments.
3. Perform tasks in proper sequence.
4. Explain your process to the judge as you proceed.
5. Return tools and instruments to proper place when finished.

This exercise involves using the following tools and equipment:

- Package air conditioning unit
- Recovery unit and cylinder
- Vacuum pump
- Manifold set
- Electronic vacuum gauge
- Electronic scale
- Electronic leak detector

Contestant is to:

1. Check system for refrigerant leaks using electronic leak detector.
2. Properly hook-up the Recovery Unit and Cylinder to the Package AC system and recover some refrigerant.
3. Properly hook-up Vacuum Pump & Vacuum Gauge, evacuate the system to industry standard, and check for vacuum leaks.
4. Properly hook-up refrigerant cylinder and recharge the system.
5. Identify 3 types of unknown refrigerant.
6. Answer some questions the judge has for you regarding the processes you have just completed.

DO NOT REMOVE THIS SHEET FROM THIS CHAIR!!!

7

2015 SkillsUSA Championships
HVACR Contest
June 25, 2015 Louisville, Kentucky

Carrier
Turn to the Experts.

SkillsUSA

Contestant Procedure Sheet

Event #8 Electrical Troubleshooting, Gas Heating **Sponsor: Carrier Corp.**

Contestant: Read this entire "Procedure Sheet" page and clarify any questions you have with your judge before starting this event.

Time Allowed: 15 Minutes

DESCRIPTION OF THIS JOB

- This exercise involves diagnosing a non-working gas furnace.

SITUATION:

- It is 4:30pm on Monday afternoon in January. Your company has just installed a gas furnace for Mrs. Homeowner. The installers could not get the furnace to operate and have left the jobsite. Your employer has dispatched you with instruction to "get the furnace running before you go home tonight".

TASK:

- Determine why the heat is not operating.
- **Before** taking corrective actions check with judge.
- Explain your diagnostic process and conclusions to the judge.

JUDGE'S NOTES:

- Have Contestant read "Contestant Procedure Sheet" prior to starting.
- Clarify questions before beginning.
- "Contestant Procedure Sheet" must not leave immediate contest area.

2015 SkillsUSA Championships
HVACR Contest
June 25, 2015 Louisville, Kentucky

SkillsUSA

Carrier
Turn to the Experts

Judging Guidelines/Procedures

Event #8: Electrical Troubleshooting, Heating **Sponsor: Carrier Corporation**

Overview

Problem

The problem consists of a 90% AFUE condensing gas furnace that has a pressure switch tube disconnected. Also, the low voltage fuse in its control circuit is open.

Before contestant arrives at the station, the judge will verify a blown low voltage fuse is in the control board, the tube to the pressure switch is disconnected at the pressure switch tube connector, the thermostat is set to "off", and the furnace doors are resting against the unit. Provide black electrical tape for the contestants use on the blower door safety switch.

Expected Contestant Diagnostic Logic

Contestants are expected to:

A. Read the Problem Statement.

B. Notice the thermostat display is blank as a result of the blown fuse.

- Find the blown low voltage fuse using the furnace's wiring diagram with a VOM meter;

or

- Find the blown low voltage fuse using the furnace's control board LED and service code chart. LED code 24 secondary voltage fuse is open.
  - ➢ Once the contestant finds the bad fuse the Judge will provide the contestant with a good new fuse.

C. Turn the thermostat to "call" heat

- Find the tube to the pressure switch tube is disconnected resulting in open pressure switch circuit code using the furnace's control board LED and service code chart. I.e. LED code 32 Pressure switch did not close on call for heat or re-open after call for heat is satisfied.

  Or

- Find the tube to the pressure switch is disconnected by inspecting the furnace controls.
- Repair the disconnected tube by reattaching it to the pressure switch tube connector port.

[illegible]

2015 SkillsUSA Championships
HVACR Contest
June 25, 2015 Louisville, Kentucky

Judging

Upon Contestant Arrival Judge:

- Records Contestant Number.
- Allows contestant ample time to review Problem Statement.
- Answers questions contestant may have unless answer will provide contestant unfair advantage.
- Once contestant is ready the judge will record start time.
- After the contestant offers final explanation judge will record stop time.

Safety

A. Wear safety glasses – (0 or 4) points.
- Safety glasses must be in place before starting contest. Contestant is permitted to have glasses removed while reading Problem Statement.
- Points are awarded in an "all or nothing" basis.

B. Use tools and work safely – (0, 4, 9, or 14) points.
- Tools and test instruments must be used in accordance to their intended purpose. Any other use is not permitted (i.e. using a screwdriver for prying).
- Point guideline
  - Points are awarded for observing all safety procedures.
  - Ten points are deducted for connecting wiring or otherwise working on electrical (unless making voltage check) with unit powered.
  - Five points are deducted for using tools and instruments for purposes other than intended (ie using a screwdriver for prying).

Performance

A. Use tools properly? – (0 or 4) points.
- The only hand tools necessary for this station is a nut driver to open the control box area.
  - Points awarded on an "all or nothing" basis.

B. Use instruments properly? – (0 or 4) points.
  - Use of VOM to measure high voltage and or control low voltage of unit. Points awarded on an "all or nothing" basis.

2015 SkillsUSA Championships
HVACR Contest
June 25, 2015 Louisville, Kentucky

[illegible]

- [illegible]
  - [illegible]
- [illegible]
- [illegible]
- [illegible]

[illegible]

- [illegible]
  - [illegible]
  - [illegible]
  - [illegible]

[illegible]

- [illegible]
- [illegible]
  - [illegible]
    - [illegible]
    - [illegible]
      - [illegible]
        - [illegible]

2015 SkillsUSA Championships
HVACR Contest

June 25, 2015 Louisville, Kentucky

Carrier®
Turn to the Experts.

SkillsUSA

Contestant Score Sheet

Event #8: Electrical Troubleshooting, Heating

Sponsor: Carrier Corporation

Troubleshooting
15 minute max

Stop Time _____

Start Time _____

Total _____

Contestant # _____

Judge's Initial's _____

	Score	Points
1. Safety		
A. Wear safety glasses	_____	(0 or 4)
B. Used tools safely and worked safely	_____	(0 or 14)
2. Performance		
A. Use tools properly?	_____	(0 or 4)
B. Use instruments properly?	_____	(0 or 4)
C. Did contestant:		
1. Check low voltage wiring for power?	_____	(0 or 9)
2. Use troubleshooting charts or wiring diagram?	_____	(0 to 13)
3. Correctly diagnose the blown fuse?	_____	(0 to 13)
4. Diagnose loose tube & open pressure switch?	_____	(0 to 13)
D. Use a logical diagnostic procedure?	_____	(0 to 18)
E. Explain findings to judge properly?	_____	(0 to 18)
Total	_____	(110 max)

Note: Points to be given in increments of 5.

SkillsUSA
2015 Contest Projects

Industrial Motor Control

Click the “Print this Section” button above to automatically print the specifications for this contest. Make sure your printer is turned on before pressing the button.

Skills 2014 Inventory		
Industrial Motor Control		
Qty	**Description**	**Box**
50	Motor Starter Enclosed (CHECN0511AAA) Empty	2
46	Limit Switch CH E50SB 4 Pole	2
10	lb drywall screws	2
1000	10 x 3/4" screws	2
1000	8 x 1 1/2" screws	2
300	Red Marrette Wirenuts	2
400	Yellow Marrette Wirenuts	2
300	Ground Screws	2
100	1/2 Heavy Wall one hole straps	2
100	3/8 one Hole Straps	2
150	Romex 3/8" connectors	2
30	MC 3/8 connectors	2
3	TRL27 Timers	2
100	Terminal Strip Connectors Gray	2
50	End Terminal Caps	2
6	Electric Meters DVM	2
48	E50SA Limit Sw	2
41	Roto Zips	2
42	4-hole Enclosures	2
96	3-Position Selector Switches NO/NO Hold/Off/Hold	2
34	Power Cords 120 volts	2
49	Photo Cells 1351E-6514 Eaton	2
48	Blue Indicator Lights, 120 volts.	2
48	Amber Indicator Lights 120 volts	2
87	Green Indicator Lights	2
46	Black Pushbuttons NO./NC	2
44	Red Indicator Lights	2
4	Step sttols	2
1	4-foot ladder	2
3	Power Strips	2
2	Conduit Jigs	2
100	Din Rail	2
28	Rolls Black Tape	2
		2
		2
		2

Skills 2014 Inventory				
Industrial Motor Control				
Qty	**Description**	**Box**		
24	Large Enclosure - 24" X 18"	3		
Material below is mounted in the above enclosures.				
48	Motor Starter Open (CH C306GN3)side & top aux.	3		
48	Contact Block - top mount - 2NO/2NC	3		
48	Contact Block - side mount - 1NO - C320KGS1	3		
48	Timing Relay -Eaton TRL27 24 - 240 v AC/DC 4 Functions	3		
48	Relay (Spade 4-pole) D2PR4A	3		
48	Relay Base - D2PA6	3		
24	Ground Bars	3		
24	Terminal Block Assemblies - 10 term, 2 ends	3		
2	Test Cords	3		

Skills 2014 Inventory				
	Industrial Motor Control			
Qty	Description	Box		
23	Large Enclosure - 24" X 18"	5		
Material below is mounted in the above enclosures.				
46	Motor Starter Open (CH C306GN3)side & top aux.	5		
46	Contact Block - top mount - 2NO/2NC	5		
46	Contact Block - side mount - 1NO - C320KGS1	5		
46	Timing Relay -Eaton TRL27 24 - 240 v AC/DC 4 Functions	3		
46	Relay (Spade 4-pole) D2PR4A	5		
46	Relay Base - D2PA6	5		
23	Ground Bars	5		
23	Terminal Block Assemblies - 10 term, 2 ends	5		
3	Esile	5		
1	Band Saw Milwaukee	5		
3	Milwaukee Drills	5		
	Banners			

Skills 2013 Inventory				
Industrial Motor Control				
Qty	Description	Box		
31	Eaton Overload Relay Bases C306GN3B	6	*	
750'	16/8 MC (Red)	6	*	
500'	14 /3 MC cable	6	*	
100'	1/2 Metal Flex	6	*	
4750	#14 AWG Red	6		
3000'	#14 Blue	6		
4750	#14 AWG Black	6		
1750	#14 AWG White	6		
2250	#14 AWG Green	6		
75'	1/2 Liquidtight conduit	6		
59	Eaton TOP Mount Aux C320KGT15	6		
95	Red Push to test Buttons 120 V	6		
49	Green Push to Test Buttons 120 v	6		
45	Limit Switches E5SA NO/NC	6		
50	eaton Aux Sidemount Contacts C32KGS1	6		
144	Red Pushbotton NO/NC	6		
24	Eaton Aux Contact C320KGS1	6		
25	Power Cords 120 Volts	6		
7	Green Push Buttons NO/NC	6		
26	Armor Cable Splitters	6		
34	Selector Switches NO/NO Nomentary/Off/Hold	6		
4200	Yellow Ideal Wirenuts	6		
3600	Red Ideal Wirenuts	6		
26	D2PR4A Relays 120 v	6		
53	D2PA6 Relay Bases	6		
5	3/4 - 1/2 inch Reducing Bushings	6		
5	1 - 1/2 inch reducing Bushings	6		
600	Red Marrette Wire Connectors	6		
580	Yellow Marrette Wire Connectors	6		
1000	Green Ground Screws	6		
1100	Ideal Power Tie Cabkle Ties	6		
95	Black Pushbuttons NO/NC	6		
50	White ID Tape	6		
49	Blue ID Tape	6		
24	T&B Metal 1/2" Flex Connector	6		
32	D2PA4 Base Black.	6		
10	Benders	6		

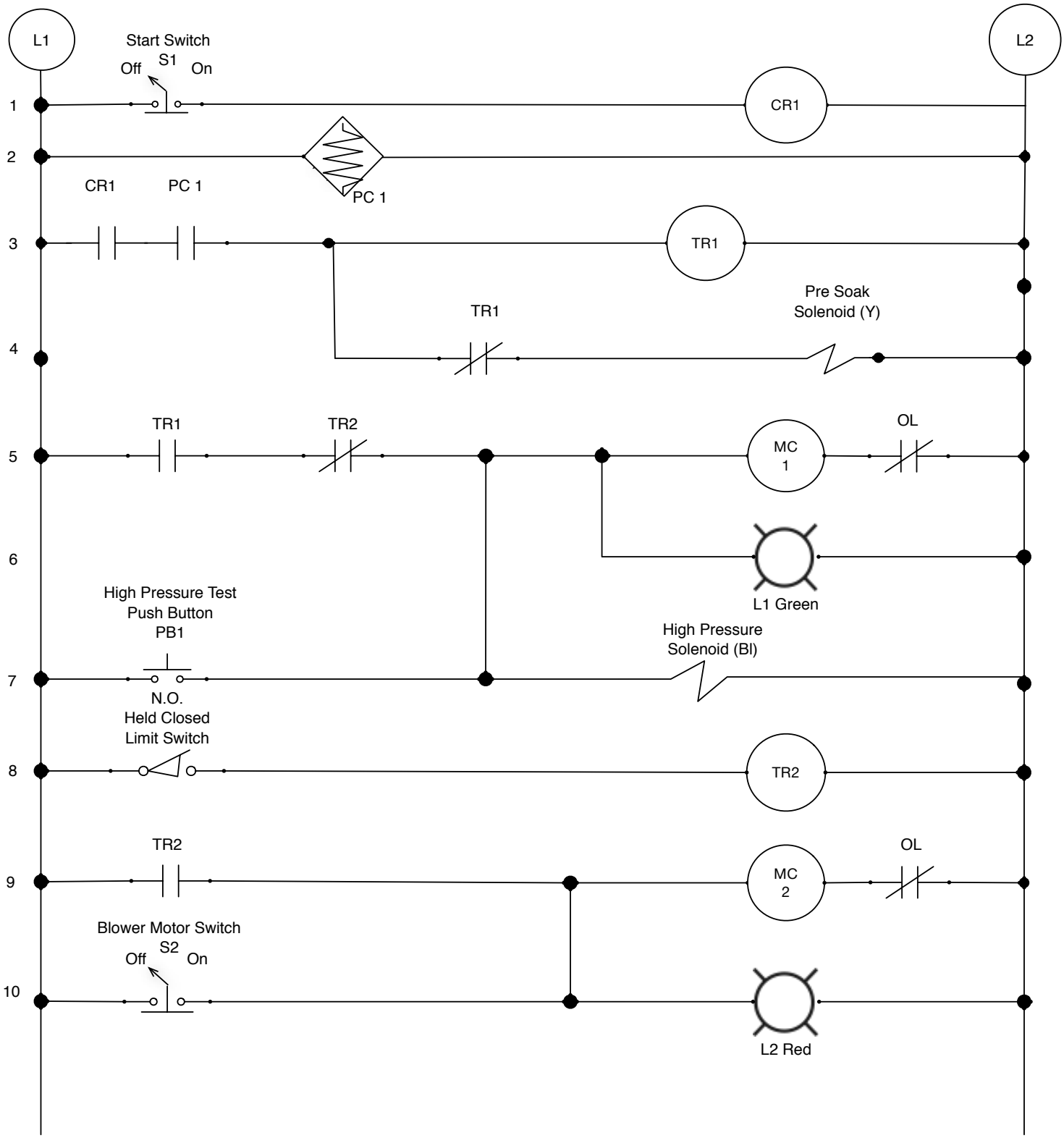
L1
L2
Start Switch
S1
Off
On
CR1
CR1
PC 1
PC 1
TR1
TR1
Pre Soak
Solenoid (Y)
TR1
TR2
MC
1
OL
L1 Green
High Pressure Test
Push Button
PB1
High Pressure
Solenoid (Bl)
N.O.
Held Closed
Limit Switch
TR2
TR2
MC
2
OL
Blower Motor Switch
S2
Off
On
L2 Red
1
2
3
4
5
6
7
8
9
10

2015 Skills USA Industrial Motor Control
Car Wash Project

The wash tub manager has hired you to wire the control system for a new carwash facility.

Conditions:

When a selector switch is activated, it shall send a signal to start the prewired conveyor belt to pull the car forward. After the car reaches a certain distance, a photocell shall be activated to start the presoak solenoid. After five seconds, a timing relay will activate high pressure solenoid and *motor* #1. Once the car reaches a certain point, *motor* #1 and high pressure solenoid shuts off, and *motor* #2 activates for drying the car.

Customer Requirements: (work description)

Operation of Car Wash

- When selector switch #1 is turned on, control relay engages.
- Control relay activates photocell and timing relay #1.
- With photocell activated by a car, presoak solenoid and timing relay #1 engage.
- After *five* seconds timing relay #1 stops presoak while activating *motor* #1 and high pressure solenoid.
- A green indicator light comes on when *motor* #1 is running.
- When car is on limit switch plate, it activates timing relay #2 for *ten* seconds.
- Blower *motor* #2 engages for as long as the car is on the pressure plate.
- A red indicator light comes on when *motor* #2 (Blower) is running.
- A *BLACK button* will be added to test *motor* #1 and high pressure solenoid when wash is not in normal operation.
- A selector switch is needed to test *motor* #2 (Blower) when car wash is not in normal operation.

20150623

Work Sheet **Contestant Number _____**

Page No._____ **Date:_____**

Customer Name: **2015 Skills USA Industrial motor control Competition** **Work Station_____**

Address:

Phone: **None**

Work Description:_____

_____

_____

Quantity	Item Description	Unit Cost	Total Cost	
	Total Additional Materials from Attached Pages			
	Total Materials			

Arrived on Job Site:	**Departed Job Site:**

Labor to be billed	Name	Hours (Regular)	Hours (Overtime)

I hereby acknowledge satisfactory completion of work as described.

Work approved by:_____ Date:_____

Continuation Sheet

Page ___ of ___ **Job Number_____**

Quantity	Item Description	Unit Cost	Total Cost	
	Total This Page			

Continuation Sheet

Page ___ of ___ **Job Number_____**

Quantity	Item Description	Unit Cost	Total Cost	
	Total This Page			

SPECIFICATIONS: Car Wash Project

1. The work area consists of a 4' x 6' 1/2 sheet of plywood.

2. All vertical measurements specified as AFF (Above Finished Floor) will be from the concrete floor. Horizontal measurements will be from the specified exposed edge of the sheet of plywood.

3. All work will be done using the 2014 NEC.

4. Installation must utilize minimum materials while still meeting all requirements.

5. All box and device mounting dimensions will be to the center of the box or device unless otherwise specified.

6. Power cord must be installed on the top side of control box utilizing a 1/2 knock out and must be secured with a 1/2'' romex connector.

7. Selector switch # 1 will be mounted on the right side of the control box, utilizing the first Knockout from the top.

8. Selector switch #2 will be mounted on the right side of the control box, utilizing the second knockout from the the top.

9. The momentary push button switch will be mounted on the right side of the control box, centered, utilize the third hole from the top.

10. An enclosure with a four hole indicator light cover will be vertically mounted 12'' from the right side of the control box and 70'' centered AFF.

11. 1/2'' liquid flexible conduit will be used to feed control wiring to the bottom of the four hole indictor light enclosure. (Not the side of the enclosure) On the right side of the control box, a round knockout will be utilized for the flex.

12. An amber indicator light will be used in the first hole, furthest to the raceway entry point, of the four hole enclosure in place of the presoak solenoid.

13. A green indicator light will be used when motor #1is activated in the second hole of the four hole enclosure.

14. A blue indicator light will be used in the third hole of the four hole enclosure in place of the high pressure solenoid.

15. A red indicator light will be used when motor #2 is activated in the fourth hole, closest to the raceway entry point, of the four hole enclosure.

16. Photocell enclosure will be mounted vertically 6'' center from the right side of the control box and 55'' center AFF. (The reflector plate will be used by the Judges)

17. SO cable will be used to feed control wiring to the photocell enclosure. A 1/2'' knockout will be utilized from the bottom of control box.

18. A limit switch will be mounted 24'' AFF and 30'' from the right side of the wall.

19. 1/2 liquid flexible nonmetallic tubing (LNFC) will be used to connect the limit switches to the control enclosure.

20. Motor #1 will be mounted 24" AFF and 40" from the right side of the wall and center of the mounting base. A keyless light fixture and lamp will be used to represent motor #1.

21. 14-3 - 3/8 MC Cable will be used to connect Motor #1.

22. Motor #2 will be mounted 18" AFF and 36" from the right side of the wall. A keyless light fixture and lamp will be used to represent motor #2.

23. 14-3- 3/8 MC cable will be used to connect Motor #2

24. The job is not complete until the Job Work Sheet is filled out.

i

20150623

Industrial Motor Control

Conduit Bending: Download the Publisher files

2015
Industrial Motor Control

Oral Professional Assessment

Secondary _____

Post-Secondary _____

Contestant Number _____

Judges' Oral Professional Assessment Score Sheet
2015 **SkillsUSA Industrial Motor Control Competition**

Contestant Number _____

The undersigned affirms that the following topics were discussed during the verbal interview process.

In the electrical field:

Reason(s) for interest
Education
Training
Experience

Educational plans:

Knowledge / interest in apprenticeship
Technical / vocational plan(s)
Possible collegiate interests

Training & Skills Assessment

Important skills acquired to date
Important skills / knowledge learned exclusively in SkillsUSA
Suggested improvements to training received to date
Further areas would like to investigate

Career Goals (10 years from now)

Working in what field
Located in what area of the country
Job title / description

****

Judge's Notes:

Points Awarded (Maximum of 60) _____

Judge Name (printed):_____ **Judge Number:**_____

Judge Signature:_____

Judges' Secondary Interview Score Sheet
2015 SkillsUSA Industrial Motor Control Competition

Contestant Number _____

The undersigned affirms that the following topics were discussed during the verbal interview process.

In the electrical field:

Reason(s) for interest
Education
Training
Experience

Educational plans:

Knowledge / interest in apprenticeship
Technical / vocational plan(s)
Possible collegiate interests

Training & Skills Assessment

Important skills acquired to date
Important skills / knowledge learned exclusively in SkillsUSA
Suggested improvements to training received to date
Further areas would like to investigate

Career Goals (10 years from now)
Working in what field
Located in what area of the country
Job title / description

****

Judge's Notes:

Points Awarded (Maximum of 60) _____

Judge Name (printed):_____ **Judge Number:**_____

Judge Signature:_____
06-15-2015

Judges' Post-Secondary Interview Score Sheet
2015 SkillsUSA Industrial Motor Control Competition

Contestant Number _____

The undersigned affirms that the following topics were discussed during the verbal interview process.

In the electrical field:

Reason(s) for interest
Education
Training
Experience

Educational plans:

Knowledge / interest in apprenticeship
Technical / vocational plan(s)
Possible collegiate interests

Training & Skills Assessment

Important skills acquired to date
Important skills / knowledge learned exclusively in SkillsUSA
Suggested improvements to training received to date
Further areas would like to investigate

Career Goals (10 years from now)
Working in what field
Located in what area of the country
Job title / description

****

Judge's Notes:

Points Awarded (Maximum of 60) _____

Judge Name (printed):_____ **Judge Number:**_____

Judge Signature:_____
06-15-2015

SkillsUSA
2015 Contest Projects

Internetworking

Click the “Print this Section” button above to automatically print the specifications for this contest. Make sure your printer is turned on before pressing the button.

SkillsUSA 2015 **Station Number_____**

Cable Making and Wireless Configuration (150 Points)

Goal: Connect from your laptop to the wireless access point and then configure the AP.

You will:

1. Make a patch cable
2. On port one of your punch down panel use 586A code and punch down the cable then take the other end of the cable and punch down on port 12 a 586B code
3. Plug your laptop into the port one of your patch panel using the cable you made from part 1. Then decide upon what type of cable you will need to connect port 12 to the wireless access point for configuration on step 4.
4. Configure the AP with the following:
    a. SSID = Skills + Station number (station number Example: Skills1)
    b. Change the channel to your station number
    c. Set the wireless security to WPA2-PSK pass phrase: cisco123
    d. Set admin password to cisco + station number
5. Unplug from the patch panel, configure your wireless to connect to your AP via the wireless

Example of what it might look like:

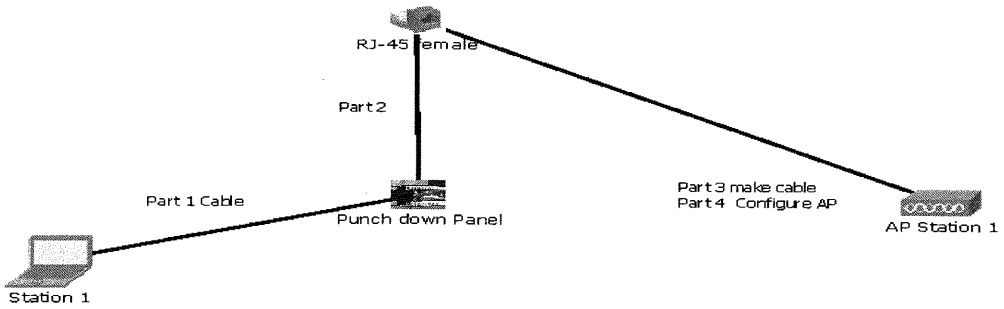

Part 5 Connect to wireless AP via wireless configuration

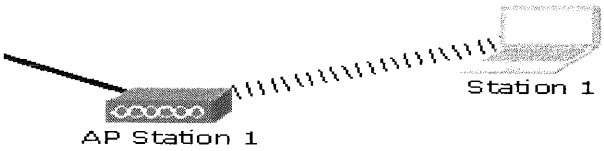

Judging Sheet Cable/Wireless Contestant Number _____

a. Patch Cable (40 points) Points_____
    a. 15 points quality of termination per end
        i. End pushed up
        ii. Cord cut off
        iii. Pull test/insulation crimped
    b. 10 points pasts the cable test
b. Punchdown (30 points) Points_____
    a. 10 points quality of termination per end
        i. Insulation in middle of patch
        ii. Correct code followed
    b. Cable test for crossover (10 points) Points_____
c. Connecting to AP via cable (60 point) Points_____
    a. 10 points)Select X-over cable
    b. 10 SSID = Skills + (station number Example: Skills1)
    c. 10 Change the channel to your station number
    d. 10 Set the wireless security to WPA2-PSK pass phrase: cisco123
    e. 10 Set admin password to cisco + station number
d. Connecting to AP via wireless. (20 points) Points_____
    a. 10 for SSID
    b. 10 Authentication

Total _____

Script to be used for 2015 National TAC Contest

Phone call to support Desk List the Telephone Number _____
Callers name is _____
My company name is **ACME Power and Light**
Telephone number is _____
You're calling the support desk of **Skilled Routing INC**

The problem:

Judge says, "I need help, when I came back from vacation they had changed my laptop network connection from wireless to wired for security reasons. Also for security reasons I was given a permanent IP address rather than getting an automatic one like when I was connecting wirelessly. But today I am unable to connect to the network. Can you help me?"

Answer to the problem.
The IP address of the laptop is not in the same network with the default gateway. This might have been mistyped during configuration.

1. They should ask for your name and call back number first
2. The contestant should ask what is the operating system.

    a. You Answer
    b. Windows 7

3. They then should ask you to type into the search window Command Prompt
4. Click on the Command.exe link
5. They should have you then type ipconfig /all
6. They should then ask you for your IP Settings

    a. You Answer
    b. You answer IP address 192.168.5.18
    c. Subnet mask 255.255.255.240
    d. Default gateway 192.168.5.1
    e. DNS Server 192.168.5.2

7. They should analyze the IP scheme.
8. They should state that the address of the laptop is not in the same network as the default gateway.
9. They should then ask you to either right click on the networking icon on the task bar or go to the network icon in the control panel. They then need to select local area network properties, Click on the IP V4 properties and ask you to make the changes.
10. They should then ask you if it works
11. They should ask if there is any other items they could help you with before hanging up

Use the judging sheet to record the scores. The contestant only gets **4** minutes to solve your problem.

Technical Assistant Center Phone Call Judging Sheet Contestant _____

Task	Configuration Line	Possible Points	Points Earned
Asked for Company Name		5	
Ask for Individuals name		5	
Asked for a call back number		5	
Ask for Operating system	**Windows 7**	5	
Go to Command prompt		5	
Ask for Branch PC 1 network configuration	**PC address/Gateway**	5	
Wrong IP for DNS and Gateway	**Correct gateway 192.168.5.1** **Correct PC IP 192.168.5.3-14**	10	
Assists with network config	**Multiple ways to get to settings**	10	
Has you make changes	**ipconfig to verify**	5	
Verifies that you can now go to the server	**Open PC browser and go to Google.com or ping gateway**	5	
Asks if you need more help		5	
	Total Possible Points	65	

Speaking Skills				
	Excellent 2	Good 1	Bad 0	Points Earned
Volume				
Speed				
Tonal Quality				
Style				
Enunciation				
			(10 possible) Total Points	

Answering the Phone				
	Excellent 2	Good 1	Bad 0	Points Earned
Answers by the 2nd or 3rd ring				
Greeting				
Identification of Self				
Customer Identification				
Listening				
			(10 possible) Total Points	

Solving the Customer Problem				
	Excellent 2	Good 1	Bad 0	Points Earned
Diagnostic Questions				
Orientation with Customer				
Isolate the Problem				
Being Honest(I don't know)				
Contestants Knowledge				
Offer a Solution				
Customer Closes Call				
Bonus Point (if they solve the problem)				
			(15 possible) Total Points	

(100 possible) Total Points all Three Sections	

Station #: _____ Contestant #: _____

	score	max
dhcp default router set to 192.168.1.1 *default-router 192.168.1.1*	_____	15
nat outside on gig0/0	_____	5
nat inside on gig0/1	_____	5
NAT - access-list fixed *access-list 7 permit 192.168.1.0 0.0.0.255*	_____	15
NAT - ip nat pool statement fixed *ip nat pool int x.0.0.2 x.0.0.2 prefix-length 8*	_____	15
OSPF Enabled *router ospf x*	_____	15
OSPF advertising /8 pod subnet *network X.0.0.0 0.255.255.255 area 0*	_____	15
72 network found in routing table *sh ip route*	_____	25
port security removed or modified to allow connection to PC	_____	15
vlans on fa0/1 and gig0/1 are the same vlan - or router on a stick	_____	15
Website IP discovered	_____	25
Sub-Total	_____	165
or		
Website up on computer - 100% completion	_____	200
Total	_____	200

Judge Name: Vernon Depee

Judge Signature:_____

Contestant ID:_____ Station #:_____

Background:

Your company (SkillsUSA) has recently acquired another company (SkillsLouisville). The newly acquired employees need access to a corporate web server hosted in SkillsUSA's main office. The on-site network engineer for SkillsLouisville attempted to setup the Internet connection, but it seems the configuration was not properly done. An emergency came up and the engineer is no longer available. You have been deployed to finish the configuration.

Goal:

Your goal is to access the web server from your computer while connected through your switch and router. When this has been done, bring up the page on your browser and let the proctor know.

If you have discovered the IP address of the web server, write that address here:

IP Address of Web Server:_____

Notes:

There is useful information in the network. Keep this in mind before making changes.

Your ISP has assigned you a single public static IP address. The IP address and subnet mask is set on your router gig0/0. It is the correct IP and mask.

Your ISP will advertise routes to you via a non-proprietary link-state routing protocol. Static routes from your router to the Internet will not work.

Gig0/0 must connect to the patch panel. One of the ports on the patch panel connects to the ISP.

Somewhere in the network is a web server. A small subnet is being advertised via the previously mentioned routing protocol. The web server is in that subnet.

Ignore the numbers written on your patch panel. They will not be used this year.

Resume Rubric

Function
4 Audience and Purpose are strong and clear.
3 Could be stronger.
2 Less clear – weak parts.
1 Not clear.

Form and Content
4 Format is clear and includes objective, names, dates in chronological order and locations.
3 Mostly clear.
2 Format is confusing and missing some major sections.
1 Format is hard to see.

Effectiveness
4 Professional appearance, tone, and style.
3 Some inconsistencies remain.
2 Less professional appearance, tone, and style, several weaknesses.
1 Does not have professional appearance, tone, or style. Needs revision.

Grammar and Mechanics
4 Follows all guidelines for spelling and grammar. Sentences are strong and have varied structure.
3 Some sentences are unclear, uneven, or have errors.
2 Multiple errors, difficult to understand.
1 Most sentences contain numerous errors.

Cover Letter Rubric

Function
4 Audience and purpose are strong and clear.
3 Could be stronger.
2 Has some weak parts.
1 No clear audience or purpose.

Format and Content
4 Includes address, date, saluation, body, closing signature.
3 Mostly clear.
2 Confusing and missing information.
1 Major sections missing.

Effectiveness
4 Professional appearance, tone, and style.
3 Some inconsistencies.
2 Less professional, missing information.
1 Does not have professional appearance, needs much revision.

Grammar and Mechanics
4 Good grammar, spelling, sentences are strong and varied.
3 Some sentences are unclear or have a few errors.
2 Sentences contain multiple errors.
1 Most sentences contain numerous errors.

Contestant Number_____ Station ID_____

SkillsUSA Nationals Skills Contest

During the course of this skills contest, you must perform a series of configuration tasks to ensure that internal and external network connectivity is established. The following documentation describes the configuration tasks necessary to achieve full network functionality.

NOTE: All testing will take place via ssh or telnet from the Student PC. Network connectivity for the PC must be established to ensure full grading can take place.

IP Addressing

Network	Requirements	Subnet
VLAN 10	1500 hosts	172.31.8.0/21
VLAN 20	500 hosts	172.31.2.0/23
VLAN 30	60 hosts	172.31.0.64/26
VLAN 40	30 hosts	172.31.0.32/27
VLAN 100	254 hosts	172.31.100.0/24
Internal Serial link	2 hosts	172.31.0.0/30
VLAN 55 Management VLAN	3 hosts	192.168.100.0/24

Router Configurations

Basic Configuration:

- Cable as shown in the diagram
- Hostnames as shown in the diagram
- Console and VTY password: skillsnat
- Enable Secret password: natskills
- Banner motd set to: "These are Not the Routers You are Looking For!! Move Along"
- All passwords must be encrypted

Int Configuration:

- Internal subinterfaces created to support internal VLAN structure shown in Switch Configuration section.

- Set the clock rate on S0/0/0 to 8000000
- Configure OSPF for routing for all IPv4 networks except for the network connected to the ISP; specify subnet addresses—DO NOT advertise the ISP network via OSPF
- Configure a default route to the ISP
- Advertise the default route into OSPF
- OSPF MD5 authentication with Int using password of skills
- Configure PAT on S0/0/0 for all internal IP addresses
- Configure GRE Tunnel on Gi0/0 for future multicast traffic to ISP
    - Create tunnel 0 using gre ip mode
    - Set tunnel destination to ISP IP
    - Set tunnel IP address to 131.107.x.2/30 (where x is your station ID)
- Configure interface GigabitEthernet 0/0 for IPv6 using addresses in chart. Allow routing of IPv6.

Switch Configurations

Basic Configuration:

- Cable as shown in the diagram
- Hostnames as shown in the diagram
- Console and VTY password: skillsnat
- Enable Secret password: natskills
- Banner motd: "These are Not the Switches You are Looking For!! Move Along"
- All passwords must be encrypted
- Switches must be able to communicate via the management VLAN which is VLAN 55
    - SW1 192.168.100.2/24
    - SW2 192.168.100.3/24
- Gateway configured correctly

Etherchannel Configuration:

- PagP etherchannel configured using ports Gi0/5, Gi0/6, Gi0/7
- Etherchannel configured to support trunking

- Port security should be set on SW2 Gi0/1. Allow 3 maximum MAC addresses. Port violation mode should be protect. Ensure MAC addresses used for security are learned dynamically
- Tftp a copy of Int's startup-config to the Tftp server on the Windows Server at 10.102.61.253 with the name ContestantxINT.cfg

Open a web browser on the student PC and connect to netlabs.natskills.com or 10.102.61.222. Login with a username of studentx (where x is your station ID) and a password of P@ssw0rd. If prompted to perform a port test, you MUST perform the test for the system to work. Click on the Windows Server box to begin server configuration below.

Server 2012 R2 configuration:

- Login is administrator with a password of P@ssw0rd
- Configure static IP address of 192.168.12.10/24, default gateway 192.168.12.1, and DNS server of 192.168.12.10. Note: It may be necessary to reboot the server after changing the IP address to allow the installation wizard to verify the change.
- Install the DNS service
  - Create an A record pointing www.natskills.com to 10.10.10.254
- Install Active Directory Services
  - Domain name of natskills.com
  - Install the domain with Windows 2012nat R2 functional level
  - All passwords set to P@ssw0rd
  - If prompted to change your password, change the password to P@ssw0rdx where x is your station ID
- Install DHCP
  - Create a scope named natskills
  - Use the range of IP addresses of 192.168.12.100/24 to 192.168.12.150/24
  - Configure the default router to 192.168.12.1
  - Configure DNS server to 192.168.12.10
  - Configure domain name to natskills.com
- Create an Organizational Unit named natskills

- Create the following users in the natskills OU:

Users	Password	Attributes
student1, student2, student3, student4, student5	P@ssw0rd	
marketing1, marketing2, marketing3, marketing4, marketing5	P@ssw0rd	

Admin User

SkillsUSA National Testing Site-2015

Home ► My courses ► Internetworking ► Nationals SkillsUSA 2015 ► Topic 2 ► Packet Tracer Exam ► Preview

Information

Flag question

Edit question

Download the practical skills Packet Tracer activity by clicking on this link (Packet Tracer Activity). Save the file to your desktop. Rename the file using your first initial of your first name followed by your surname. Then open the file and begin. You have 60 minutes to complete the activity and answer the 15 questions on this exam. Work through the questions at the same time you are working on the Packet Tracer activity.

Question 1

Not yet answered

Marked out of 6.00

Flag question

Edit question

Match the Cisco Command line to the correct interface.

ip address 192.168.0.2 255.255.255.240 ! ip default-gateway 192.168.0.1	Choose...
switchport access vlan 30	Choose...
switchport access vlan 10	Choose...
interface FastEthernet0/0.1 encapsulation dot1Q 10 ip address 192.168.1.1 255.255.255.0	Choose...
switchport mode trunk	Choose...
ip dhcp pool VLAN30 network 192.168.3.0 255.255.255.0 default-router 192.168.3.1 dns-server 216.100.100.100	Choose...

Question 2

Not yet answered

Marked out of 6.00

Name the design practice that is not being used in the Packet Tracer Activity.

Flag question

Edit question

Select one:

- a. There should be an empty port between each VLAN on the switch.
- b. QoS should be configured for VLAN 20 only.
- c. The design is good there are no errors.
- d. The VOIP phones should all be on the same VLAN.
- e. More IP numbers should be used to protect the network from hackers.

Question 3

Not yet answered

Marked out of 6.00

Flag question

Edit question

Look at the following command lines. What line has an error that would cause the PCs not to connect to www.MyPod.com

```
ip dhcp pool VLAN10
 network 192.168.1.0 255.255.255.0
 default-router 192.168.1.1
 dns-server 216.100.100.100
ip dhcp pool VLAN20
 network 192.168.2.0 255.255.255.0
 default-router 192.168.2.1
 dns-server 216.100.100.100
ip dhcp pool VLAN30
 network 192.168.3.0 255.255.255.0
 default-router 192.168.3.1
 dns-server 216.100.100.101
```

Select one:

- a. default-router 192.168.2.1
- b. dns-server 216.100.100.100
- c. dns-server 216.100.100.101
- d. network 192.168.2.0 255.255.255.0
- e. ip dhcp pool VLAN10

Question 4

Not yet answered

Marked out of 6.00

Flag question

Edit question

Name the protocol that allows sub-interfaces to be used on a Cisco router.

Answer:

Question 5

Not yet answered

Marked out of 6.00

Flag question

Edit question

Assume you are on the correct port of the switch configuration command line. Write the command line that allows the port to be a trunk port.

(Note: single line only no not need actual port in front of command)

Answer:

Question 6

Not yet answered

Marked out of 6.00

Flag question

Edit question

What command line would deliver the following results?

% Warning: It is recommended to configure VLAN from config mode, as VLAN database mode is being deprecated. Please consult user documentation for configuring VTP/VLAN in config mode.

Select one:

- a. vtp vlan database
- b. interface vlan2
- c. vlan database
- d. show vlan

Question 7

Not yet answered

Marked out of 6.00

Flag question

Edit question

Which device would have a default gateway of 192.168.0.1?

Select one:

- a. IPphone 2
- b. Printer 1
- c. Switch 2
- d. PC 2
- e. Switch 1

Question 8

Not yet answered

Marked out of 6.00

Flag question

Edit question

According to the activity you need to exclude some addresses. Select the command lines that would be the proper lines to do what is asked in the activity.

Select one or more:

- a. ip dhcp excluded-address 192.168.1.1 192.168.1.10
- b. ip dhcp excluded-address 192.168.2.1 192.168.2.10
- c. ip dhcp excluded-address 192.168.3.1 192.168.3.10

- [ ] d. ip dhcp excluded-address 192.169.3.1 192.169.3.10
- [ ] e. ip dhcp excluded-address 192.168.4.1 192.168.4.10

Question 9

Not yet answered

Marked out of 6.00

Flag question

Edit question

What is the biggest security problem with the networking devices in the Packet Tracer activity?

Select one:

- ○ a. PCs need static IPs not DHCP
- ○ b. Printers should all have static IPs
- ○ c. No passwords used on the router and switches
- ○ d. VLSM is not being used
- ○ e. RIP is not a strong enough routing protocol

Question 10

Not yet answered

Marked out of 6.00

Flag question

Edit question

Type the command line that would allow sw0 to be the vtp server? Assume you are already in vlan mode.

Answer:

Question 11

Not yet answered

Marked out of 6.00

Flag question

Edit question

How many broadcast domains are being used on the initial network?

Answer:

Question 12

Not yet answered

Marked out of 6.00

Flag question

Edit question

You have been asked to add a Linksys wireless router to VLAN 30. Match the information that would be needed to make this connect to the designated VLAN.

LAN network of the Linksys router. (Default Choose...

Internet port of the Linksys router Choose...

Wireless network of the Linksys router (Default) Choose...

Gateway of the Linksys router Choose...

DNS server for the Linksys Router Choose...

Question 13

Not yet answered

Marked out of 6.00

Flag question

Edit question

What command line created this read out?

VTP Version : 2
Configuration Revision : 0
Maximum VLANs supported locally : 255
Number of existing VLANs : 8
VTP Operating Mode : Client
VTP Domain Name :
VTP Pruning Mode : Disabled
VTP V2 Mode : Disabled
VTP Traps Generation : Disabled
MD5 digest : 0x7D 0x5A 0xA6 0x0E 0x9A 0x72 0xA0 0x3A
Configuration last modified by 0.0.0.0 at 0-0-00 00:00:00

Select one:

- a. Switch#(vlan)sh vtp counters
- b. Switch#sh vtp counters
- c. Switch#sh vtp password
- d. Switch#(vlan)sh vtp vlan 30
- e. Switch#(vlan)sh vtp status
- f. Switch#sh vtp status

Question 14

Not yet answered

Marked out of 6.00

Flag question

Edit question

You are asked to create a default route on the router.
Copy and paste the router configuration line that you would use.

Answer:

Question 15

Not yet answered

Take the original number of broadcast domains of the initial network add that number to the number of broadcast domains after the network has

Marked out of 6.00

Flag question

Edit question

been configured without a wireless router. Then add the number of straight through cables used and subtract the number of cross over cables. What is the number you get?

Select one:

- a. 17
- b. 15
- c. 7
- d. 2
- e. 11
- f. 13

Next

QUIZ NAVIGATION

i 1 2 3 4 5 6 7 8 9 10 11 12 13 14 15

Finish attempt ...

Start a new preview

NAVIGATION

Home

- My home
  - Site pages
  - My profile
  - Current course
    - Nationals SkillsUSA 2015
      - Participants
      - Badges
      - General
      - Topic 1
      - Topic 2
      - **Packet Tracer Exam**
      - Packet Tracer Activity

Admin User

SkillsUSA National Testing Site-2015

Home ► My courses ► Internetworking ► Nationals SkillsUSA 2015 ► Topic 1 ► SkillsUSA Exam -2015 ► Preview

Question 1

Not yet answered

Marked out of 2.00

Flag question

Edit question

Create an access list that will prevent only the host 192.5.5.148 from accessing a web site located at 210.93.105.50.

Select one:

- a. access-list 10 deny tcp host 192.5.5.148 host 210.93.105.50 eq 80 access-list 10 permit tcp any any
- b. access-list 10 deny tcp 192.5.5.148 0.0.0.0 210.93.105.50 0.0.0.0 eq 23 access-list 10 permit tcp any any
- c. access-list 100 deny tcp 192.5.5.148 0.0.0.0 210.93.105.50 0.0.0.0 eq 80 access-list 100 permit tcp any any
- d. access-list 100 deny tcp host 192.5.5.148 255.255.255.255 210.93.105.50 255.255.255.255 eq 80 access-list 100 permit tcp any any

Question 2

Not yet answered

Marked out of 1.00

Flag question

Edit question

An access list has been created that will deny the host 204.204.7.89 access to an ftp server located at 196.6.13.254.

The host is off R2's FA0/1 LAN. The ftp server is off R3's FA0/1 LAN. R2 and R3 connect via their FA0/0 interfaces.

- access-list 111 deny tcp 204.204.7.89 0.0.0.0 196.6.13.254 0.0.0.0 eq 21
- access-list 111 deny tcp 204.204.7.89 0.0.0.0 196.6.13.254 0.0.0.0 eq 20
- access-list 111 permit tcp any any
-
- Which of the following groups of commands will place this ACL in the proper location?

Select one:

- a. Router3(config)interface fa0/0 Router3(config-if)# ip access-group 111 out

- b. Router3(config)interface s0/1 Router3(config-if)# ip access-group 111 out
- c. Router3(config)interface fa0/0 Router3(config-if)# ip access-group 111 in
- d. Router2(config)interface fa0/0 Router2(config-if)# ip access-group 111 out

Question 3

Not yet answered

Marked out of 1.00

Flag question

Edit question

What do routers use to select the best path for outgoing data packets?

Select one:

- a. ARP tables
- b. routing tables
- c. bridging tables
- d. switching tables

Question 4

Not yet answered

Marked out of 2.00

Flag question

Edit question

To obtain CDP information from a Cisco router that is not directly connected to the administrator's console, what must happen?

Select one:

- a. The source router must send TLV blocks to the remote router.
- b. The administrator can Telnet to a Cisco device that is connected to the remote router.
- c. The administrator needs to issue the Router
- d. The administrator must transmit TTL packets to the remote device and wait for a response.

Question 5

Not yet answered

Marked out of 1.00

Flag question

Edit question

Classless routing protocols perform the following functions: (Choose 3)

Select one or more:

- [ ] a. Send subnet mask information in routing updates
- [ ] b. Support variable-length subnet mask (VLSM) because of the inclusion of the mask in routing updates
- [ ] c. process switching
- [ ] d. Support designs that include discontiguous networks
- [ ] e. fast forward switching

Question 6

Not yet answered

Marked out of 1.00

Flag question

Edit question

What is the purpose of a default route?

Select one:

- a. A default route will cause packets addressed to known destinations to prefer a specified path to the destination network.
- b. A default route will cause packets addressed to unknown destination networks to be dropped.
- c. A default route will cause packets addressed to unknown destination networks to be sent to a designated router interface.
- d. A default route will direct packets for all destination networks to a designated router and router interface.

Question 7

Not yet answered

Marked out of 2.00

Flag question

Edit question

The goal of an internetwork designer is to design a cost-effective, scalable, working network. What is the first step when designing a small to medium sized internetwork?

Select one:

- a. Develop a logical diagram of existing network.
- b. Evaluate traffic-intensive applications.
- c. Identify the customer's needs.
- d. Identify the network load requirements.

Question 8

Not yet answered

Marked out of 1.00

Flag question

Edit question

Several web and email servers have recently been installed as part of an enterprise network. The security administrator has been asked to provide a summary of security features that can be implemented to help prevent unauthorized traffic from being sent into or out of sensitive internal networks. Which three features should the security administrator recommend? (Choose three.)

Select one or more:

- a. 128-bit WEP
- b. access control lists
- c. DHCP
- d. intrusion detection systems

- [ ] e. priority queuing
- [ ] f. firewalls

Next

QUIZ NAVIGATION

1 2 3 4 5 6 7 8 9 10 11 12 13 14 15 16 17 18 19 20 21 22
23 24 25 26 27 28 29 30 31 32 33 34 35 36 37 38 39 40 41 42 43 44
45 46 47 48 49 50 51 52 53 54 55 56 57 58 59 60 61 62 63 64 65 66
67 68 69 70

Finish attempt ...

Start a new preview

NAVIGATION

Home
- My home
  - Site pages
  - My profile
  - Current course
    - Nationals SkillsUSA 2015
      - Participants
      - Badges
      - General
      - Topic 1
      - **SkillsUSA Exam -2015**
      - Topic 2
  - My courses

ADMINISTRATION

- Quiz administration
  - Edit settings

Admin User

SkillsUSA National Testing Site-2015

Home ► My courses ► Internetworking ► Nationals SkillsUSA 2015 ► Topic 1 ► SkillsUSA Exam -2015 ► Preview

Question 9

Not yet answered

Marked out of 2.00

Flag question

Edit question

The design of an IP telephony system needs to meet the technical requirements to provide a connection to the PSTN as well as provide high-quality voice transmissions using the campus network. Which two elements directly affect the ability of the design to meet these requirements? (Choose two.)

Select one or more:

- ☐ a. voice-enabled firewall
- ☐ b. voice-enabled router at the enterprise edge
- ☐ c. redundant backbone connectivity
- ☐ d. PoE switches and patch panels
- ☐ e. separate voice and data VLANs with QoS implemented

Question 10

Not yet answered

Marked out of 1.00

Flag question

Edit question

In addition to the equipment considerations, what other major factor is used to evaluate the success of a network installation?

Select one:

- ○ a. maintenance costs
- ○ b. user satisfaction
- ○ c. statistics describing the performance of network devices
- ○ d. final project costs

Question 11

Not yet answered

Marked out of 2.00

Flag question

Edit question

What design strategy should be followed when designing a network that uses video on demand?

Select one:

- ○ a. configure queuing in the core routers to ensure high availability

- b. implement different QoS queues based on the type of video traffic being distributed
- c. implement the appropriate routing protocol to ensure that data segments arrive in order
- d. install servers to store the data in a centrally located server farm

Question 12

Not yet answered

Marked out of 1.00

Flag question

Edit question

When implementing QoS in traffic queues, what is the first step the designer should take to ensure that traffic is properly prioritized?

Select one:

- a. identify traffic requirements
- b. define traffic classes
- c. define QoS policies
- d. identify networking equipment
- e. determine traffic patterns

Question 13

Not yet answered

Marked out of 2.00

Flag question

Edit question

Which two statements are characteristics of file transfer traffic flows? (Choose two.)

Select one or more:

- a. RTP should be used.
- b. Transfers are throughput intensive.
- c. Packets are small in size.
- d. Response-time requirements are low.
- e. Traffic is predictable.

Question 14

Not yet answered

Marked out of 1.00

Flag question

Edit question

Which two items can be determined by diagramming internal traffic flow? (Choose two.)

Select one or more:

- a. the areas where network congestion may occur
- b. the type of ISP services needed
- c. the location of VPN servers used to connect teleworkers
- d. locations where high-bandwidth connections are required

☐ e. the capabilities of end-user devices

Question 15

Not yet answered

Marked out of 2.00

Flag question

Edit question

Which two traffic types are examples of external traffic flows? (Choose two.)

Select one or more:

☐ a. A user in the IT department telnets to the core layer router.

☐ b. A user in the IT department telnets into the access layer switch.

☐ c. A user in marketing connects to the web server of a competitor.

☐ d. A user in accounting connects to an FTP server that is connected to the access layer switch.

☐ e. A user in the services department logs in to a web-based email program.

Question 16

Not yet answered

Marked out of 2.00

Flag question

Edit question

Refer to the image. If ACL 150 identifies only voice traffic from network 192.168.10.0/24 and no other traffic, which queue will voice traffic from other networks use?

```
Router_A(config)# priority-list 1 protocol ip high list 150
Router_A(config)# priority-list 1 protocol ip normal tcp ftp
Router_A(config)# priority-list 1 protocol ip medium tcp telnet
Router_A(config)# priority-list 1 protocol ip low udp 53
Router_A(config)# interface serial 0/0/0
Router_A(config-if)# priority-group 1
```

Select one:

○ a. default

○ b. medium

○ c. normal

○ d. high

Question 17

Not yet answered

Marked out of 1.00

Flag question

Edit question

Refer to the image. After configuring QoS, a network administrator issues the command show queueing interface s0/1. What two pieces of

information can an administrator learn from the output of this command?

(Choose two.)

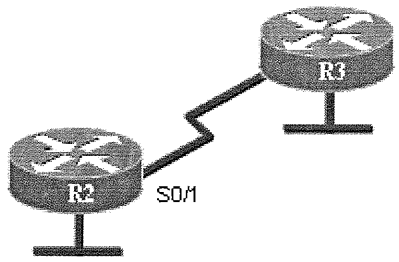


```
R2# show queueing interface s0/1
Interface Serial0/1 queueing strategy: priority

Output queue utilization (queue/count)
high/0 medium/0 normal/0 low/0
```

Select one or more:

- ☐ a. priority list protocol assignments
- ☐ b. queue traffic definitions
- ☐ c. queuing has not been applied to this interface
- ☐ d. type of queuing being implemented
- ☐ e. number of packets placed in each queue
- ☐ f. queuing defaults that have been changed

Next

QUIZ NAVIGATION

1 2 3 4 5 6 7 8 9 10 11 12 13 14 15 16 17 18 19 20 21 22
23 24 25 26 27 28 29 30 31 32 33 34 35 36 37 38 39 40 41 42 43 44
45 46 47 48 49 50 51 52 53 54 55 56 57 58 59 60 61 62 63 64 65 66
67 68 69 70

Finish attempt ...

Start a new preview

NAVIGATION

Admin User

SkillsUSA National Testing Site-2015

Home ► My courses ► Internetworking ► Nationals SkillsUSA 2015 ► Topic 1 ► SkillsUSA Exam -2015 ► Preview

Question 18

Not yet answered

Marked out of 1.00

Flag question

Edit question

Which two network applications are most affected by network congestion and delays? (Choose two.)

Select one or more:

- ☐ a. live video webcasts
- ☐ b. IP telephony
- ☐ c. audio file downloads
- ☐ d. file archival and retrieval
- ☐ e. online banking services

Question 19

Not yet answered

Marked out of 2.00

Flag question

Edit question

A company is considering adding voice and video to the data networks. Which two statements are true if voice and video are added? (Choose two.)

Select one or more:

- ☐ a. More UDP-based traffic flows will be evident.
- ☐ b. PoE switches must be purchased.
- ☐ c. VPNs will most likely be implemented to protect the voice traffic.
- ☐ d. Response times will be increased even if QoS is implemented.
- ☐ e. QoS will most likely be implemented to prioritize traffic flows.

Question 20

Not yet answered

Marked out of 1.00

Flag question

Edit question

What two Cisco tools can be used to analyze network application traffic? (Choose two.)

Select one or more:

- ☐ a. NBAR
- ☐ b. Wireshark

- ☐ c. AutoQoS
- ☐ d. NetFlow
- ☐ e. Custom Queuing

Question 21

Not yet answered

Marked out of 2.00

Flag question

Edit question

In network design, which technology can be implemented to prioritize traffic based on its importance and technical requirements?

Select one:

- ○ a. VPN
- ○ b. STP
- ○ c. QoS
- ○ d. RTP
- ○ e. TCP

Question 22

Not yet answered

Marked out of 1.00

Flag question

Edit question

What are two things that a network designer can do to determine current and anticipated network traffic flows? (Choose two.)

Select one or more:

- ☐ a. Conduct an inventory of all networking devices that includes model numbers and memory configurations.
- ☐ b. Survey end users to obtain customer input.
- ☐ c. Limit the analysis to host-to-server traffic because host-to-host traffic is unimportant.
- ☐ d. Run a network traffic analysis to determine which applications are in use and by whom.
- ☐ e. Upgrade the Cisco IOS software in all networking devices to optimize traffic flow.

Question 23

Not yet answered

Marked out of 2.00

Flag question

Edit question

A network engineer has decided to pilot test a portion of a new network design rather than rely on a prototype for proof-of-concept. What are two advantages of pilot testing a design concept? (Choose two.)

Select one or more:

- ☐ a. Network response can be tested in a highly controlled simulated environment.

- ☐ b. Unlikely failure conditions can be conveniently tested.
- ☐ c. Network response can be tested in unplanned and unpredictable situations.
- ☐ d. The test network experiences real-world network traffic.
- ☐ e. Users within the enterprise are not affected by the test.

Question 24

Not yet answered

Marked out of 1.00

Flag question

Edit question

Switch port Fa0/24 was previously configured as a trunk, but now it is to be used to connect a host to the network. How should the network administrator reconfigure switch port Fa0/24?

Select one:

- ○ a. Enter the no switchport mode trunk command in interface configuration mode.
- ○ b. Enter the switchport nonegotiate command from interface configuration mode.
- ○ c. Use the switchport mode access command from interface configuration mode.
- ○ d. Administratively shut down and re-enable the interface to return it to the default.
- ○ e. Use the switchport access vlan vlan number command from interface configuration mode to remove the port from the trunk and add it to a specific VLAN.

Question 25

Not yet answered

Marked out of 2.00

Flag question

Edit question

Total input and output errors on all interfaces must be less than 0.0000001 percent of all traffic.

Refer to the image. A network designer creates a test plan that includes the specification shown. In which section of the test plan would this specification be found?

Select one:

- ○ a. Design and Topology Diagram
- ○ b. Actual Results and Conclusions
- ○ c. Test Description
- ○ d. Anticipated Results and Success Criteria

○ e. Test Procedures

Question 26

Not yet answered

Marked out of 1.00

Flag question

Edit question

What OSI model Layer 2 security measure can a network engineer implement when prototyping network security?

Select one:

○ a. IP access control lists at the access design layer

○ b. port security at the access design layer

○ c. port security at the distribution design layer

○ d. a firewall at the network edge

Next

QUIZ NAVIGATION

1	2	3	4	5	6	7	8	9	10	11	12	13	14	15	16	17	18	19	20	21	22
23	24	25	26	27	28	29	30	31	32	33	34	35	36	37	38	39	40	41	42	43	44
45	46	47	48	49	50	51	52	53	54	55	56	57	58	59	60	61	62	63	64	65	66
67	68	69	70																		

Finish attempt ...

Start a new preview

NAVIGATION

Home

- My home
  - Site pages
  - My profile
  - Current course
    - Nationals SkillsUSA 2015
      - Participants
      - Badges
      - General

Admin User

SkillsUSA National Testing Site-2015

Home ► My courses ► Internetworking ► Nationals SkillsUSA 2015 ► Topic 1 ► SkillsUSA Exam -2015 ► Preview

Question 27

Not yet answered

Marked out of 2.00

Flag question

Edit question

Refer to the image. During prototype testing of the Cisco network shown, connectivity must be verified. Assuming all connections are working and CDP is enabled on all devices and interfaces, on which device was the command issued?

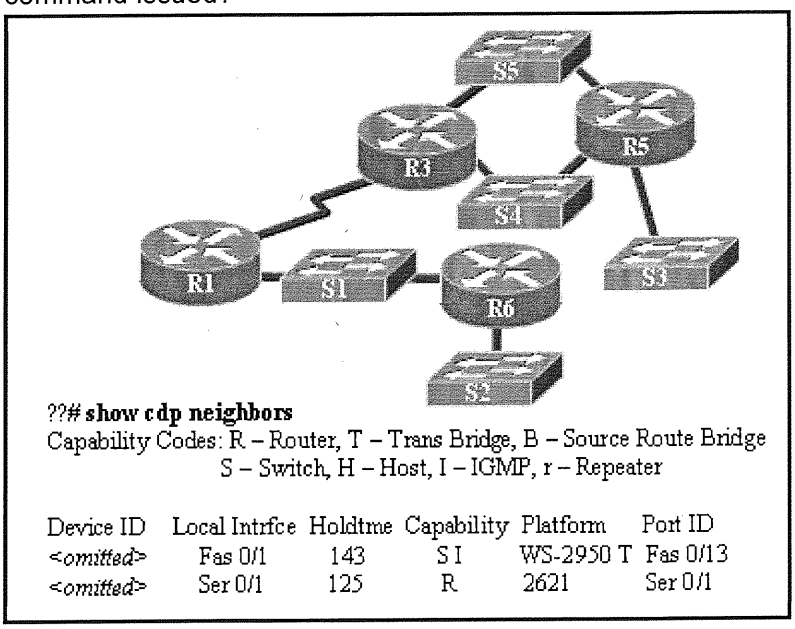

Select one:

- a. S3
- b. R5
- c. R1
- d. R3
- e. S1
- f. S2

Question 28

Not yet answered

Marked out of 1.00

Flag question

Edit question

```
Switch# ??

Port     Mode     Encapsulation Status     Native vlan
Fa0/1    on       802.1q        trunking   1
Fa0/2    on       802.1q        trunking   1

Port     Vlans allowed on trunk
Fa0/1    1-4094
Fa0/2    1-4094

Port     Vlans allowed and active in management domain
Fa0/1    1,10,20,30
Fa0/2    1,10,20,30

Port     Vlans in spanning tree forwarding state and not pruned
Fa0/1    1,10,20,30
Fa0/2    1,10,20,30
```

Refer to the image. During prototype testing, verification of VLAN connectivity is being performed. Based on the information shown, what command produced the output?

Select one:

- a. show interfaces trunk
- b. show cdp neighbors
- c. show ip interface brief
- d. show spanning-tree
- e. show interfaces

Question 29

Not yet answered

Marked out of 2.00

Flag question

Edit question

Which of the following tables does DUAL use to calculate the lowest cost routes to each destination?

Select one:

- a. neighbor table and adjacency table
- b. routing table and topology table
- c. neighbor table and routing table
- d. neighbor table and topology table

Question 30

Not yet answered

Marked out of 1.00

Flag question

While deleting the VLANs from a switch, a network administrator receives the following message, "A default VLAN may not be deleted". What did the administrator do to cause this message to be displayed?

Select one:

Edit question

- a. The no switchport mode access command was not properly entered.
- b. The no vlan 1 command was entered.
- c. The no vlan all command was entered.
- d. VTP was not configured
- e. The no vlan command was entered in database configuration mode.

Question 31

Not yet answered

Marked out of 2.00

Flag question

Edit question

What is indicated when an EIGRP route is in the passive state?

Select one:

- a. The route must be confirmed by neighboring routers before it is put in the active state.
- b. There is no activity on the route to that network.
- c. The route is viable and can be used to forward traffic.
- d. The route is a feasible successor and will be used if the active route fails.

Question 32

Not yet answered

Marked out of 1.00

Flag question

Edit question

Which of the following describes a physical full-mesh topology?

Select one:

- a. It requires termination at both ends of the cable.
- b. It provides maximum connectivity between all network systems.
- c. It links all computers to a main computer that controls all traffic on the network.
- d. It uses a hub or a switch as a central point to connect all wires.

Question 33

Not yet answered

Marked out of 2.00

Flag question

Edit question

Terminal emulation software, such as HyperTerminal, can be used to configure a router. Which of the following HyperTerminal options shown in the graphic are correctly set to allow configuration of a Cisco router?

Select one or more:

- a. Data bits/Flow Control/Stop bits
- b. Data bits/Parity/Bits per second

TOSSED QUESTION
Graphic didn't show

- ☐ c. Data bits/Parity/Stop bits
- ☐ d. no answer
- ☐ e. Flow control/Parity/Stop bits

Question 34

Not yet answered

Marked out of 1.00

Flag question

Edit question

How does ICMP improve data transfer reliability in IP networks?

Select one:

- ○ a. ICMP can correct many network problems as they occur.
- ○ b. Each router in the path reads ICMP packets and uses the information to update routing tables.
- ○ c. ICMP error messages are returned to the sending device when a packet is dropped by a router.
- ○ d. ICMP packets report the intermediary devices that a packet passed through before failure occurred. {

Question 35

Not yet answered

Marked out of 1.00

Flag question

Edit question

Which of the following are characteristics of IP?

Select one or more:

- ☐ a. connection-oriented protocol
- ☐ b. routing protocol
- ☐ c. connectionless protocol
- ☐ d. unreliable protocol

Next

QUIZ NAVIGATION

1	2	3	4	5	6	7	8	9	10	11	12	13	14	15	16	17	18	19	20	21	22
23	24	25	26	27	28	29	30	31	32	33	34	35	36	37	38	39	40	41	42	43	44
45	46	47	48	49	50	51	52	53	54	55	56	57	58	59	60	61	62	63	64	65	66
67	68	69	70																		

Finish attempt ...

Admin User

SkillsUSA National Testing Site-2015

Home ► My courses ► Internetworking ► Nationals SkillsUSA 2015 ► Topic 1 ► SkillsUSA Exam -2015 ► Preview

Question 36

Not yet answered

Marked out of 1.00

Flag question

Edit question

Which of the following describes latency?

Select one:

- a. the delay between the time a frame leaves its source device and reaches its destination
- b. the time required for a NIC to place a frame on the network media
- c. the degradation of a signal as it travels along the media
- d. the noise generated from outside a cable

Question 37

Not yet answered

Marked out of 2.00

Flag question

Edit question

Which devices must have a MAC address?

Select one:

- a. PC, hub, and router
- b. PC, printer, and router
- c. only PC
- d. PC and router

Question 38

Not yet answered

Marked out of 1.00

Flag question

Edit question

How can MAC address table entries be removed from a switch?

Select one:

- a. The clear switching-tables command will remove statically configured entries.
- b. The erase flash command will clear all statically configured table entries.
- c. Statically configured MAC addresses will automatically be removed from the address table 300 minutes after the last activity on a switch port.

○ d. The clear mac-address-table command will remove statically and dynamically configured table entries.

Question 39

Not yet answered

Marked out of 2.00

Flag question

Edit question

Router XYZ is to be added to OSPF area 0. Which of the following is the correct syntax for enabling OSPF on this router?

Select one:

○ a. XYZ(config)router ospf process 10

○ b. XYZ(config)router ospf 10

○ c. XYZ(config)router ospf processid 10

○ d. XYZ(config)router ospf process 0

Question 40

Not yet answered

Marked out of 1.00

Flag question

Edit question

Which type of message is generated by a host when the ping command is entered?

Select one:

○ a. UDP echo request

○ b. UDP error message

○ c. ICMP echo request

○ d. ICMP echo reply

Question 41

Not yet answered

Marked out of 2.00

Flag question

Edit question

What is the purpose of using port numbers in the transport layer?

Select one:

○ a. to identify the interface port number used by the router when forwarding data

○ b. to track multiple conversations that occur between hosts

○ c. to provide reliability during data transport

○ d. to identify the segment as being either TCP or UDP

Question 42

Not yet answered

Marked out of 1.00

A network administrator wants to assure that any password that permits access to the privileged EXEC mode is not shown in plain text in the configuration files. Which commands will accomplish this task?

Flag question

Edit question

Select one:

- a. Router(config)enable cisco
- b. Router(config)enable cisco secret
- c. Router(config)enable secret cisco
- d. Router(config)encrypt-all cisco

Next

QUIZ NAVIGATION

1	2	3	4	5	6	7	8	9	10	11	12	13	14	15	16	17	18	19	20	21	22
23	24	25	26	27	28	29	30	31	32	33	34	35	36	37	38	39	40	41	42	43	44
45	46	47	48	49	50	51	52	53	54	55	56	57	58	59	60	61	62	63	64	65	66
67	68	69	70																		

Finish attempt ...

Start a new preview

NAVIGATION

Home

- My home
  - Site pages
  - My profile
  - Current course
    - Nationals SkillsUSA 2015
      - Participants
      - Badges
      - General
      - Topic 1
      - **SkillsUSA Exam -2015**
      - Topic 2
  - My courses

Admin User

SkillsUSA National Testing Site-2015

Home ► My courses ► Internetworking ► Nationals SkillsUSA 2015 ► Topic 1 ► SkillsUSA Exam -2015 ► Preview

Question 43

Not yet answered

Marked out of 1.00

Flag question

Edit question

Which command turns on a router interface?

Select one:

- a. Router(config-if)no shutdown
- b. Router(config-if)interface up
- c. Router(config-if)enable
- d. Router(config-if)s0 active

Question 44

Not yet answered

Marked out of 1.00

Flag question

Edit question

Which is true about network security policies?

Select one:

- a. Security systems are designed to maximize the number of secrets-for example, password and encryption keys.
- b. A company having inflexible security policies is less vulnerable than a company with flexible policies.
- c. Security policies are based on understanding which company assets are most valuable.
- d. End users need to know nothing about the security measures.

Question 45

Not yet answered

Marked out of 1.00

Flag question

Edit question

Which network standards emerged from the IETF or OSI community to allow for interoperability of management across different network platforms?

Select one:

- a. SMI
- b. SNMP
- c. SMTP

- d. RMAN
- e. POP

Question 46

Not yet answered

Marked out of 1.00

Flag question

Edit question

What is the default read-only community string on SNMP enabled devices?

Select one:

- a. private
- b. public
- c. publish
- d. custom
- e. personal

Question 47

Not yet answered

Marked out of 1.00

Flag question

Edit question

Given the command, RouterC(config)# ip route 197.5.2.0 255.255.255.0 192.10.1.1, what does the address 192.10.1.1 represent?

Select one:

- a. the source host
- b. the outbound interface
- c. the next hop router
- d. the destination network

Question 48

Not yet answered

Marked out of 1.00

Flag question

Edit question

Which of the following subnet masks could be used when subnetting a Class B IP address with no super netting?

Select one or more:

- a. 255.255.252.0
- b. 255.192.255.0
- c. 255.255.0.0
- d. 255.0.0.0

Question 49

Not yet answered

The network 192.1.1.0 has been subnetted for a network design. The 192.1.1.16/28 subnet has been chosen for further subnetting to provide for

-59

Marked out of 1.00

Flag question

Edit question

point-to-point serial link addressing. How many serial link subnets can be created while minimizing the number of wasted addresses?

Select one:

- a. 6
- b. 7
- c. 3
- d. 4
- e. 2

Question 50

Not yet answered

Marked out of 1.00

Flag question

Edit question

Which command is used to copy a backup configuration file from a server to the non-volatile memory of a switch?

Select one:

- a. Switch# copy startup-config tftp
- b. Switch#copy tftp flash
- c. Switch# copy NVRAM tftp
- d. Switch#copy tftp startup-config

Question 51

Not yet answered

Marked out of 1.00

Flag question

Edit question

Using Telnet, a network administrator is unable to log in to a switch located at another office in order to make configuration changes to it. What could be the problem?

Select one:

- a. VLAN 1 on the switch is not configured for TCP/IP network access.
- b. The managmement station does not have access to a full-duplex Fast Ethernet link on the switch.
- c. The switch hostname has not been set.
- d. The switch must be managed from the local LAN.

Question 52

Not yet answered

Marked out of 1.00

Flag question

Describe the switching function that occurs in a router.

Select one:

- a. allows the router to make forwarding decisions based on Layer 2 addressing

Edit question

- b. enables the router to select the most appropriate interface for forwarding a packet
- c. accepts a packet on one interface and forwards it to a second interface
- d. uses network addressing to select the best route and interface to forward data

Next

QUIZ NAVIGATION

1 2 3 4 5 6 7 8 9 10 11 12 13 14 15 16 17 18 19 20 21 22
23 24 25 26 27 28 29 30 31 32 33 34 35 36 37 38 39 40 41 42 43 44
45 46 47 48 49 50 51 52 53 54 55 56 57 58 59 60 61 62 63 64 65 66
67 68 69 70

Finish attempt ...

Start a new preview

NAVIGATION

Home
- My home
  - Site pages
  - My profile
  - Current course
    - Nationals SkillsUSA 2015
      - Participants
      - Badges
      - General
      - Topic 1
      - **SkillsUSA Exam -2015**
      - Topic 2
  - My courses

Admin User

SkillsUSA National Testing Site-2015

Home ► My courses ► Internetworking ► Nationals SkillsUSA 2015 ► Topic 1 ► SkillsUSA Exam -2015 ► Preview

Question 53

Not yet answered

Marked out of 1.00

Flag question

Edit question

Which of the following application layer protocols use UDP segments?

Select one:

- a. TCP/IP
- b. POP/SNMP
- c. HTTP/FTP
- d. DNS/TFTP

Question 54

Not yet answered

Marked out of 1.00

Flag question

Edit question

Which of the following is considered a WAN technology?

Select one:

- a. DSL
- b. Token Ring
- c. Wireless Ethernet
- d. Ethernet

Question 55

Not yet answered

Marked out of 6.00

Flag question

Edit question

Match the definitions or characteristics with the correct protocols.

An address that has all 1s in the host field.	Choose...
Lost or corrupted packets are not resent.	Choose...
Delivers data on a best-effort basis.	Choose...
Sets of rules that tell the services of a network what to do.	Choose...

Packets are numbered and sequenced so that the destination can reorder packets and determine if a packet is missing. Choose...

Question 56

Not yet answered

Marked out of 1.00

Flag question

Edit question

The users in a department are using a variety of host platforms. All of them have been approved with a user ID in a RADIUS server database. Which one of these features should be used to restrict access to the switch ports in the building?

Select one:

- Port-based authentication
- AAA authentication
- Port security
- AAA authorization
- RADIUS+1

Question 57

Not yet answered

Marked out of 5.00

Flag question

Edit question

Matching

Provided when you use a digital signature	Choose...
IKE SAs and IPsec SAs are negotiated	Choose...
Public and private keys create a shared-secret key	Choose...
It is issued by the trusted certificate authority (CA) to the requesting peer for authentication.	Choose...
Type of cipher is DES or 3DES	Choose...
Type of encryption is supported by Encapsulating Security Payload (ESP)	Choose...

Question 58

Not yet answered

Marked out of 1.00

Flag question

Edit question

What subnet mask would be appropriate for a Class C address that is used for 9 LANs, each with 12 hosts?

Select one:

- a. 255.255.255.240

- b. 255.255.255.224
- c. 255.255.255.0
- d. 255.255.255.252

Question 59

Not yet answered

Marked out of 1.00

Flag question

Edit question

Which command must you configure for EIGRP to pass the subnet mask with the route?

Select one:

- a. no summary
- b. ip classless
- c. ip subnet vlsm
- d. no auto-summary

Question 60

Not yet answered

Marked out of 1.00

Flag question

Edit question

Which username must be configured on routers for PPP authentication?

Select one:

- a. One that matches neither hostname.
- b. There is no restriction on username.
- c. One that matches the hostname of the local router.
- d. One that matches the hostname of the remote router.

Question 61

Not yet answered

Marked out of 1.00

Flag question

Edit question

Which statement below is true?

Select one:

- a. TACACS+ offers multiprotocol support
- b. RADIUS supports non IP protocols
- c. TACACS+ does not support AppleTalk
- d. RADIUS offers multiprotocol support

Admin User

SkillsUSA National Testing Site-2015

Home ► My courses ► Internetworking ► Nationals SkillsUSA 2015 ► Topic 1 ► SkillsUSA Exam -2015 ► Preview

Question 62

Not yet answered

Marked out of 1.00

Flag question

Edit question

Which one of the following choices provides IPsec confidentiality?

Select one:

- a. hashing algorithms such as MD5 or SHA-1
- b. encryption algorithms such as 3DES or AES
- c. the exchange of digital certificates
- d. the secrecy of the private key

Question 63

Not yet answered

Marked out of 1.00

Flag question

Edit question

Which of the following choices best provides IPsec authentication?

Select one:

- a. the exchange of digital certificates
- b. encryption algorithms such as 3DES or AES
- c. the secrecy of the private key
- d. hashing algorithms such as MD5 or SHA-1

Question 64

Not yet answered

Marked out of 1.00

Flag question

Edit question

Which statement is true of IPsec transport mode?

Select one:

- a. The entire IP datagram is left intact.
- b. Only the IP payload is encrypted, and the original IP headers are left intact.
- c. The entire original IP datagram is encrypted, and it becomes the payload in a new IP packet.

- d. Only the IP headers are encrypted, and the original IP payload is left intact.

Question 65

Not yet answered

Marked out of 1.00

Flag question

Edit question

In which situation is an administrative distance required?

Select one:

- a. whenever static routes are defined
- b. when the same route is learned via multiple routing sources
- c. when multiple paths are available to the same destination, and they are all learned via the same routing protocol
- d. whenever dynamic routing is enabled

Question 66

Not yet answered

Marked out of 1.00

Flag question

Edit question

How does a distance vector router learn about paths for networks that are not directly connected?

Select one:

- a. from the destination router
- b. from the source router
- c. from neighboring routers
- d. from directly connected networks only

Question 67

Not yet answered

Marked out of 1.00

Flag question

Edit question

What does "split horizon" specify?

Select one:

- a. that information about a route should be sent back in the direction from which the original information came
- b. that information about a route should not be sent back in the direction from which the original information came
- c. that information about a route should not be sent in any direction
- d. that information about a route should be sent back only in the direction from which the original information came

Question 68

Not yet answered

Marked out of 2.00

Flag question

Edit question

If a route for a network is in holddown and an update arrives from a neighboring router with the same metric as was originally recorded for the network, what does the router do?

Select one:

- a. marks the network as "accessible" and removes the hold-down timer
- b. increments the hold-down timer
- c. ignores the update
- d. marks the network as "accessible" but keeps the hold-down timer on

Question 69

Not yet answered

Marked out of 2.00

Flag question

Edit question

Banner _____ command creates a message to be displayed upon router login.

Question 70

Not yet answered

Marked out of 1.00

Flag question

Edit question

Two routers named Atlanta and Brevard are connected by their serial interfaces, but there is no connectivity between them. The Atlanta router is known to have a correct configuration. Given the partial configurations, identify the problem on the Brevard router that is causing the lack of connectivity.

Atlanta uses S0 to connect to Brevard's S1.

```
Atlanta#sh int s0
Serial0 is up, line protocol is up
Hardware is HD64570
Internet address is 192.168.10.1/24
MTU 1500 bytes, BW 1544 Kbit,
 Reliability 255/255
Encapsulation HDLC, loopback not set
Keepalive set (10 sec)

Brevard#sh int s1
Serial1 is up, line protocol is up
Hardware is HD64570
Internet address is 192.168.11.2/24
MTU 1500 bytes, BW 56000 Kbit,
```

Reliability 255/255
Encapsulation HDLC, loopback not set
Keepalive

Select one:

- a. no loopback set
- b. transmission unit size too large
- c. an incorrect subnet mask
- d. an incorrect IP address
- e. incompatible encapsulation at each end
- f. incompatible bandwidth between routers

Next

QUIZ NAVIGATION

1	2	3	4	5	6	7	8	9	10	11	12	13	14	15	16	17	18	19	20	21	22
23	24	25	26	27	28	29	30	31	32	33	34	35	36	37	38	39	40	41	42	43	44
45	46	47	48	49	50	51	52	53	54	55	56	57	58	59	60	61	62	63	64	65	66
67	68	69	70																		

Finish attempt ...

Start a new preview

NAVIGATION

Home
- My home
  - Site pages
  - My profile
  - Current course
    - Nationals SkillsUSA 2015
      - Participants
      - Badges

SkillsUSA
2015 Contest Projects

Major Appliance Technology

Click the “Print this Section” button above to automatically print the specifications for this contest. Make sure your printer is turned on before pressing the button.

Major Appliance Technology

These are all Microsoft Publisher files. You must have that program to view.

Download the Publisher files

SkillsUSA
2015 Contest Projects

Marine Service Technology

Click the “Print this Section” button above to automatically print the specifications for this contest. Make sure your printer is turned on before pressing the button.

PRE DELIVERY INSPECTION STATION

_____

In this station you will perform a Pre delivery inspection on both the boat and trailer. You will fill in all blank spaces on both pages with information about the boat and trailer.

- Put a check mark in the OK box if it has what it is asking for and works properly.
- If the boat or trailer doesn't have the item or component put a check in the N/A box.
- If the item doesn't work put a check mark in the Inoperative box.

On the PDI sheet it asks for the Tech, please put your Id # in that space on both pages.

Tools you will need: torque wrench and socket, battery pack, trailer harness, tire pressure gauge and Safety glasses.

TRACKER BOAT CENTER™

Tech ID number: _____ Rigging / Pre-Delivery Inspection

Station # _____

Boat:

Ok	N/A	Inoperative	
☐	☐	☐	Steering wheel straight with motor
☐	☐	☐	Steering turns motor correct direction
☐	☐	☐	Instruments and gauges correctly installed
☐	☐	☐	Depth finder(s) and transducer(s) secured
☐	☐	☐	Switches function correctly
☐	☐	☐	Running lights present and function correctly
☐	☐	☐	All drain plugs in boat (includes live-well(s))
☐	☐	☐	Drains in compartments clear of debris
☐	☐	☐	Table and legs in boat
☐	☐	☐	Fire extinguisher(s) present and fully charged
☐	☐	☐	All seats and pedestals in boat
☐	☐	☐	Fuel tank(s) and hose in boat
☐	☐	☐	Primer bulb oriented correctly
☐	☐	☐	Canopy/canvass fits properly
☐	☐	☐	Compartment latches work properly
☐	☐	☐	Carpet stain free and glued properly
☐	☐	☐	Decals free of defects

Boat manufacturer: _____

Boat model: _____

Boat serial (HIN): _____

Engine manufacturer: _____

Engine model: _____

Engine serial: _____

Trailer:

☐	☐	☐	Boat fits properly on trailer
☐	☐	☐	Bow stop adjusted and secured
☐	☐	☐	Winch strap secured and operates correctly
☐	☐	☐	Safety cable installed and secured
☐	☐	☐	Tie downs installed and secured
☐	☐	☐	Transom saver correct type and length

Trailer manufacture: _____

Trailer model: _____

Trailer serial: _____

☐	☐	☐	Dolly jack functions properly

Trailer continued:

Ok	N/A	Inoperative	
☐	☐	☐	Safety chains installed and operate freely
☐	☐	☐	Trailer lights tested
☐	☐	☐	Lug nuts torqued to specification (90 foot pounds) present torque wrench to judge for inspection
☐	☐	☐	Tire pressure correct on all tires Record tire pressure: R:_____ L:_____
☐	☐	☐	Spare mounted and secured
☐	☐	☐	Wheel grease caps installed
☐	☐	☐	Brake fluid full

Processing Questions:

What items should be checked before starting the engine?

☐ Lower unit gearcase oil level

☐ Idle speed

☐ Engine oil level

☐ Gear shift operation and acceleration from idle

☐ Propeller nut torque

What items should be checked while the engine is running?

☐ Lower unit gearcase oil level

☐ Idle speed

☐ Engine oil level

☐ Gear shift operation and acceleration from idle

☐ Propeller nut torque

Wipe down boat with rag and cleaner when done. SCORE_____Each item worth 2 points

CDM TEST

COVER SHEET

MMI

MARINE MECHANICS INSTITUTE

ID #_____ STATION #_____

Student ID._____ Station #_____

Test each of the CDMs provided and record your findings in the boxes below.

Resources: Meter, Harness and the **Capacitor Discharge Module Resistance Test**, **Ditigal Meter** page for specifications

CDM Coil Test	A	B	C	D
Stop diode FB				
Stop diode RB				
Return ground path diode RB				
Return ground path diode FB				
CDM trigger input resistance				
Coil secondary impendence				

Which CDM or CDMs were within Specifaction?_____

RB stands for Reverse Bias

FB stands for Forward Bias

Points available 200

Points awarded_____

2015 Marine Service Technology
SkillsUSA Final Exam

PLEASE do not write on this test.
Please use the provided **ANSWER SHEET.**

1. Diesel fuel has a greater susceptibility than gasoline fuel to:
   a. microbial growth.
   b. volatility reduction.
   c. phase separation.
   d. evaporation.

2. If the engine operating temperature increases dramatically, the MOST PROBABLE cause is:
   a. old or clogged exhaust risers.
   b. incorrect fuel/air mixture.
   c. spark plugs of the incorrect heat range
   d. restricted air inlet.

3. Which of the following colors are appropriate for use as a DC negative conductor?
   a. Yellow and black
   b. Green and orange
   c. White and blue
   d. Red and orange

4. According to ABYC standards, boats with sleeping births shall not have ventilation openings on aft-facing surfaces. The reason is:
   a. risk of water migration into the boat.
   b. lack of air in accommodations spaces.
   c. excessive air circulation.
   d. risk of exhaust gases entering accommodations spaces.

5. According to AWG cable sizing, as the gauge number increases, the cable diameter:
   a. does not change.
   b. decreases.
   c. increases.
   d. has a higher thermal rating.

6. On 4-stroke outboard engines, valve tappet clearance is checked:
   a. according to ABYC standards.
   b. on a cold engine.
   c. based on manufacturer's specifications.
   d. on either a warm or a cold engine.

7. The PRIMARY function of hydraulic fluid in a typical steering or tilt/trim system is to:
   a. transmit power.
   b. lubricate moving parts.
   c. dissipate heat.
   d. prevent freezing.

8. Which of the following components does NOT require overcurrent protection?
   a. Bow thruster
   b. Starter motor
   c. DC panel board
   d. Bilge blower

9. On an inboard powered boat with a 2:1 gear ratio in the transmission, the propeller will turn at:
   a. 1/4 times engine RPM.
   b. 2 times engine RPM.
   c. engine RPM.
   d. 1/2 times engine RPM.
10. The minimum bend radius of a control cable is based on:
   a. 300 CFM.
   b. sheathing material.
   c. cable strand count.
   d. manufacturer's recommendations.

11. A technician is winterizing a potable water system. Which type of antifreeze should s/he use?
   a. Methyl ethyl ketone
   b. Ethylene glycol.
   c. Propylene glycol
   d. Chlorine bleach and water

12. The technician should reference specifications for electrically operated fuel pumps and ensure that the pump's pressure ratings do not exceed the specifications provided by the:
   a. pump manufacturer.
   b. engine manufacturer.
   c. ABYC.
   d. USCG.

13. Identify the insulation that should be applied to an oil pressure sending wire, according to ABYC standards.
   a. Tan
   b. Light blue
   c. Pink
   d. Dark gray

14. Lower unit seals serve two primary functions. They are:
   a. position the propeller shaft and seal oil into gear case.
   b. seal lubricant into the gear case and seal water out of the gear case.
   c. control prop shaft radial runout and seal water out of the gear case.
   d. control prop shaft centrifugal force and drive unit torque.

15. Which of the following portrays the MOST APPROPRIATE customer service skills by a marine service technician?
   a. A marine service technician speaking to a customer calmly and making eye contact
   b. A marine service technician blaming a customer.
   c. A marine service technician speaking to customer calmly while looking around the room
   d. A marine service technician speaking to customer, rolling his eyes and waving his arms

16. With a switch in the closed position, the technician reads 6.8 volts on the meter. The diagnosis is:
   a. the circuit has faulty wiring.
   b. the battery has insufficient capacity.
   c. the switch is bad.
   d. the battery needs recharging.

17. Modern batteries dictate that battery conductance testing be used to determine the condition of the battery. To conduct the conductance test, the technician must first typically input the battery's:
    a. voltage.
    b. impedance.
    c. reserve capacity
    d. CCA or MCA rating.

18. What test is performed with an ohm meter?
    a. Voltage drop test
    b. Wattage draw test
    c. Continuity test
    d. Amperage draw test

19. Helicoils are often used to:
    a. replace stripped threads.
    b. increase torque tension.
    c. repair cracked engine blocks.
    d. repair cracked cylinder heads.

20. Upon removal of a fuel pump cover, the technician finds a jelly-like substance. The likely cause is:
    a. inadequate ethanol mixture.
    b. improper use of fuel stabilizers.
    c. old, water-contaminated fuel.
    d. fiberglass fuel tank deterioration.

21. A customer complains that his/her DC cabin lights seem to be failing prematurely. The most likely cause for this could be:
    a. loose connection.
    b. over voltage to the bulbs.
    c. poor ground.
    d. improper wire gauge.

22. When talking to a customer, marine service technicians should be:
    a. forceful.
    b. polite.
    c. reserved.
    d. stern.

23. Pipe schedule refers to:
    a. material properties.
    b. life expectancy in years.
    c. wall thickness.
    d. suitability for underground use.

24. What is the FIRST thing to check for when a diesel boat has low power and emits no smoke?
    a. Incorrect fuel pump timing
    b. High injector pop pressure
    c. Blocked or contaminated fuel filter
    d. Restricted air filter

25. Historically, woods commonly used in marine construction are mahogany and teak. The primary reason for their use was that they:
    a. are naturally oilier than other woods.
    b. are more fire retardant than other woods.
    c. bend more easily than other woods.
    d. are lighter than other woods.

26. Proper procedures for bleeding a hydraulic steering system dictate that the technician consult:
   a. Cartwright's Manual of Marine Repair.
   b. manufacturer's instructions.
   c. ABYC standards.
   d. USCG.

27. Removing dirt particles from engine intake air prevents:
   a. contamination of the turbo-charger.
   b. premature cylinder wear.
   c. engine running too hot.
   d. excessive valve guide wear.

28. Connecting batteries in parallel is often done to increase battery:
   a. capacity.
   b. inductance.
   c. resistance.
   d. voltage.

29. There are two popular EFI systems used on 4-cycle marine engines, multi-port and throttle body. The essential difference between the two is:
   a. throttle body provides an injector for each cylinder.
   b. multi-port provides an injector for each cylinder.
   c. throttle body is insensitive to manifold pressure.
   d. multi-port is insensitive to manifold pressure.

30. When sizing a fuse for a bilge blower motor, it is important to:
   a. exceed motor current draw rating by 25%.
   b. rate the fuse based on motor inrush current.
   c. rate the fuse based on supply cable gauge.
   d. comply with manufacturer's recommendations.

31. Which of the following must be considered when installing an electric bilge pump?
   a. Pump discharge flow rate monitor
   b. Overcurrent protection
   c. Adherence to minimum 1.5 quart; discharge hose requirement
   d. Audible indicator of pump operation

32. A technician is winterizing a sanitation system. Which type of antifreeze should s/he use?
   a. Propylene glycol
   b. Ethylene glycol
   c. Methyl benzolate
   d. Hydroxyl peroxide

33. Regardless of the battery technology used, a battery that is being overcharged may emit:
   a. sulfur dioxide gas.
   b. ammonium chloride gas.
   c. nitrogen gas.
   d. hydrogen gas.

34. What is the best tool to use when removing a fly wheel from an outboard motor?
    a. Hammer and punch
    b. Pry bar
    c. Hammer and impact driver
    d. Puller set

35. The relative position of the drive in relation to the boat transom is called:
    a. angle of attack.
    b. trim angle.
    c. caviation point.
    d. ventilation point.

36. Which of the following are considered to be normal seawater pump replacement parts?
    a. Impeller shaft, bearing snap-ring and cover
    b. Impeller, gasket and water/oil seals
    c. Can plate, impeller and gasket
    d. Bearing snap-ring, gasket and water/oil seals

37. The technician observes an oil slick at the exhaust outlet when the boat is being operated. The MOST PROBABLE cause is:
    a. raw water pump failure.
    b. faulty thermostat.
    c. a leak in the oil cooler.
    d. incorrect air/fuel mixture.

38. The technician is setting up a trailer to achieve a tongue weight of 80 pounds. Using a spring scale, s/he finds the actual tongue weight to be 200 lbs. To adjust this, the technician needs to:
    a. move the trailer axle forward or shift the boat rearward on the trailer.
    b. move the trailer axle rearward or shift the boat rearward on the trailer.
    c. move the trailer axle forward or shift the boat forward on the trailer.
    d. move the trailer axle rearward or shift the boat forward on the trailer.

39. Based on Ohm's Law, if voltage remains constant and resistance increases, amperage must:
    a. decrease.
    b. increase.
    c. stay the same.
    d. depend on ambient temperature.

40. During an engine's compression stroke, the piston(s) move(s) from:
    a. TDC to BDC.
    b. ATDC to BDC.
    c. BDC to TDC.
    d. BTDC to BDC.

41. The voltmeter reading when the technician checks a 12-volt starter system with the engine cranking should be:
    a. 6 volts.
    b. 8 volts.
    c. 10 volts
    d. 12 volts.

42. A frequent barrier to reaching an accurate diagnosis of a customer concern is:
   a. that the time allocated for repair is too short.
   b. that the problem is not accurately documented on the repair order.
   c. that the cost of repair parts is too high.
   d. that replacement parts are no longer available.

43. Spilled battery electrolyte is BEST neutralized using:
   a. fresh water.
   b. fresh water and baking soda.
   c. baking powder and water solution.
   d. salt water and baking soda mixture.

44. A sticking anti-siphon valve may cause:
   a. fuel pump failure.
   b. excessively lean fuel mixture.
   c. carburetor overheating.
   d. excessive fuel system pressure.

45. The MOST likely symptom of insufficient spark advance is:
   a. post ignition.
   b. engine skipping.
   c. difficulty starting engine.
   d. lack of power.

46. In a heat exchanger, coolant and water, or oil, may flow in opposite directions. Why might this be necessary?
   a. To enhance heat transfer from one fluid to another
   b. To maintain system pressure
   c. To minimize the risk of silicate dropout
   d. To promote antifreeze and water mixing

47. Which of the following metals is the MOST susceptible to a common corrosion type known as poultice corrosion?
   a. Miled steel
   b. Bronze
   c. Copper
   d. Aluminum

48. A technician is performing a voltage drop test to an outboard engine electric starter circuit. The tool of choice would be:
   a. amp meter.
   b. ohmmeter.
   c. voltmeter.
   d. capacitance tester.

49. On 4-stroke engines, intake and exhaust valves typically:
   a. are interchangeable.
   b. have different size heads; the exhaust valve is usually larger.
   c. have different size heads; the intake valve is usually larger.
   d. are color coded.

50. A technician completes a compression test on a 6-cylinder engine and finds two cylinders with lower than acceptable compression. The next action the technician should take is to:
   a. tune the engine.
   b. overhaul the engine.
   c. recondition the valves.
   d. consult with the customer.

51. An anchor windlass manufacturer specifies a 1¼ inch backing plate under the thru-deck mounting hardware. The installer could achieve this thickness by using two backing plates stacked. To achieve the desired thickness, these plates should be:
   a. 3/4 inch and 1/2 inch material.
   b. 3/4 inch and 3/4 inch material.
   c. 1/4 inch and 5/16 inch material.
   d. 7/8 inch and 3/32 inch material.

52. Determine the correct steering cable length on a boat where the helm is 26 inches from the side of the boat, the engine is centered on an 86-inch wide hull and the helm is 10 feet from the transom.
   a. 200 inches
   b. 230 inches
   c. 290 inches
   d. 330 inches

53. The maximum number of wire/cable terminations that are allowed to be connected to one terminal stud is:
   a. 2
   b. 3
   c. 4
   d. 5

54. MSDS means:
   a. Material Suppression Diagramming Sequence.
   b. Material Safety Data Sheets.
   c. Machine Safety Data Sheets.
   d. Machine Service Data Standards.

55. Which of the following materials is used for cleaning engine parts?
   a. Mineral spirits
   b. Denatured alcohol
   c. Kerosene
   d. High flash-point solvent

56. Typical multi-port injection system control modules operate at:
   a. 5 volts.
   b. 12 volts.
   c. 24 volts.
   d. 36 volts.

57. Which of the following pipe schedules has the thinnest wall?
   a. 20
   b. 30
   c. 35
   d. 40

58. Whenever a customer complaint is related to low voltage, the first thing the technician should check is the:
   a. AWG size.
   b. power source.
   c. terminal connections.
   d. wire insulation thermal rating.

59. To ensure sufficient cathotic protection levels when servicing the lower unit before winter storage, the technician should:
   a. coat existing anodes with clear antifouling paint.
   b. remove the propeller and lubricate the propshaft.
   c. clean, prime and repaint areas where paint has scraped off.
   d. drain and refill the gear case.

60. The technician may perform a wet compression test to determine the condition of:
   a. reed valves.
   b. rocker arms.
   c. cylinder head.
   d. piston rings and valves.

61. The tachometer on a stemdrive boat is registering twice the RPMs that the technician's shop tach shows. The problem may be:.
   a. faulty ECU output.
   b. pulse calibration switch on installed tachometer is not set correctly.
   c. tachometer gauge case ground has excessive resistance.
   d. ignition coil ballast resistor measures excessive resistance.

62. It is best to change the oil in a 4-stroke cycle engine when it is:
   a. cold.
   b. warm.
   c. thoroughly heated.
   d. slightly cooled.

63. Upon inspecting lower unit bearings, the technician finds rust on the bearing surfaces. The probable cause would be:
   a. a leaking water pump.
   b. damage to the cylinder head gasket.
   c. water intrusion into the gear case.
   d. a missing seal on the engine drive shaft.

64. When you are sick and unable to work:
   a. notify your employer at some point during the work day.
   b. notify your employer as soon as possible and before your scheduled start time.
   c. tell your employer to dock you a sick day when you turn in your time card at the end of the week.
   d. it is not required to notify your employer so long as you still have sick leave available.

65. Symptoms caused by a kink in a fuel tank vent hose will MOST likely become apparent during:
   a. fueling.
   b. high-speed operation.
   c. engine idle.
   d. cold weather operation.

66. By design, deep cycle batteries are intended for service that:
   a. draws relatively low amperage over a long period of time.
   b. draws relatively high amperage over a long period of time.
   c. draws relatively low amperage over a short period of time.
   d. draws relatively high amperage over a short period of time.

67. As part of a new trailer's pre-delivery inspection, it is important to insure that:
   a. the wheels are matched in size to the tow vehicle.
   b. the trailer galvanization meets MIL-spec.
   c. the trailer tongue weight exceeds tow vehicle specifications.
   d. the wheels are torqued to specifications.

68. A battery system has evidence of an overcharged condition as shown by an accumulation of electrolyte film on the battery's top surfaces. The fault is most likely due to:
   a. the battery itself.
   b. faulty battery isolator.
   c. the alternator regulator.
   d. faulty starter motor solenoid.

69. One of the two primary functions of a fuel injector is to:
   a. provide back pressure for the fuel injection pump.
   b. control combustion temperature.
   c. control fuel temperature.
   d. deliver the fuel to the combustion chamber.

70. Micron rating, as it applies to fuel filters, is important because:
   a. micron size affects fuel flow.
   b. micron rating too large will restrict fuel flow.
   c. micron rating too small will cause a rich mixture.
   d. micron rating too small may affect engine oil pressure.

71. Incorrect sequencing when torquing engine cylinder head bolts may:
   a. alter piston clearance.
   b. warp the cylinder head.
   c. alter the engine's compression ratio.
   d. have no effect on the engine.

72. Potable water tank vent systems must be designed to insure adequate air intake but minimize the risk of ingress of:
   a. sea water and rain water.
   b. bilge water and sea water.
   c. sea water, bilge water and insects.
   d. insects and bilge water.

73. A component made of a material that is very electrochemically active could be:
   a. an insulator.
   b. a sacrificial anode.
   c. an ionic mass.
   d. very noble.

74. Most outboard engines achieve gear reduction in the:
   a. powerhead.
   b. driveshaft housing.
   c. engine midsection.
   d. lower unit.

75. When measuring amperage on modern electrical equipment, the safest instrument to use is a:
   a. multi-meter connected in parallel with the circuit.
   b. multi-meter connected in series in the circuit.
   c. a clamp-type ammeter.
   d. a gauss meter.

76. One ampere of electrical current equals:
   a. .001 mA.
   b. 10 mA.
   c. 100 mA.
   d. 1000 mA.

77. When conducting an ohms resistance test, the technician should insure that:
   a. the meter's peak reading function is activated.
   b. the meter is set on the diode test scale.
   c. the circuit is de-energized
   d. the meter has the correct polarity.

78. In preparation for a sea trial, the technician is required to:
   a. activate EPIRB to insure its functionality.
   b. verify sufficient fuel and appropriate USCG safety equipment on board.
   c. register a float plan with USCG.
   d. register a float plan with USCG and verify appropriate USCG safety equipment is on board.

79. Trimming either an outboard engine or I/O drive out:
   a. lifts the bow of the boat.
   b. lowers the bow of the boat.
   c. tilts the boat right or left.
   d. increases propeller load.

80. When comparing equal lengths of 12AWG and 6AWG copper wire, the 6AWG copper wire can carry higher:
   a. amperage.
   b. inductance.
   c. resistance.
   d. temperature.

81. Vernier calipers can effectively measure:
    a. shaft diameter.
    b. radial runout.
    c. shaft distortion.
    d. fastener shear strength.

82. Specifications call for an alignment tolerance of five thousandths of one inch, indicated numerically by:
    a. 0.0005
    b. 0.005.
    c. 0.05.
    d. 0.5.

83. An engine is designed to operate at 4,200 RPM's but, on sea trial, the maximum engine RPM achieved is 3,800. To achieve 4,200 RPM, you must replace the propeller with one that has:
    a. more blade rake.
    b. more pitch.
    c. less pitch.
    d. more blade cup.

84. Which of the following gasket materials are appropriate for sealing fuel tank sending units?
    a. Neoprene
    b. Cork
    c. Natural rubber
    d. Waxed paper

85. If installed in an alternator circuit with a maximum charge rating of 100 amperes, the battery isolator in the image shown must have a minimum amperage rating of:
    a. 50 amps.
    b. 100 amps.
    c. 125 amps.
    d. 150 amps.

86. When using an infrared heat gun, a technician finds that the temperature of a starter motor cable rises 75°F when the circuit is activated. A probable cause for this condition is:
    a. the conductor is too large for the circuit.
    b. the cable insulation is not appropriate for the circuit.
    c. the AWG of the conductor is too small.
    d. the AWG of the conductor is too large.

87. Which of the following components does NOT require ignition protection?
    a. Spark plugs
    b. Starter motor
    c. Distributor caps
    d. Alternators

88. An ohm is a measurement of:
   a. current.
   b. power.
   c. resistance.
   d. voltage.

89. Oil used in the crankcase of a 4-stroke outboard engine should be:
   a. an API CD-rated oil.
   b. minimally an API SA-rated oil.
   c. as specified by the manufacturer.
   d. either a detergent or a non-detergent oil.

90. In a water-cooled outboard engine, the water pump impeller is generally located in the:
   a. cylinder head.
   b. cowl assembly.
   c. powerhead.
   d. lower unit.

91. Which of the following resumes is MOST appropriate for a person who is applying for an entry-level position?
   a. Multiple page resume
   b. Single paragraph resume
   c. Single page resume
   d. Blank resume

92. Classic contributors to excessive voltage drop are:
   a. undersized cabeling and loose connection(s).
   b. undersized cabeling and discharged batteries.
   c. underrated fuse and loose connection(s).
   d. undersized overcurrent protection device and loose connection(s)..

93. On the purchase of a carburetor overhaul kit for $28.95, where the tax rate is 7.5 %, the tax on the purchase would be:
   a. $2.14.
   b. $2.17.
   c. $31.09.
   d. $31.12.

94. Customer service is BEST defined as the ability to:
   a. create quality products that do not require a lot of support.
   b. understand and effectively respond to the customer.
   c. make promises to a customer to keep him or her happy.
   d. convince the customer that s/he needs the product.

95. Battery switches have several important installation criteria. They include:
   a. mounting on a bulkhead and readily accessible.
   b. mounting in a water-tight location and readily accessible.
   c. mounting in the cockpit as close as practicable to the battery.
   d. mounting as close as practicable to the battery and readily accessible.

96. The most useful tool for diagnosing running condition problems on an electronically fuel injected marine engine is:
   a. a proprietary tester/scan tool laptop computer.
   b. a multimeter/amp clamp.
   c. an infrared sensor.
   d. a conductance tester.

97. A customer's hairdryer rated at 1,500 watt, 120VAC will require a minimum overcurrent protection rating of:
   a. 5 amps.
   b. 15 amps.
   c. 20 amps.
   d. 10 amps.

98. Black, sooty spark plug electrodes may be an indication of:
   a. a leaking exhaust manifold.
   b. excessive air intake temperature.
   c. a rich fuel mixture.
   d. faulty piston rings.

99. Which of the following mathematically describes the relationship of voltage, current and resistance.
   a. Faraday's law
   b. Ohm's law
   c. Watt's law
   d. Bernoulli's principle

100. Resistance is measured in
   a. Amps
   b. Watts
   c. Volts
   d. Ohms

SkillsUSA

Marine Service Techology

Contestant # _____ **Date** _____ **Score** _____

Please fill the correct answer oval completely (A) ● (C) (D)

1. (A) (B) (C) (D)
2. (A) (B) (C) (D)
3. (A) (B) (C) (D)
4. (A) (B) (C) (D)
5. (A) (B) (C) (D)
6. (A) (B) (C) (D)
7. (A) (B) (C) (D)
8. (A) (B) (C) (D)
9. (A) (B) (C) (D)
10. (A) (B) (C) (D)
11. (A) (B) (C) (D)
12. (A) (B) (C) (D)
13. (A) (B) (C) (D)
14. (A) (B) (C) (D)
15. (A) (B) (C) (D)
16. (A) (B) (C) (D)
17. (A) (B) (C) (D)
18. (A) (B) (C) (D)
19. (A) (B) (C) (D)
20. (A) (B) (C) (D)
21. (A) (B) (C) (D)
22. (A) (B) (C) (D)
23. (A) (B) (C) (D)
24. (A) (B) (C) (D)
25. (A) (B) (C) (D)
26. (A) (B) (C) (D)
27. (A) (B) (C) (D)
28. (A) (B) (C) (D)
29. (A) (B) (C) (D)
30. (A) (B) (C) (D)
31. (A) (B) (C) (D)
32. (A) (B) (C) (D)
33. (A) (B) (C) (D)
34. (A) (B) (C) (D)
35. (A) (B) (C) (D)
36. (A) (B) (C) (D)
37. (A) (B) (C) (D)
38. (A) (B) (C) (D)
39. (A) (B) (C) (D)
40. (A) (B) (C) (D)
41. (A) (B) (C) (D)
42. (A) (B) (C) (D)

Turn over for remaining answers

43. A B C D
44. A B C D
45. A B C D
46. A B C D
47. A B C D
48. A B C D
49. A B C D
50. A B C D
51. A B C D
52. A B C D
53. A B C D
54. A B C D
55. A B C D
56. A B C D
57. A B C D
58. A B C D
59. A B C D
60. A B C D
61. A B C D
62. A B C D
63. A B C D
64. A B C D
65. A B C D
66. A B C D
67. A B C D
68. A B C D
69. A B C D
70. A B C D
71. A B C D
72. A B C D
73. A B C D
74. A B C D
75. A B C D
76. A B C D
77. A B C D
78. A B C D
79. A B C D
80. A B C D
81. A B C D
82. A B C D
83. A B C D
84. A B C D
85. A B C D
86. A B C D
87. A B C D
88. A B C D
89. A B C D
90. A B C D
91. A B C D
92. A B C D
93. A B C D
94. A B C D
95. A B C D
96. A B C D
97. A B C D
98. A B C D
99. A B C D
100. A B C D

Workstation # _____ Contestant # _____

Gear Shimming Station		
	Possible Score	Actual Score
Upper Drive Gear Calculation	50	
Lower Drive Gear Calculation	50	
Input / Pinion Gear Calc.	50	
Proper Use of Precision Instruments	10	
Proper Use of Special Tools	10	
Following Procedures	10	
Organization	10	
General Attitude	10	

Workstation # _____ Contestant # _____

Shimming Worksheet

Lower Gear Shimming Procedure		**Upper Gear** Shimming Procedure		**Pinion Gear** Shimming Procedure	
Feeler Gauge Measurement (A)		Feeler Gauge Measurement (A)		Average of Measurements (A)	
+/- Gear Etching (S) ***Note**: Reverse sign due to shim location*		+/- Gear Etching (S)		– Tool Thickness (0.500")	
= Lower Gear required **Shims**		= Upper Gear required **Shims**		= Actual Dimension (D)	
					↓
				Actual Dimension (D)	
				+/- Gear Etching (S)	
				= Total Gear Dimension (T)	
					↓
				Total Gear Dimension (T)	
				– Nominal Figure (2.171 or 2.244)	
				= Pinion Gear required **Shims**	

Lower Output Gear Shimming

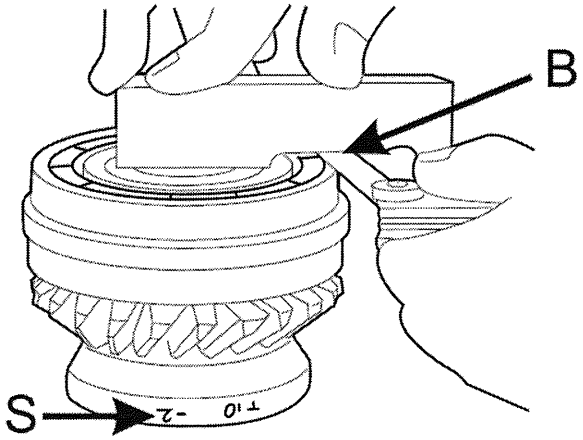

P0009383

1. Place gear/bearing assembly with gear down, on flat surface.
   Protect gear cup surface.
   Place shim tool **3849650**, on assembly as shown.
   Apply light pressure to hold shim fixture properly on gear. Fixture should be level across top of gear shaft.

2. Take feeler gauge measurement (B) at outer edge of bearing.
   Record this measurement, in inches.

3. Find etching on gear, +/- number is shimming allowance **(S)**.
   Number represents thousandths of an inch (0.00X").
   2 in picture = 0.002"
   Add or subtract **(S)** from measurement **(B).**
   This is shim thickness required to properly position lower output gear in upper gear housing.

NOTICE! For Lower gear, use the following information when adding or subtracting etching **(S)** from measurement **(M)**.

EXAMPLE;

- If etched number is +2, **SUBTRACT** 0.002 in. from the feeler gauge measurement **(B)**.
- If etched number is -2, **ADD** 0.002 in. to the feeler gauge measurement.
- If etched number is zero (0), use feeler gauge measurement **(B)** to determine shims.

SkillsUSA
2015 Contest Projects

Masonry

Click the “Print this Section” button above to automatically print the specifications for this contest. Make sure your printer is turned on before pressing the button.

51st Annual

SKILLS usa
MASONRY
CHAMPIONSHIPS

Kentucky Exposition Center

Louisville, Kentucky
JUNE 25, 2015

JUDGING CRITERIA

JUDGING CRITERIA
JUNE 25, 2015

ITEM 1 - PLUMB
MAXIMUM POINTS = 125

Procedure

Refer to drawing below for the locations to check plumb. There are six locations total.

A. Use a 4 foot level to find exact plumb at each location. Insert step gauge at the largest gap and deduct five points for each notch the gauge is inserted.

B. Add notches for all locations and deduct from 125 to obtain score. If total is a negative amount, record zero. Record the score under the proper contestant number on score sheet.

Front View

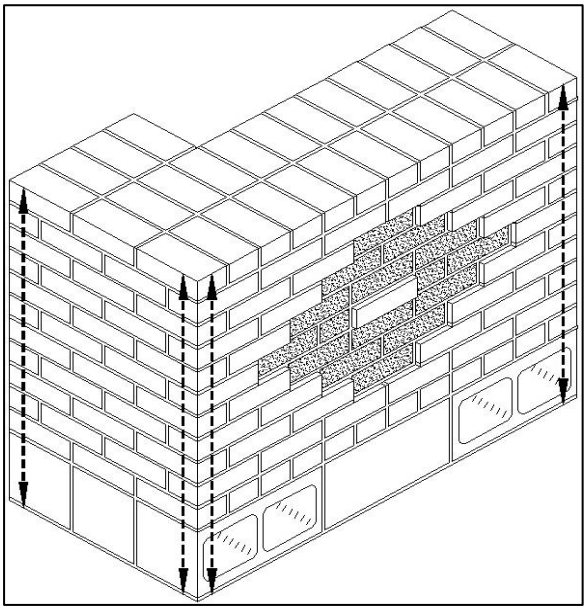

Rear View

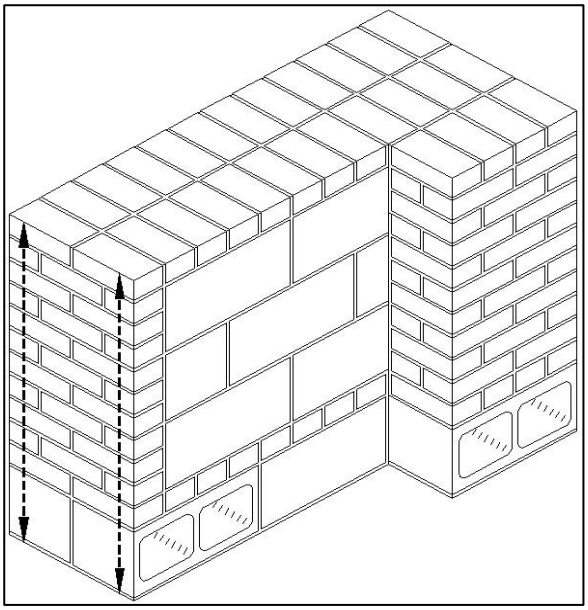

JUDGING CRITERIA
JUNE 25, 2015

ITEM 2 - LEVEL
MAXIMUM POINTS = 125

Procedure

Refer to drawing below for the locations to check level. There are 4 locations total.

A. Use a 4 foot level to find exact level at each location. Insert step gauge at the largest gap and deduct five points for each notch the gauge is inserted.

B. Add notches for all locations and deduct from 125 to obtain score. If total is a negative amount, record zero. Record the score under the proper contestant number on score sheet.

Note: If the project is not complete, the level points indicated for judging are not available. Therefore, this item cannot be judged and a score of zero is entered.

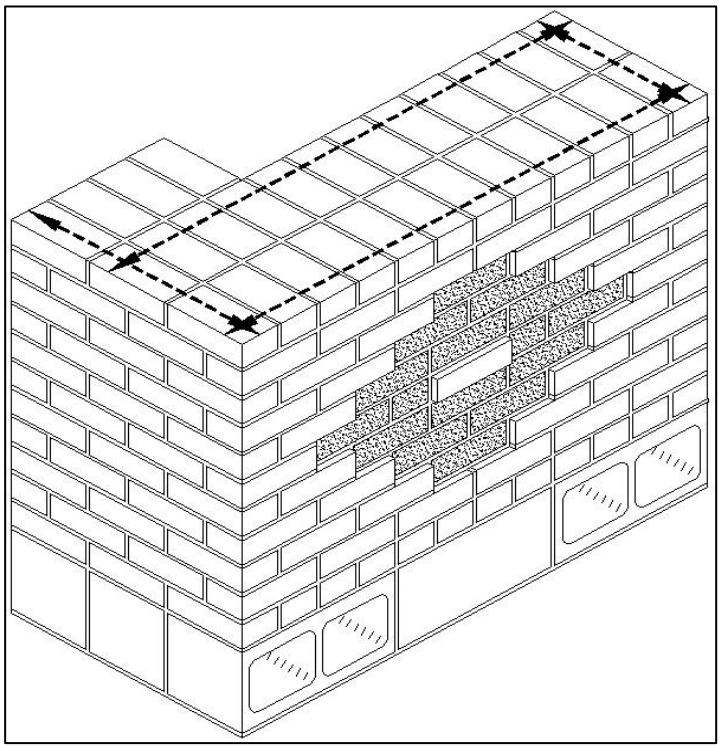

JUDGING CRITERIA
JUNE 25, 2015

ITEM 3 - SQUARE AND RANGE
MAXIMUM POINTS = 125

Procedure

Refer to drawing below for the locations to check square and range.

A. Square:

1. Measure outside dimensions on the diagonal as indicated. Square will be measured on the top of the project only.

2. Deduct five points for each 1/16" of difference in these measurements.

B. Range:

1. Use straightedge to check range (alignment) on the front of the project. Range will also be checked on the left side of the project as indicated below.

2. Insert step gauge at the largest gap on each side, add up the total out of range number, and deduct five points for each notch the gauge is inserted.

C. Add the number of points from square and range and deduct from 125. Record the score under proper contestant number on rating sheet. If total is a negative record zero.

Square

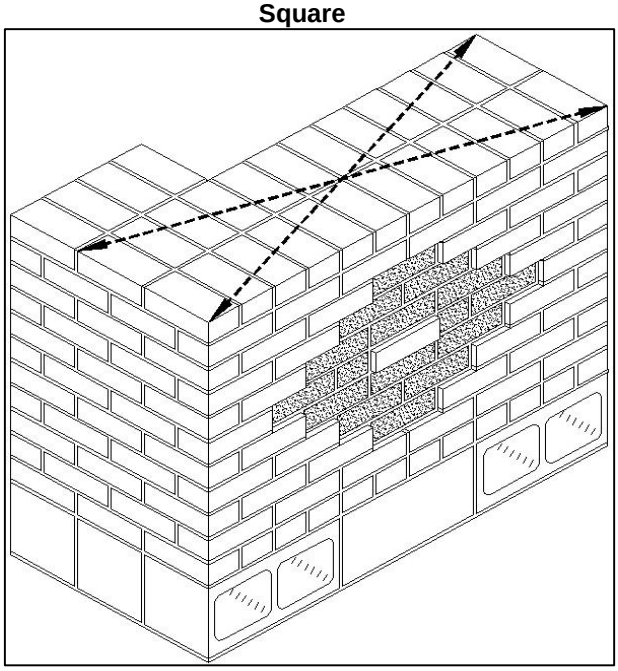

Range

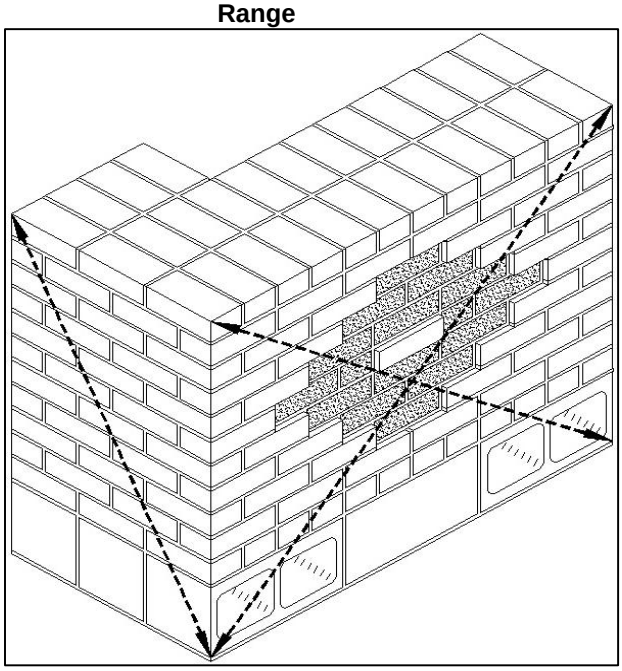

JUDGING CRITERIA
JUNE 25, 2015

ITEM 4 - MEASUREMENTS
MAXIMUM POINTS = 125

Procedure

Refer to the drawing below for the correct measurements.

A. Horizontal measurements should be made on the face of the second course. Deduct five points for every 1/16" difference in horizontal measurement shown on drawing.

B. Vertical measurement should be made from the floor at the point shown on the drawing below to the top of the finished wall. If the project is incomplete, deduct 50 points. If complete, deduct five points for every 1/16" difference in height measurement shown on the drawing.

C. Add all deductions and subtract from 125 to obtain score. Record the score under the proper contestant number on the score sheet. If total is a regative record zero.

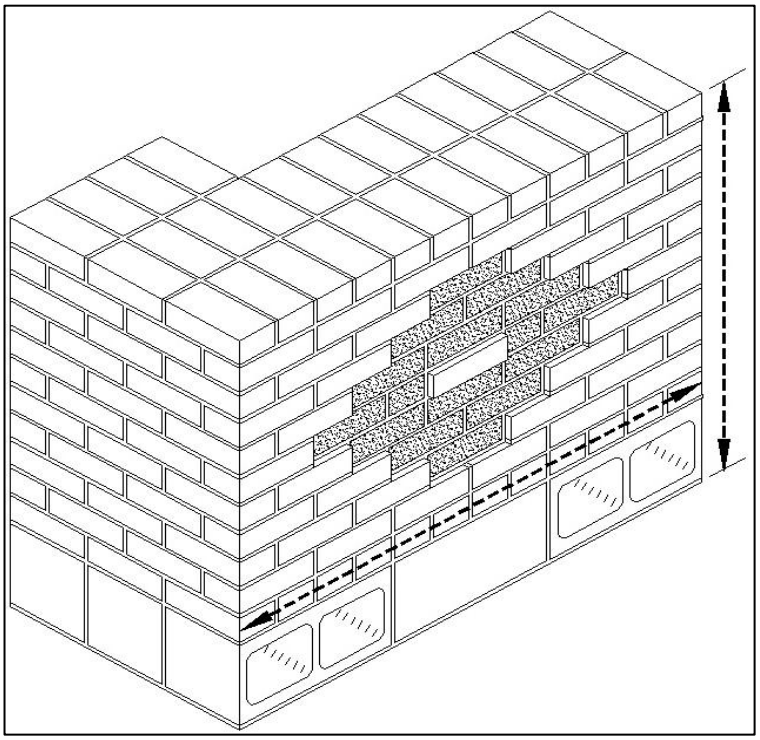

SKILLS usa MASONRY CHAMPIONSHIPS

JUDGING CRITERIA
JUNE 25, 2015

ITEM 5 - CORRECT DESIGN
MAXIMUM POINTS = 125

Procedure

Observe each project after contest is completed and compare with the working drawings on the last page of this criteria for conformity. The project must match the drawing exactly.

A. Check first course all the way around the project to see if the layout is correct. Substract 25 points if incorrect.

B. Check the remainder of the project and determine if the drawings and specifications have been followed. Substract 10 points for every deviation above the first course of masonry.

C. Add items A and B to determine score. Record the score under the proper contestant number on the score sheet. If the total is a negative record zero.

SkillsUSA MASONRY CHAMPIONSHIPS

JUDGING CRITERIA
JUNE 25, 2015

ITEM 6 - TOOLING & NEATNESS
MAXIMUM POINTS = 100

Procedure

All joints are to be struck and brushed as finished masonry. No oil or other additive may be rubbed on the face of the masonry to enhance its appearance nor may anything other than a brush (i.e. carpet, sponge) be used. All tooling and brushing must be completed before the contestant leaves the area.

Neatness will be judged during and after the construction. Safe disposal of unusable units, mortar use and waste, and finished appearance of the work will be judged.

Note: This is subjective judging. You may choose a particular contestant and the control or standard of excellence in the field of contestants and judge down from there. In addition, there should be a minimum of three judges for tooling and neatness, all providing independent scores. These scores will then be averaged by the head judge to determine the final score. Keep in mind, several contestants may have the same score.

SKILLS USA MASONRY CHAMPIONSHIPS

JUDGING CRITERIA
JUNE 25, 2015

ITEM 7 - FULL JOINTS
MAXIMUM POINTS = 100

Procedure

This item to be judged while contestants are working.

A. Observe and rate the following:

1. The extent to which head and bed joints are filled.

2. The uniformity of head and bed joints.

B. Award 0-100 points to determine score. Record the score under the proper contestant number on the score sheet.

Judges' Tip: Workmanship standards generally consider a head joint on brickwork to be full when it is at least 85% full and the void is in that half of the joint away from weather. A head joint on CMUs is considered full when it is at least 90% full and the void is in that half of the joint away from weather. All bed joints are considered full when at least 90% full and the void is in that half of the joint away from the weather.

JUDGING CRITERIA
JUNE 25, 2015

ITEM 8 - PRODUCTION
MAXIMUM POINTS = 100

Procedure

A. A contestant will receive 100 points for a finished project. Record 100 under the appropriate contestant number on the score sheet.

B. For all unfinished projects, do the following:

1. Count the number of brick laid and divide that number in half. Half brick count the same as whole brick, giving a possible total of 170 for a complete project. For example, if there are 10 of the 11 courses completed, then the number for the brick layed would be 142/2 (there are 28 brick in the top course) or 71.

2. Count the number of CMUs. Half CMUs count the same as whole CMUs. Do not divide this number by two. For example, the completed project has 10-8x8x16 units, 5-6x8x16 units, 5-4x8x16 units, and 4 halfs, giving a total of 24 block.

3. Add one and two. Look up the sum in the chart below and award the corresponding score (i.e. the examples in 1 and 2 would give a total of 95, so a score of 90 would be recorded). Record the score for the appropriate contestant number on the score sheet.

Sum	Score
85 - 95	90
75 - 85	80
65 - 75	70
55 - 65	60
45 - 55	50
35 - 45	40
<35	30

SkillsUSA MASONRY CHAMPIONSHIPS

JUDGING CRITERIA
JUNE 25, 2015

ITEM 9 - WRITTEN TEST
MAXIMUM POINTS = 100

Procedure

Results from the written exam.

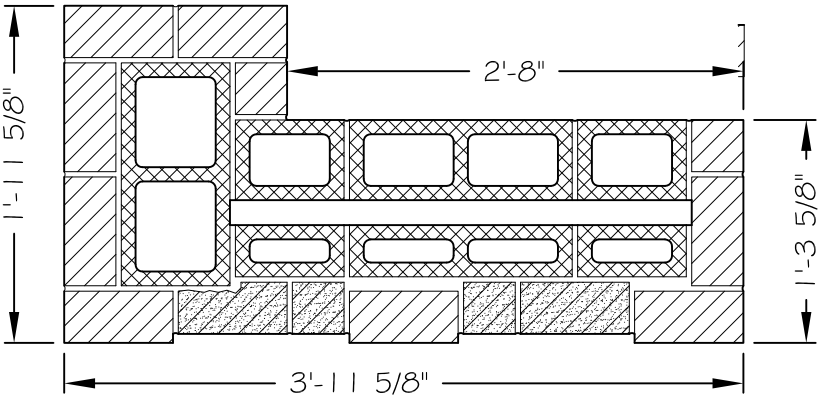

Plan

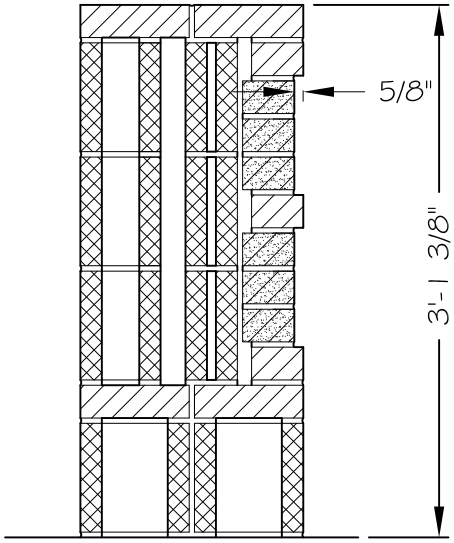

Section

Materials:

10 - 8" CMU
5 - 6" CMU
5 - 4" CMU
2 - Half 6" CMU
2 - Half 4" CMU
121 - Modular Brick - Type A
15 - Modular Brick - Type B
28 - Uncored Modular Brick - Type A

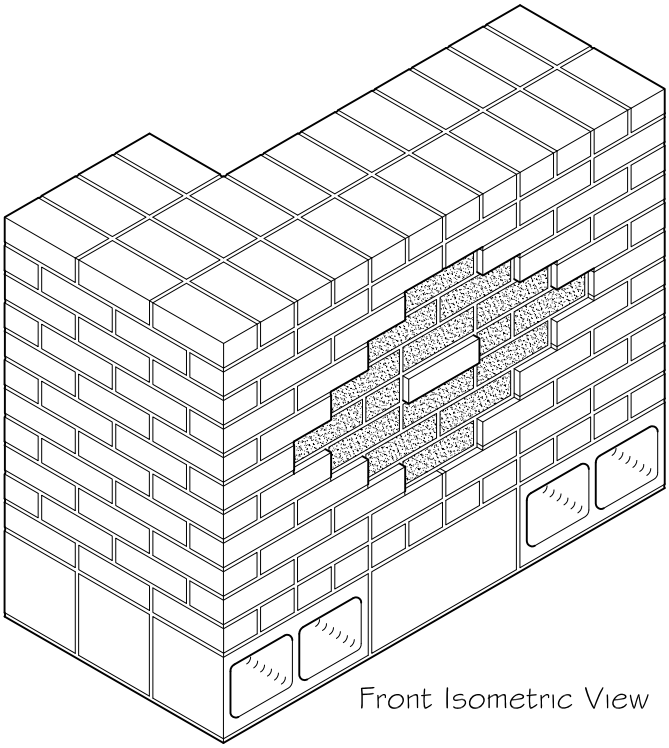

Front Isometric View

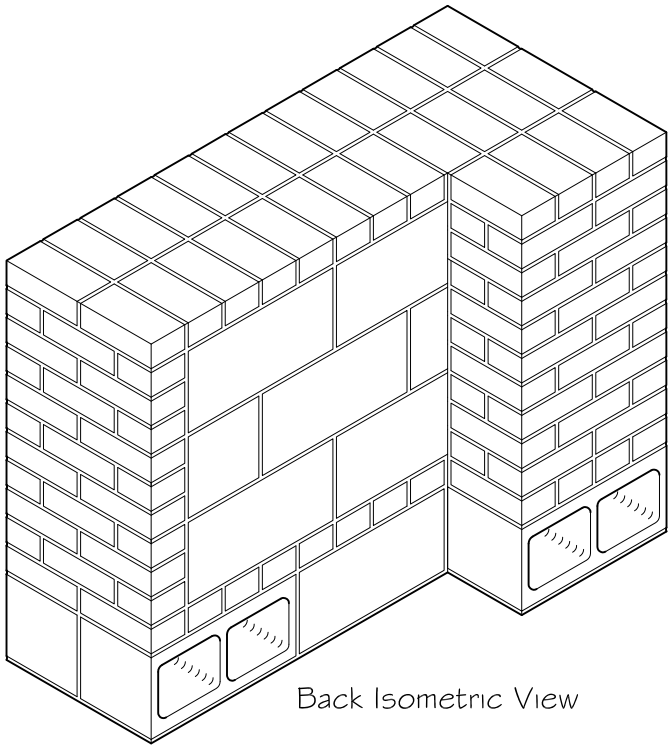

Back Isometric View

SKILLS USA MASONRY CHAMPIONSHIPS

MASONRY COMPETITION
JUNE 25, 2015

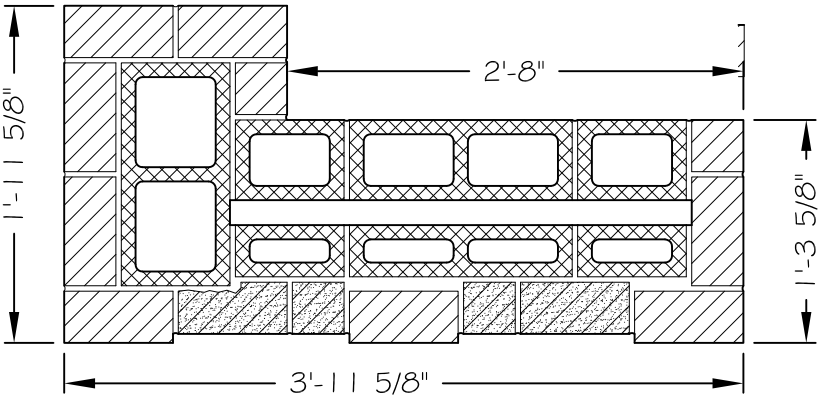

Plan

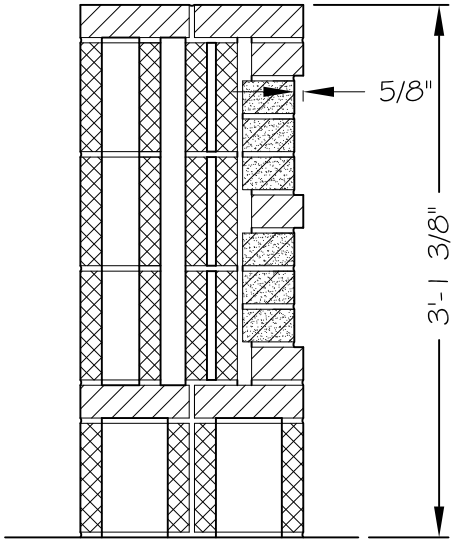

Section

Materials:

10 - 8" CMU
5 - 6" CMU
5 - 4" CMU
2 - Half 6" CMU
2 - Half 4" CMU
121 - Modular Brick - Type A
15 - Modular Brick - Type B
28 - Uncored Modular Brick - Type A

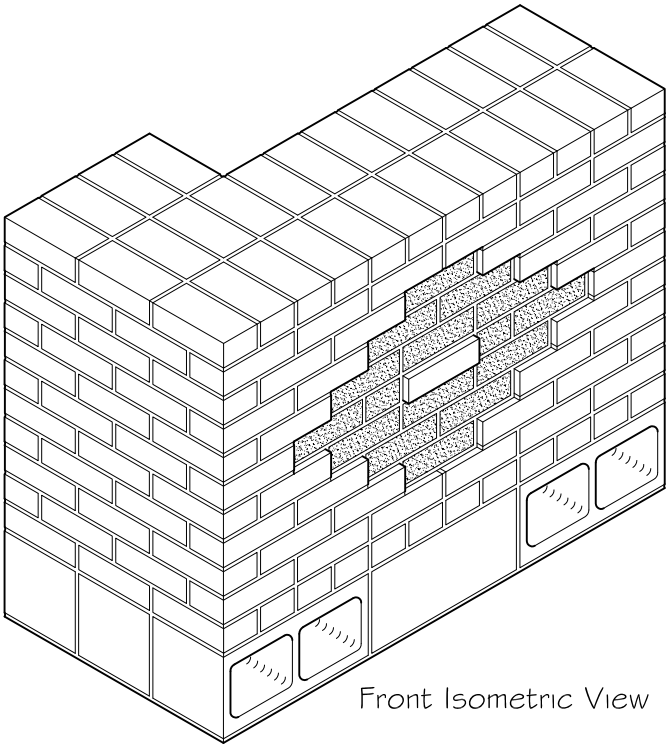

Front Isometric View

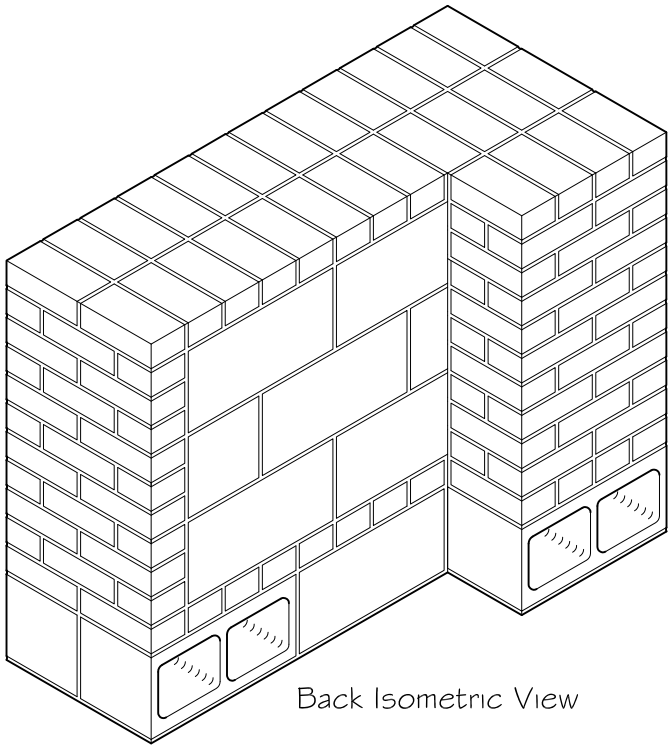

Back Isometric View

SKILLS USA MASONRY CHAMPIONSHIPS

MASONRY COMPETITION
JUNE 25, 2015

SkillsUSA
2015 Contest Projects

Mechatronics

Click the “Print this Section” button above to automatically print the specifications for this contest. Make sure your printer is turned on before pressing the button.

ELECTRO-PNEUMATICS

MAX. TIME: 90 MINUTES

MECHANICAL SYSTEMS

MAX. TIME: 90 MINUTES

MECLAB STATION

MAX. TIME: 30 MINUTES

MOTOR CONTROL

MAX. TIME: 30 MINUTES

ORAL EXAM/INTERVIEW

MAX. TIME: 15 MINUTES

SIEMENS PLC

MAX. TIME: 60 MINUTES

TROUBLESHOOTING

MAX. TIME: 15 MINUTES

Mechatronics

Download the CT files

Team #_____

SKILLSUSA 2015

Mechatronics PLR Exercise - 1.0 hours

SIEMENS LOGO!

Objective 1: Programmable Logic Relay (PLR) Siemens LOGO!

Modify and test a program using Function Blocks which controls a simple traffic light. The traffic light is initiated with a single switch which then cycles the lights, RED – YELLOW – GREEN with a 5 second timer for each light color. Build a program that adds "Walk" and "Don't Walk" elements to the program with flashing function. Add a counter to the program to count cycles

Objective 2: Message display

Bonus lab to complete an alarm message to display on the LOGO! disply window when the cycle reaches a 5 count.

PLR Tasks	Points	Score
1. Build the logic circuit	20	
2. Set parameters of pulse generator blocks	10	
3. Test using the software simulator	5	
4. Add the Counter block	10	
5. Able to explain the final logic / Neatness of program	10	
6. Download, run and monitor the program	5	
7. Follows instructions	10	
8. Use the HELP functions for parameter definitions	10	
9. Review the explain the existing PLC program w/ judge	10	
10. Bonus task 1 – add the message display	10	
TOTAL	100	

Contestant Number _____, _____ Sec

SkillsUSA
Mechatronics Competition

Construction Phase
Non-PLC

You have been assigned a Stacking Module and a computer. At the station, you will start with manual control of one output. You will then add a second output. Then add an input to control the output.

You will be evaluated on the neatness of the station (wiring, tubing) and the performance of the task. You will also need to explain your logic and pneumatic schematic to the judge. A judge must be present to record your times for each task.

Time END: _____

Time START: _____

Time Elapsed: _____

STACK:

1. Using the given file (SkillsUSA Exercise 1), finish the schematic so that pressing the virtual button causes the virtual lamp to light.

   Time Start: _____ Time End: _____ Elapsed Time: _____ (25)

2. Modify the circuit (SkillsUSA Exercise 2), so that pressing a virtual button causes the virtual cylinder to extend. Releasing the button causes the cylinder to retract.

   Time Start: _____ Time End: _____ Elapsed Time: _____ (25)

3. Modify the circuit (SkillsUSA Exercise 3), so that pressing the virtual button extends the REAL single-acting cylinder. Releasing the virtual button causes the REAL cylinder to retract.

   Time Start: _____ Time End: _____ Elapsed Time: _____ (50)

Contestant Number _____, _____ Sec

4. Modify the circuit (SkillsUSA Exercise 4), so that pressing one virtual button causes the REAL horizontal cylinder to extend. Pressing the other virtual button causes the REAL horizontal cylinder to retract.

   Time Start: _____ Time End: _____ Elapsed Time: _____ (50)

5. Modify the circuit (SkillsUSA Exercise 5), so that pressing the virtual button will extend the REAL horizontal cylinder. A sensor at the end of the horizontal cylinder causes the horizontal cylinder to retract automatically.

   Time Start: _____ Time End: _____ Elapsed Time: _____ (50)

6. Modify the circuit (SkillsUSA Exercise 6) so that pressing the virtual button will extend the REAL horizontal cylinder. When the cylinder is fully extended, it should retract and the REAL vertical cylinder will extend and stay extended for 3 seconds.

   Your completion task is to place three caps into the stack. Place one cup onto the holder and press the virtual button. A cap should be ejected onto the cup and pressed into place.

   Time Start: _____ Time End: _____ Elapsed Time: _____ (100)

Your scores are based on:

Proper operation of unit as described above. (Time will not be stopped until it has run properly)

Appearance (tubing and wiring neatly bundled; tubing and wiring bundled separately, blue tubing used to extend cylinders, black tubing to retract)

Diagram # 1

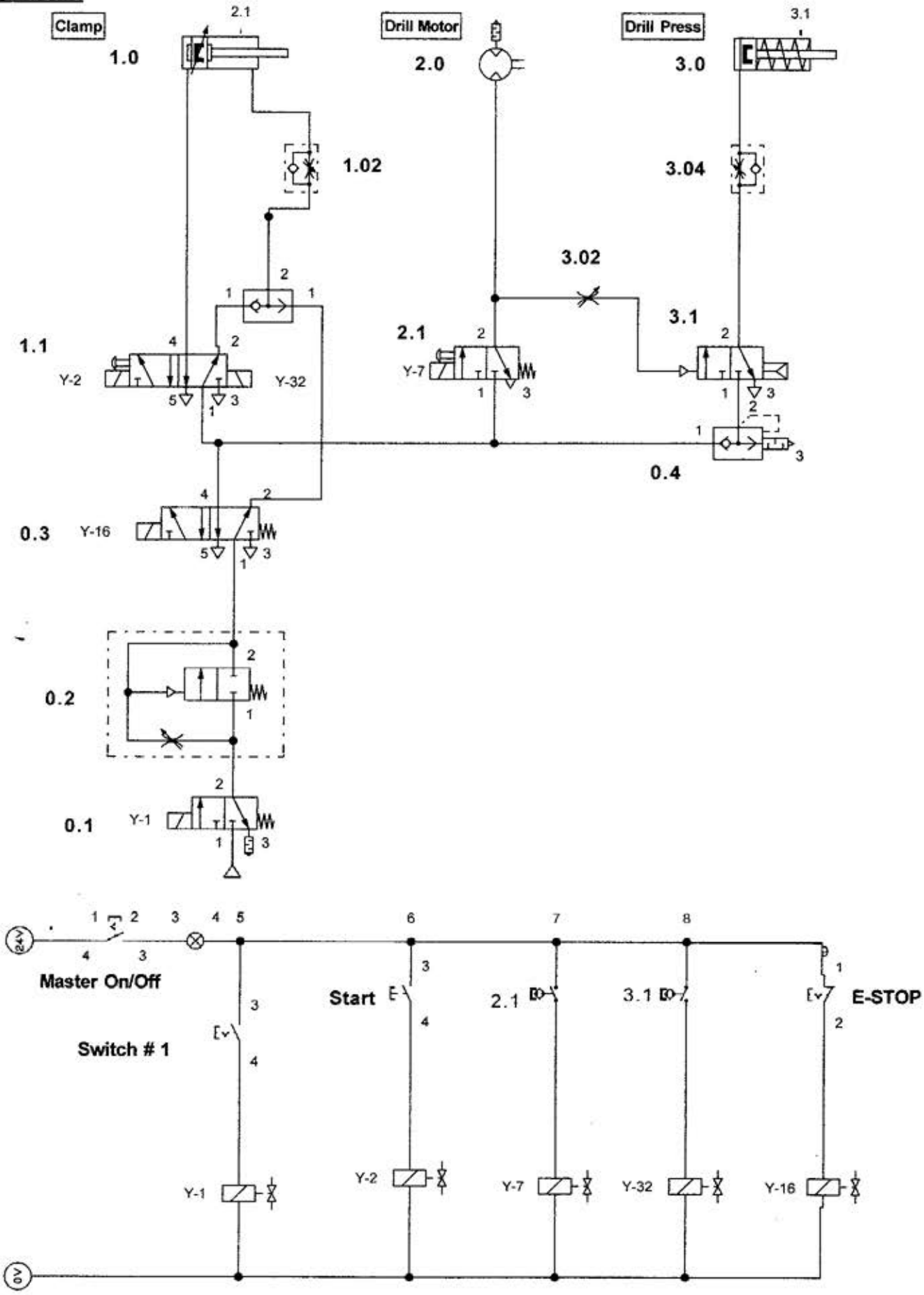
Clamp
Drill Motor
Drill Press
1.0
2.0
3.0
2.1
3.1
1.02
3.04
3.02
1.1
Y-2
Y-32
2.1
Y-7
3.1
0.4
0.3
Y-16
0.2
0.1
Y-1
24V
0V
Master On/Off
Switch # 1
Start
2.1
3.1
E-STOP
Y-1
Y-2
Y-7
Y-32
Y-16

Diagram # 2

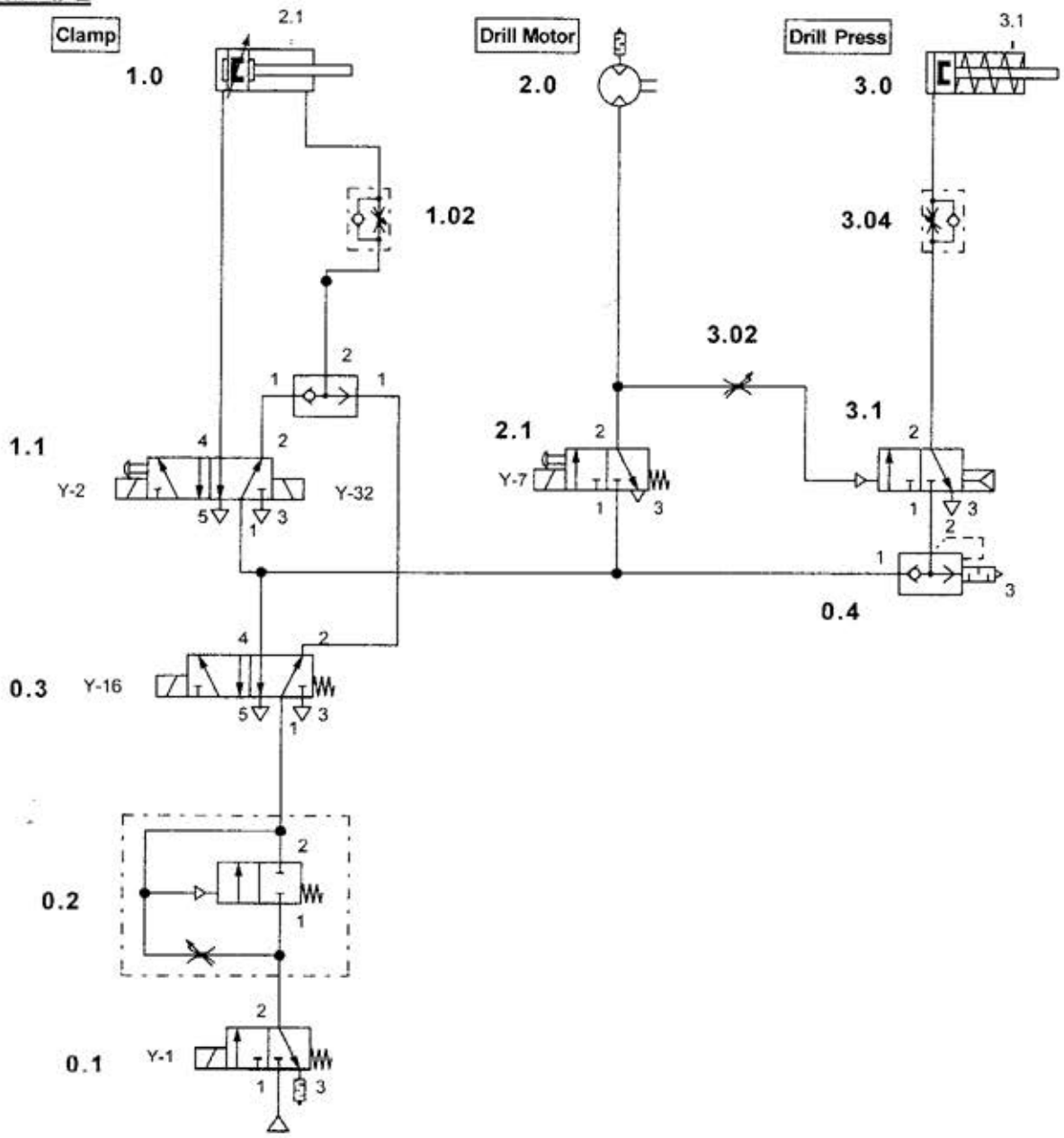
Clamp
Drill Motor
Drill Press
1.0
2.0
3.0
2.1
3.1
1.02
3.04
3.02
1.1
2.1
3.1
Y-2
Y-32
Y-7
0.4
0.3
Y-16
0.2
0.1
Y-1

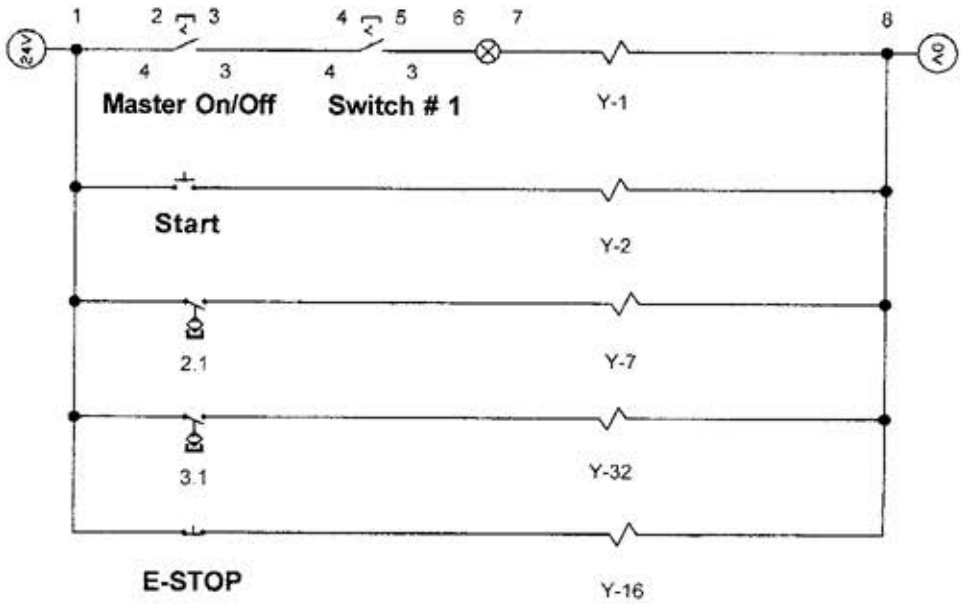
24V
0V
Master On/Off
Switch # 1
Y-1
Start
Y-2
2.1
Y-7
3.1
Y-32
E-STOP
Y-16

Diagram # 3

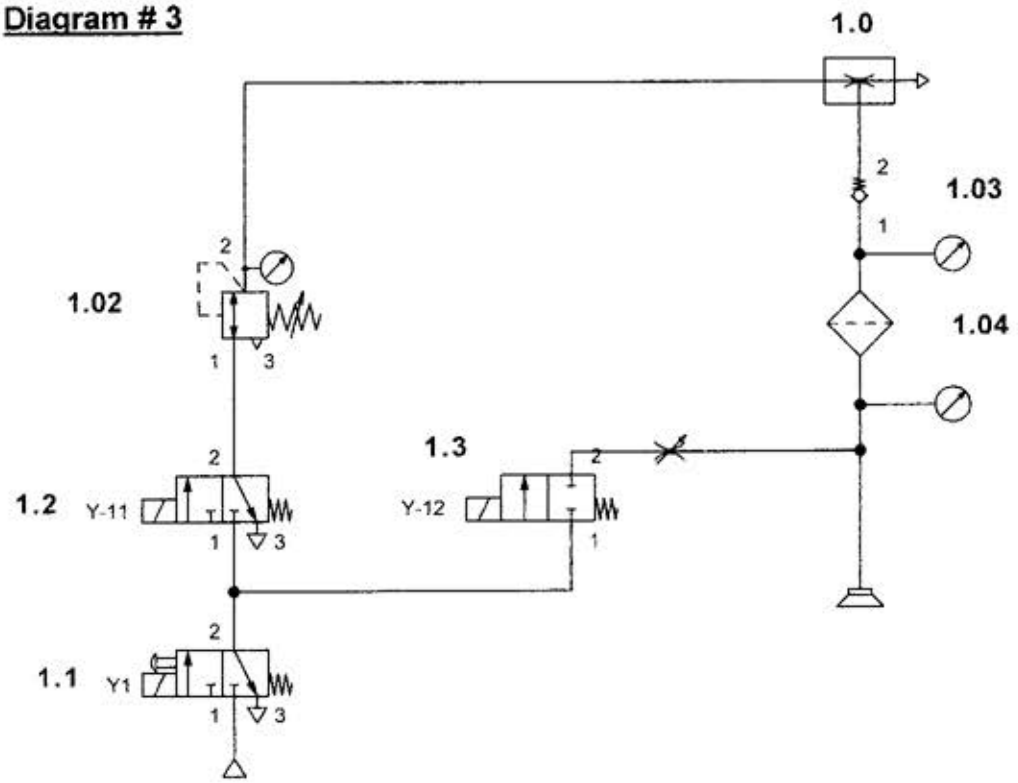
1.0
1.03
1.04
1.02
1.3
1.2
Y-11
Y-12
1.1
Y1

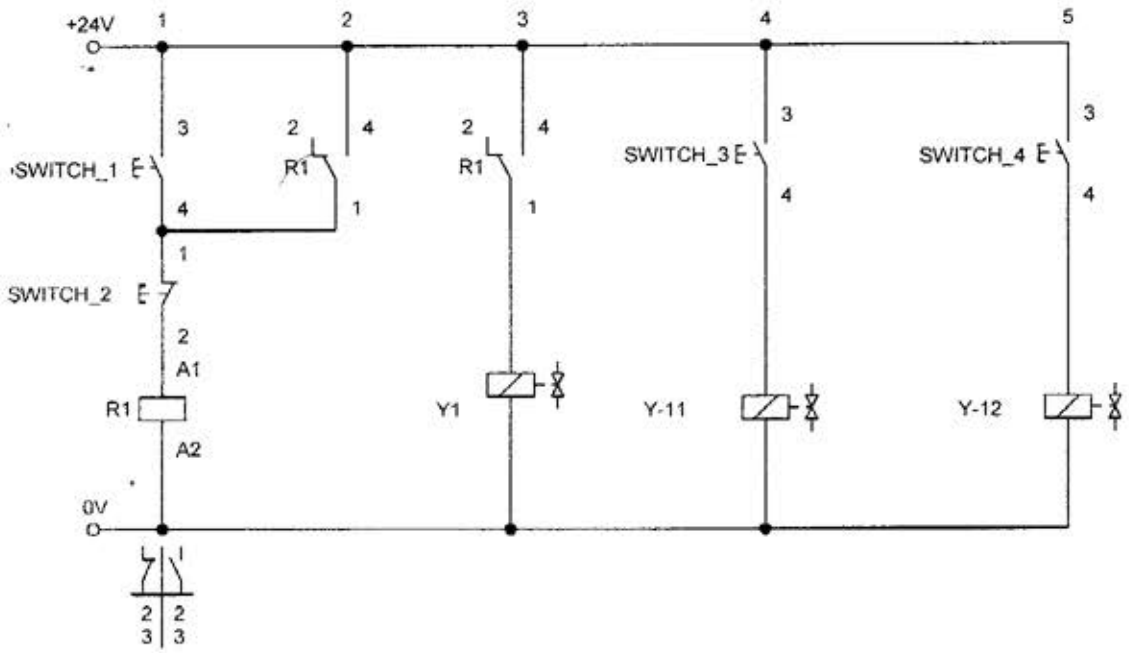
+24V
0V
SWITCH_1
SWITCH_2
SWITCH_3
SWITCH_4
R1
A1
A2
Y1
Y-11
Y-12

Diagram # 4

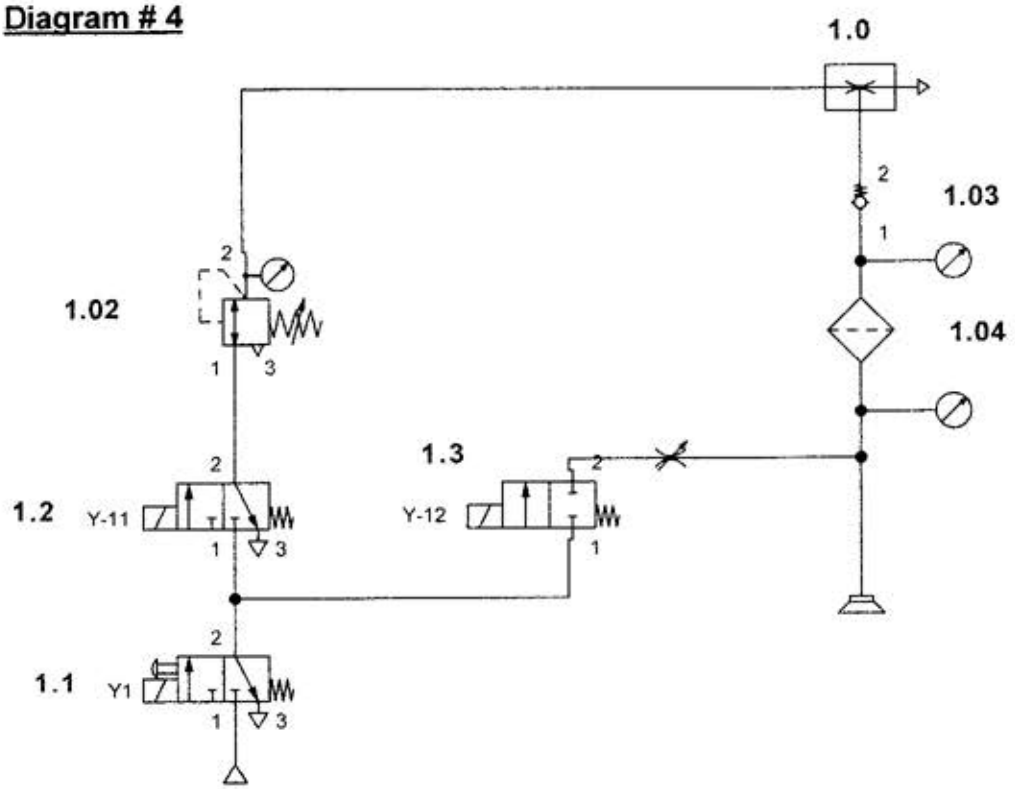
1.0
1.03
1.04
1.02
1.3
1.2
Y-11
Y-12
1.1
Y1

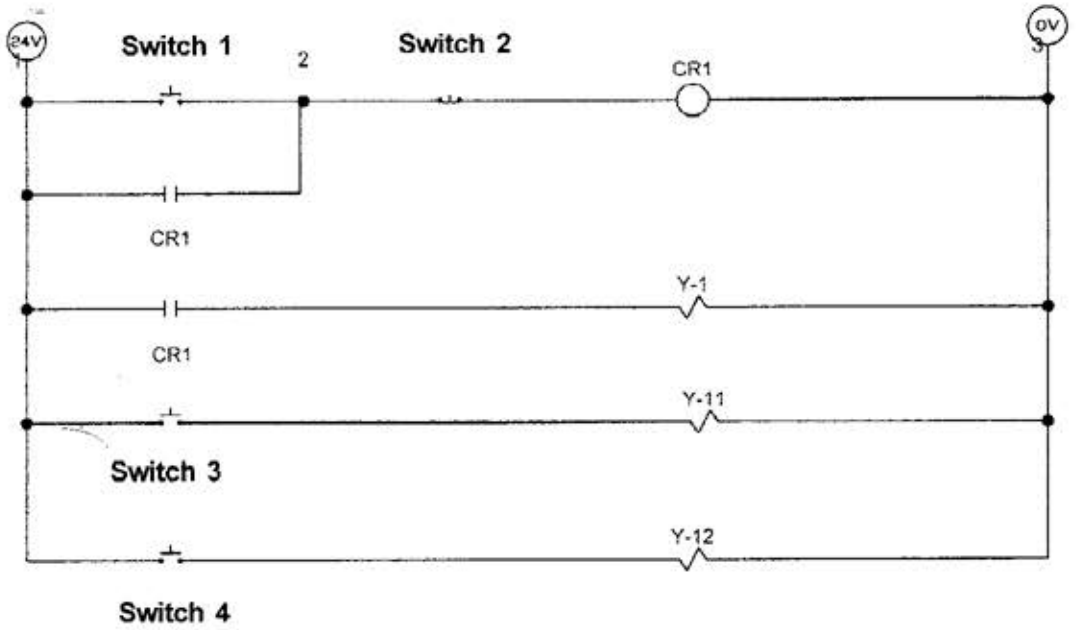
24V
Switch 1
Switch 2
CR1
0V
CR1
Y-1
CR1
Y-11
Switch 3
Y-12
Switch 4

Diagram # 5

1.0

1.1

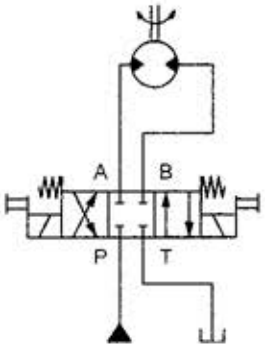

2.0

2.1

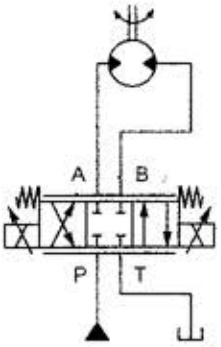

Diagram # 6

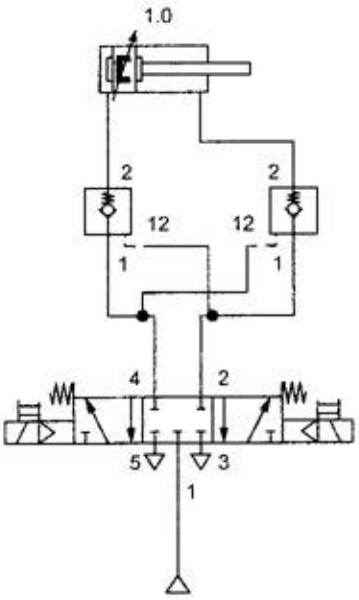

Situation # 1

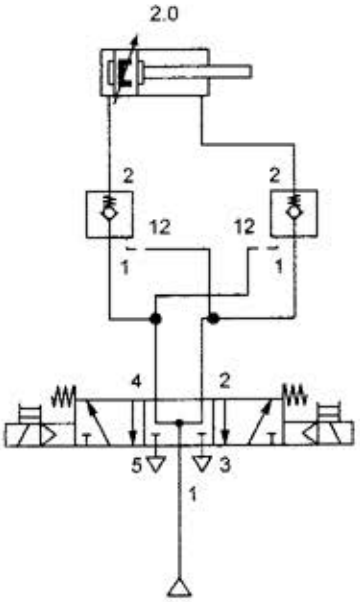

Situation # 2

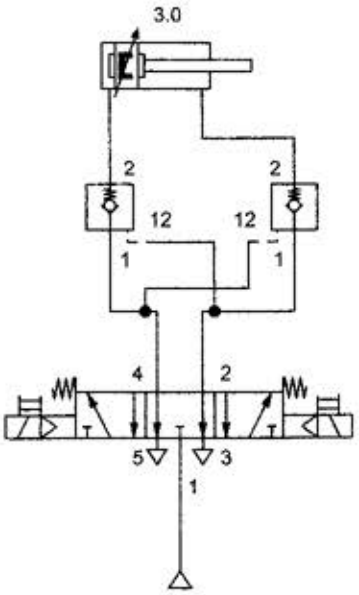

Situation # 3

Task #2: Integrating a Pick and Place Station to the Distribution Station for workpiece transfer

Points	500
t_{min}	fastest team
t_{max}	180 min

Situation

Your task is to add a partially assembled pick and place station so that a workpiece from the distribution station will be placed on the stage and the pick and place station will move the part from one stage to the other.

The task is fulfilled when the station is completely assembled and commissioned according to the professional practice agreement. The system has to fulfil the specifications according to the evaluation sheet.

Collisions are not allowed and will be heavily penalized.

Task Description

Three pieces are placed in the stack magazine of the Distribution station. The station will place the parts onto the stage of the pick and place station. The pick and place station will move each individual part from the outer stage to the inner stage.

The operator will remove the part from the second stage.

The distribution station must wait for the pick and place station to finish processing a part before another part can be introduced.

When the stack is empty, Q1 on the front of the panel must come on.

PLC program:

Initial situation:
A number (3) of workpieces are in the stack.

Max time: 150 min.

Team:

Description	Evaluation	Max. evaluation
Function will be checked by judge **IDENTIFY SENSOR AND FUNCTION BELOW**	**achieved points** **(I/O must match print)**	**Max points** **60**
O		5
O		5
O		5
O		5
O		5
I		5
I		5
I		5
I		5
I		5
I		5
Total		

STOP

Have your table inspected and initialed by a judge before proceeding!

Make sure you have filed out page 3 identically to this page!

Time: _____

Judge: _____

Description	Evaluation	Max. evaluation
Function will be checked by judge **IDENTIFY SENSOR AND FUNCTION BELOW**	**achieved points** **(I/O must match print)**	**Max points** **60**
O		5
O		5
O		5
O		5
O		5
O		5
I		5
I		5
I		5
I		5
I		5
I		5
Total		
Description	**Evaluation**	**Max. evaluation**
Function to check with plc program	**achieved points**	**Max points** **300**
Part deposited at pick and place outer platform		20
Distribution arm retracts		50
Gripper open		15
Cylinder out		15
Cylinder down		15
Gripper closes		15
Part lifted		50
Cylinder retracts in		15
Cylinder down		15
Gripper opens		15
Cylinder up		15
MPS station starts next cycle		60
Totals		

JUDGE COPY

Team: _____

Time: _____

Judge: _____

Description	Evaluation as a %-age of build completion	Max. evaluation
Professional practice		**90**
comments) All components securely mounted in correct position Professional appearance (cable guides, tie downs) Correct tubing: (blue to extend cylinders, black to retract) Collisions or Pinch Points: -5 each.	 30 30 30	

Description	Evaluation	Max. eval.
Time evaluation		
Time points are only possible when all points for function (with SimuBox and with plc) and minimum 4 points for professional practice are achieved!		
act. time	____. ____min.	Max time: 180 min.
Points for time = (max. time – act.time)x max.points /(max.time – min.time) = (180.0 - .....) x 10 points / (180.0 - .....)	___.___ **points**	**Max 50 points**

Total evaluation:

Description	evaluation	Max. eval.
Points for Function with I/O box	_____	**60**
Points for Function to check with plc board	_____	**300**
Points for professional practice	_____	**90**
Points for time evaluation	_____	**50**
Total points	_____	**500**

Expert evaluation team (names, signs)**:**

Task #1: Assembly, commissioning and programming of Distribution Station

Points	400
t_{min}	fastest team
t_{max}	180 min

Situation

Your task is to assemble, commission and program the Distribution station.

The task is fulfilled when the station is completely assembled and commissioned according to the professional practice agreement. The system has to fulfill the specifications according to the evaluation sheet.

Task Description

Different workpieces (red, silver or black) are manually put into the stack magazine.

The parts are ejected from the magazine, picked up by the swing arm and then deposited to the right of the station.

The cycle continues until the stack is empty, at which point operation stops and the LED in the start button and the lamp Q1 are illuminated.

It is necessary to reload the stack magazine and press the start button again before the machine starts up and cycle resumes.

PLC program:

Initial situation:
No workpieces are on the station

On power up, LED in reset button is “on”
Press reset to reset machine. Part ejector cylinder is extended, rotary arm is to the right and vacuum is off.

If successful, LED in reset button goes “off” and green start button is lit up.

Place 3 parts in magazine

Description	Evaluation	Max. evaluation
Function to check with SimuBox **IDENTIFY SENSOR AND FUNCTION BELOW**	**achieved points** **(I/O MUST match print)**	**Max points 160**
O0		5
O1		5
O2		5
O3		5
O4		5
O5		5
O6		5
O7		5
O8		5
O9		5
O10		5
O11		5
O12		5
O13		5
O14		5
O15		5
I0		5
I1		5
I2		5
I3		5
I4		5
I5		5
I6		5
I7		5
I8		5
I9		5
I10		5
I11		5
I12		5
I13		5
I14		5
I15		5
Total		

STOP

Have your table inspected and ititialed by a judge before proceeding!

Make sure you have filled out page 3 identically to this page!

Time: _____

Judge: _____

Description	Evaluation	Max. evaluation
Function to check with SimuBox **IDENTIFY SENSOR AND FUNCTION BELOW**	achieved points (I/O MUST match print)	Max points 160
O0		5
O1		5
O2		5
O3		5
O4		5
O5		5
O6		5
O7		5
O8		5
O9		5
O10		5
O11		5
O12		5
013		5
O14		5
O15		5
I0		5
I1		5
I2		5
I3		5
I4		5
I5		5
I6		5
I7		5
I8		5
I9		5
I10		5
I11		5
I12		5
I13		5
I14		5
I15		5
Total		

JUDGE COPY

Team: ___

Time: _____

Judge: _____

Description	Evaluation	Max. evaluation
Function to check with plc program	**achieved points**	**Max points 100**
Preparation: Connect PLC to the I/O-terminal of the station, prepare and start the PLC		
(remove all workpieces from the station)		
Power up: Is RESET on?		5
Part ejector cylinder extended		5
Rotary arm to right		5
Vacuum off		5
Green “Start LED” on		5
Place 3 parts in magazine		
Press Start		
Green “Start LED” off		5
Cycle Begins		5
Check to see if part is available?		10
If no, Turn on lamp Q1		5
If no, Turn on LED in start		5
Otherwise: part ejector cylinder retracts to eject part		10
Rotary arm to left		
Vacuum on		5
Part gripped?		5
Part ejector cylinder extends		
Swing arm to right		5
Vacuum off		10
No air flow (vacuum OR blow-off) at suction cup		10
RETURN TO “Cycle Begins”		
Total (100)		

Description	Evaluation	Max. evaluation
Professional practice	As a %-age of build completion	**100**
(comments) All components securely mounted in correct position Professional appearance (cable guides, tie downs) Correct tubing: (blue to extend cylinders, black to retract) Collisions or Pinch Points: -5 each.	 20 50 30	

Description	Evaluation	Max. eval.
Time evaluation		**40**
Time points are only possible when all points for function (with SimuBox and with PLC) and minimum 4 points for professional practice are achieved!		
act. Time	____. ____min.	Max time: 180 min.
Points for time = (max. time – act.time)x max.points /(max.time – min.time) = (180.0 - .....) x 10 points / (180.0 - .....)	___.___ **points**	**Max 40 points**

Total evaluation:

Description	evaluation	Max. eval.
Points for Function with I/O box	_____	**160**
Points for Function to check with PLC board	_____	**100**
Points for professional practice	_____	**100**
Points for time evaluation	_____	**40**
Total points	_____	**400**

FESTO

Distribution station
Function chart

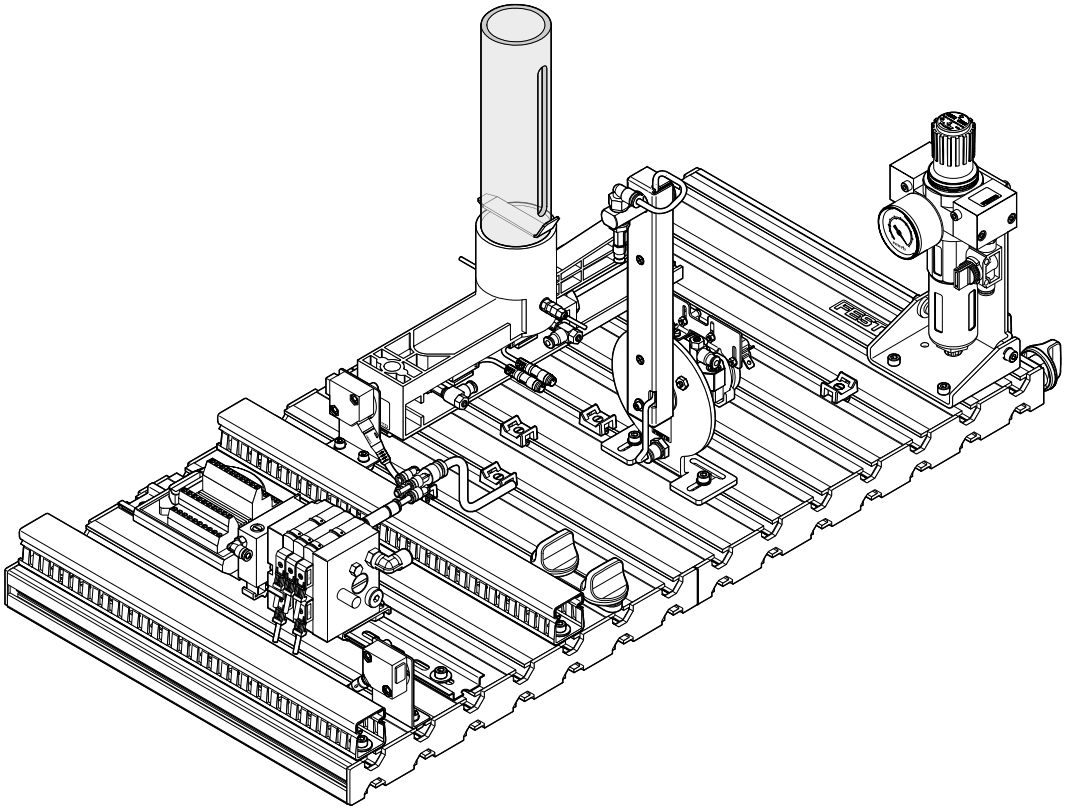

DE
01/04

Function chart according to DIN EN 60848

The following figure displays a comparison of symbols of DIN 40719-6 (1992-02) and symbols of DIN EN 60848 (2002-12).

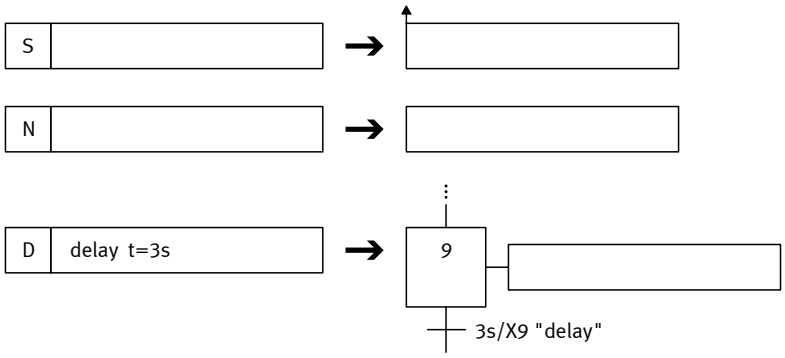

Left: DIN 40719-6; right: DIN EN 60848

Note
The standard DIN 40719-6 is valid until 2005-04.

DIN 40719-6 1992-02	Diagrams, charts, tables; rules for function charts; (IEC 848 modified)
DIN EN 60848 2002-12	GRAFCET specification language for sequential function charts; (IEC 60848)

© Festo Didactic GmbH & Co. KG • MPS

Function chart Distribution station

sequential function chart according to DIN EN 60848 (IEC 60848) for the Distribution station
1-bit-link

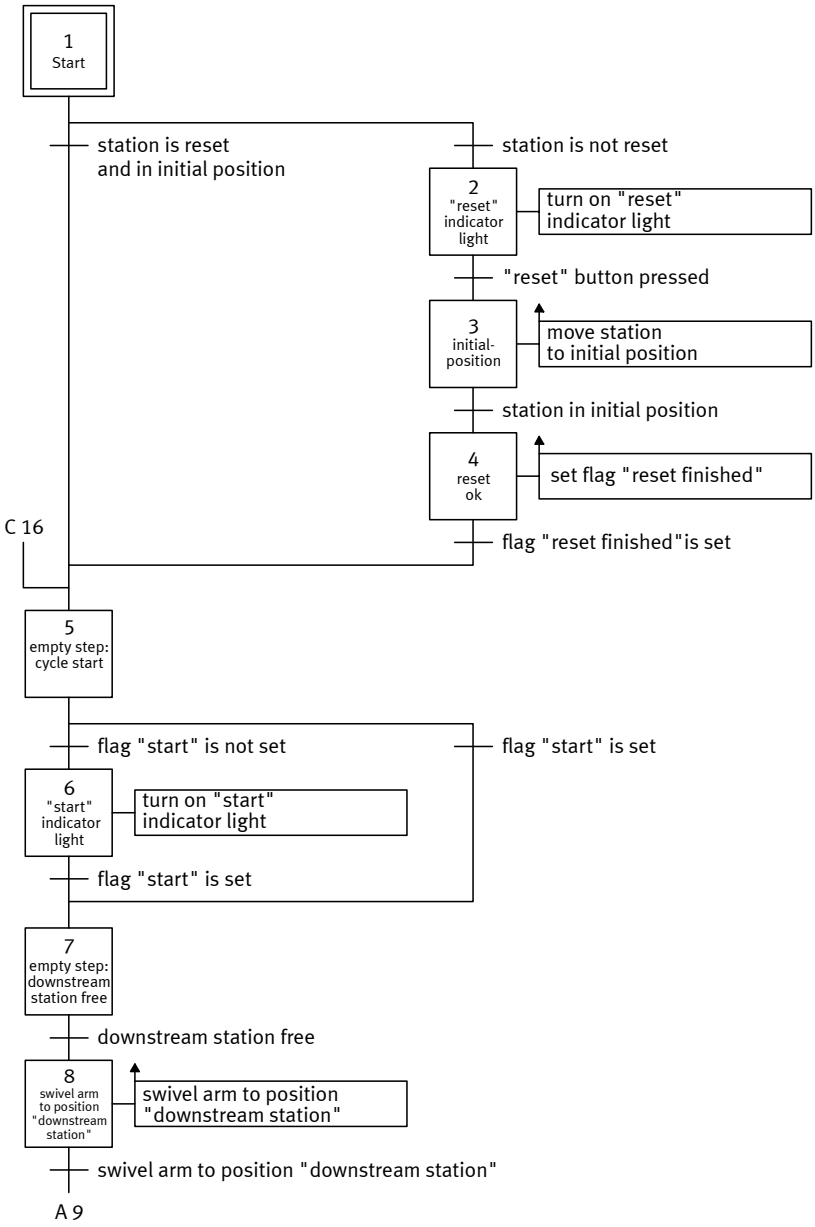

Function chart Distribution station

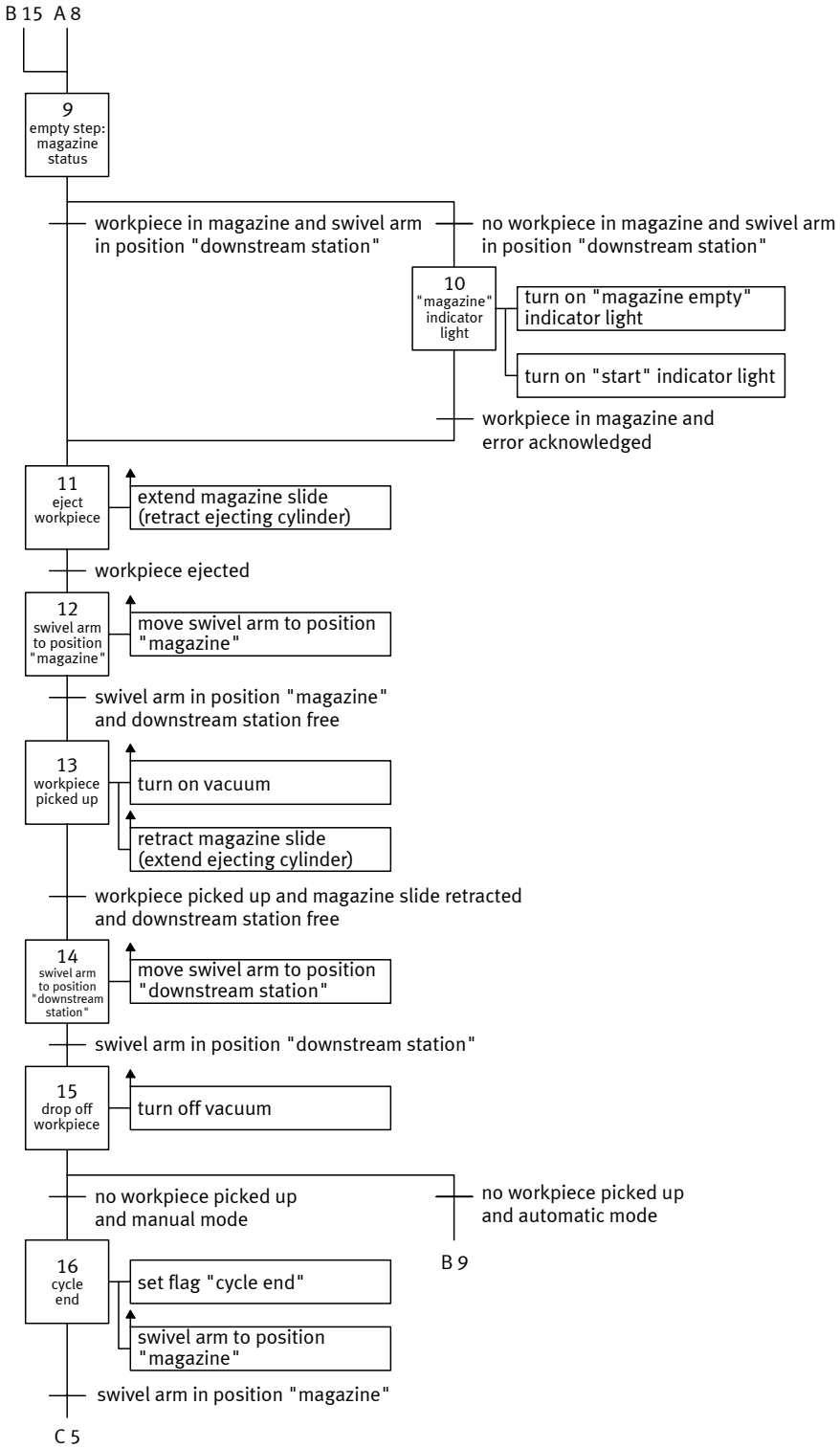

© Festo Didactic GmbH & Co. KG • MPS

FESTO

Distribution station
Assembly
Instructions

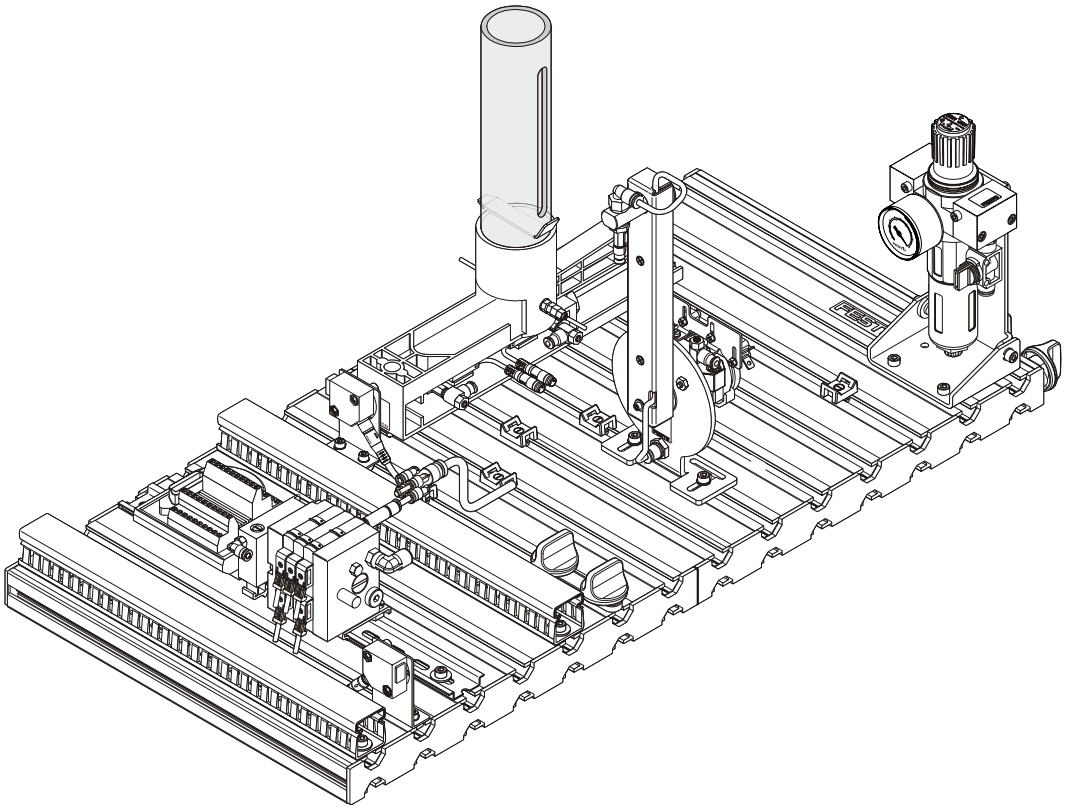

EN
10/02

Intended use

This station has been developed and produced exclusively for vocational and further training in the field of automation and communication. The training authority and/or the instructors are to ensure that trainees observe the safety instructions described in the manual provided.

Festo Didactic herewith rules out all liability for damage or injury to trainees, the training authority or other third parties which may occur during the use/operation of this equipment other than purely in a training situation, unless it can be proved that Festo Didactic has caused such damage or injury through malicious intent or gross negligence.

Description	MONT.ANLEIT
Designation:	D:MP-MA-S-VERT-1-GB
Status:	11/2002
Author:	Frank Ebel
Graphics:	Doris Schwarzenberger, Albert Sigel
Layout:	11/2002

© Festo Didactic GmbH & Co., D-73770 Denkendorf, 2002

Internet: www.festo.com/didactic

e-mail: did@festo.com

The copying, distribution and utilisation of this document, as well as the communication of its contents to others without the express authorisation of Festo Didactic is prohibited. Offenders will be held liable for the payment of damages. All rights reserved, in particular the right to carry out patent, utility model or ornamental design registration

Contents

1. Notes on safety 5

2. Short description 6

3. Views and tools 8
3.1 Views 8
3.2 Tools 9

4. Assembling the station 10
4.1 Step 1 10
4.2 Step 2 11
4.3 Step 3 12
4.4 Step 4 13
4.5 Step 5 14
4.6 Step 6 15
4.7 Step 7 17
4.8 Step 8 18
4.9 Step 9 19

© Festo Didactic GmbH & Co. • Distribution station

1. Notes on safety

In the interests of your own safety, please observe the following safety instructions:

General

- Trainees must only work on a station under the supervision of an instructor.
- Observe the data in the data sheets for the individual components, particularly all safety instructions!

Electrical

- Electrical connections are to be wired-up or disconnected only when the power supply is turned off!
- Use only extra-low-voltages of up to max. 24 V DC.

Pneumatic

- Do not exceed the maximum permissible pressure of 8 bar (800 kPa).
- Do not switch on the compressed air supply until you have established and secured all tubing connections.
- Do not disconnect air lines under pressure.
- Particular care is to be taken when switching on the compressed air supply. Cylinders may advance or retract as the compressed air is switched on.

Mechanical

- Attach all components securely on the mounting plate.
- No manual intervention is to take place unless the machine is at rest.

2. Short description

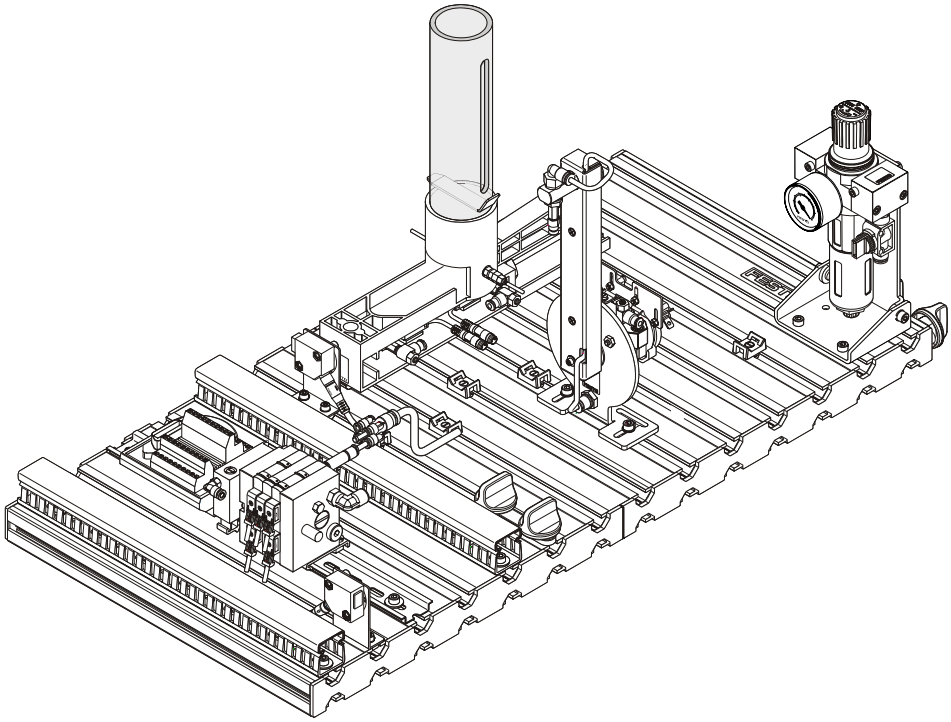

View of the Distribution station

The Distribution station is a feed device. According to VDI 3240, feed devices are defined as units which fulfill the function of bunkering, sorting and feeding of components. In addition, feed devices can facilitate the sorting of components according to various sorting characteristics (shape, weight etc. of the component).

The following are feed devices:
- Magazines with feed limiting,
- Vibratory bowl feeder,
- Inclined conveyors and
- Hoppers with sorting devices.

Workpieces handled by feed devices are
- Electroplated parts,
- Shaped parts made of plastic,
- Punched parts and
- Turned components.

© Festo Didactic GmbH & Co. • Distribution station

The function fo the Distribution station is

- to separate out workpieces from a magazine and
- to transfer workpieces by means of a rotary drive using a suction cup.

The Distribution station consists of the following:

- Stack magazine module
- Changer module
- Profile plate

- Trolley
- Control console
- PLC board

3. Views and tools

3.1
Views

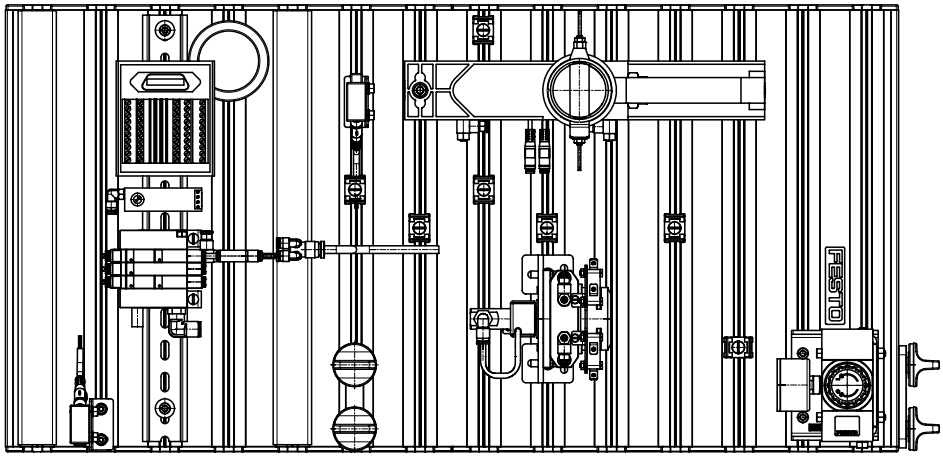

Distribution station, plan view

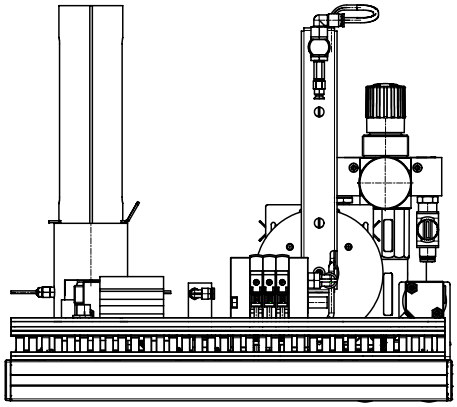

Distribution station, r.h. side view

© Festo Didactic GmbH & Co. • Distribution station

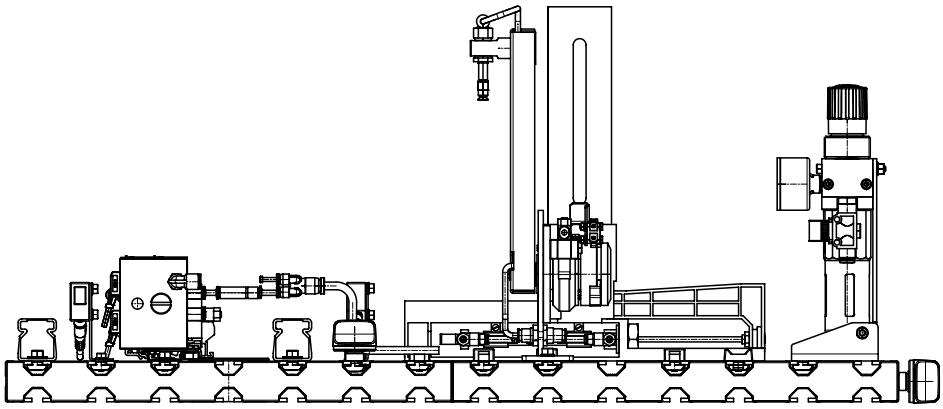

Distribution station, front view

3.2
Required tools

Tube spanner, 9 x 10 mm

Open-ended spanners 6 x 7, 12 x 13, 22 x 24 mm

Slot-head screwdriver, 3.5 mm

Allen key, 5 mm

4. Assembling the station

4.1
Step 1

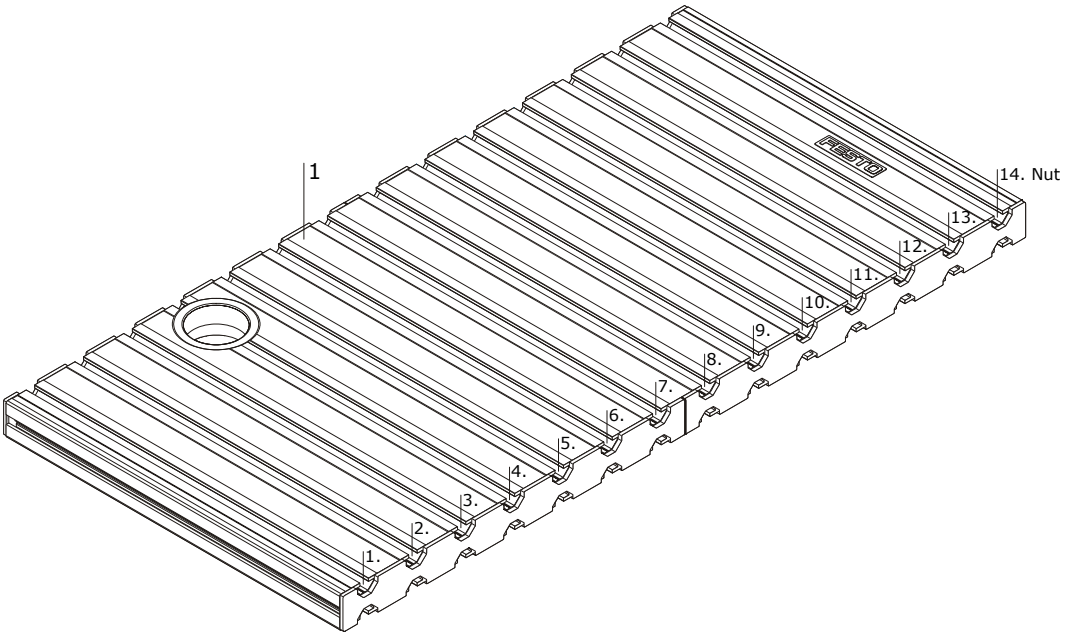

1 Profile plate

© Festo Didactic GmbH & Co. • Distribution station

4.2
Step 2

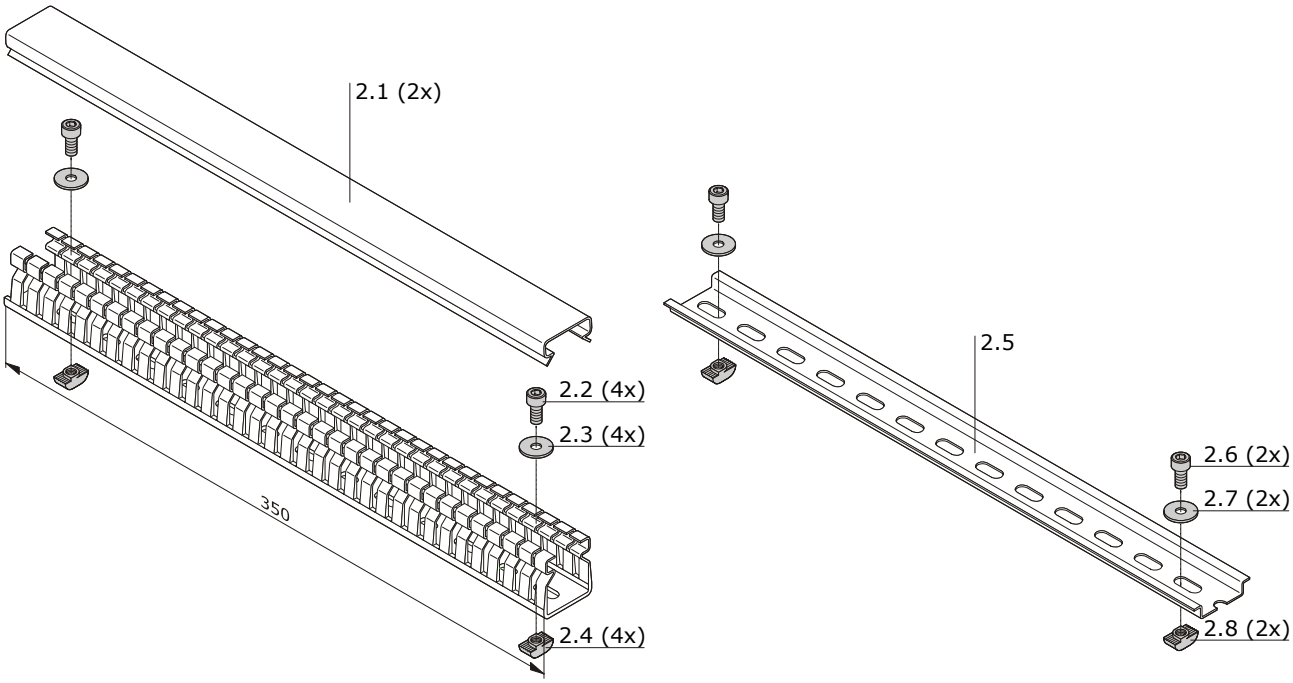

2.1 Cable duct

2.2 Socket-head screw M5 x 10

2.3 Washer B5.3

2.4 T-head nut M5-32

2.5 Mounting rail

2.6 Socket-head screw M5 x 10

2.7 Washer B5.3

2.8 T-head nut M5-32

4.3
Step 3

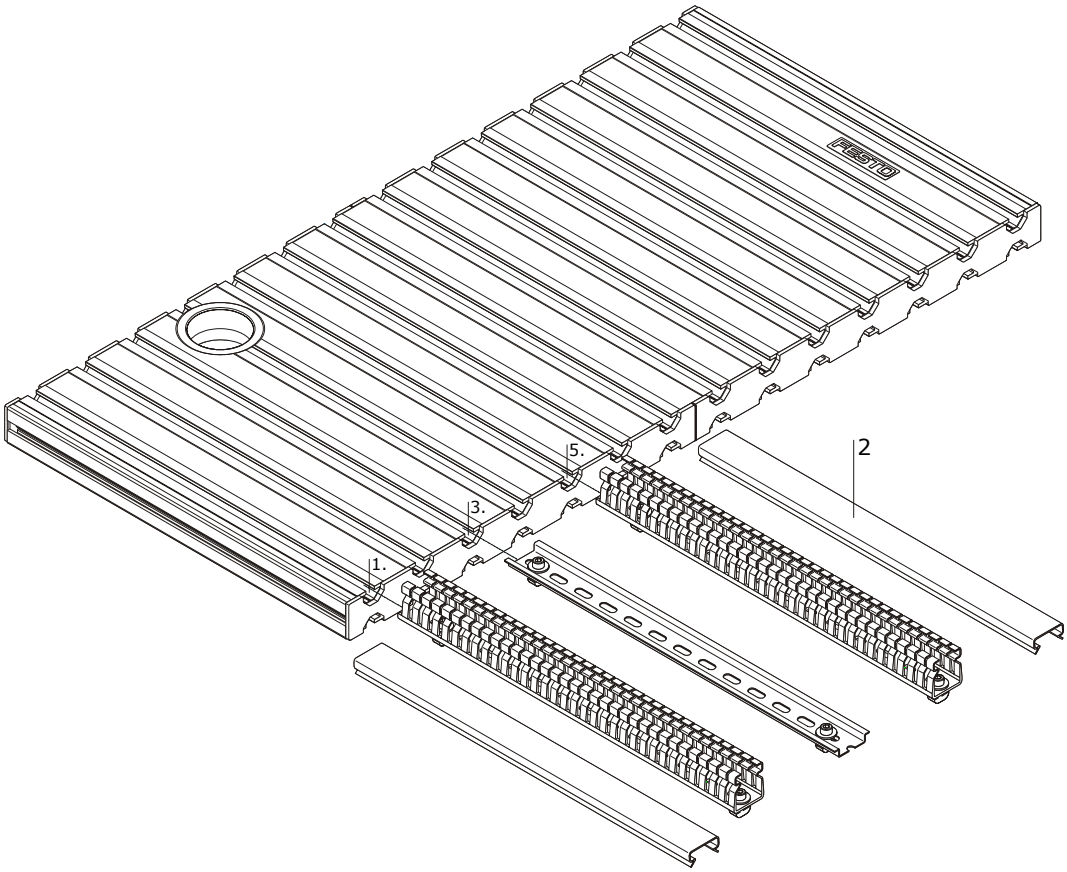

2 Mounting the electrical system

© Festo Didactic GmbH & Co. • Distribution station

4.4
Step 4

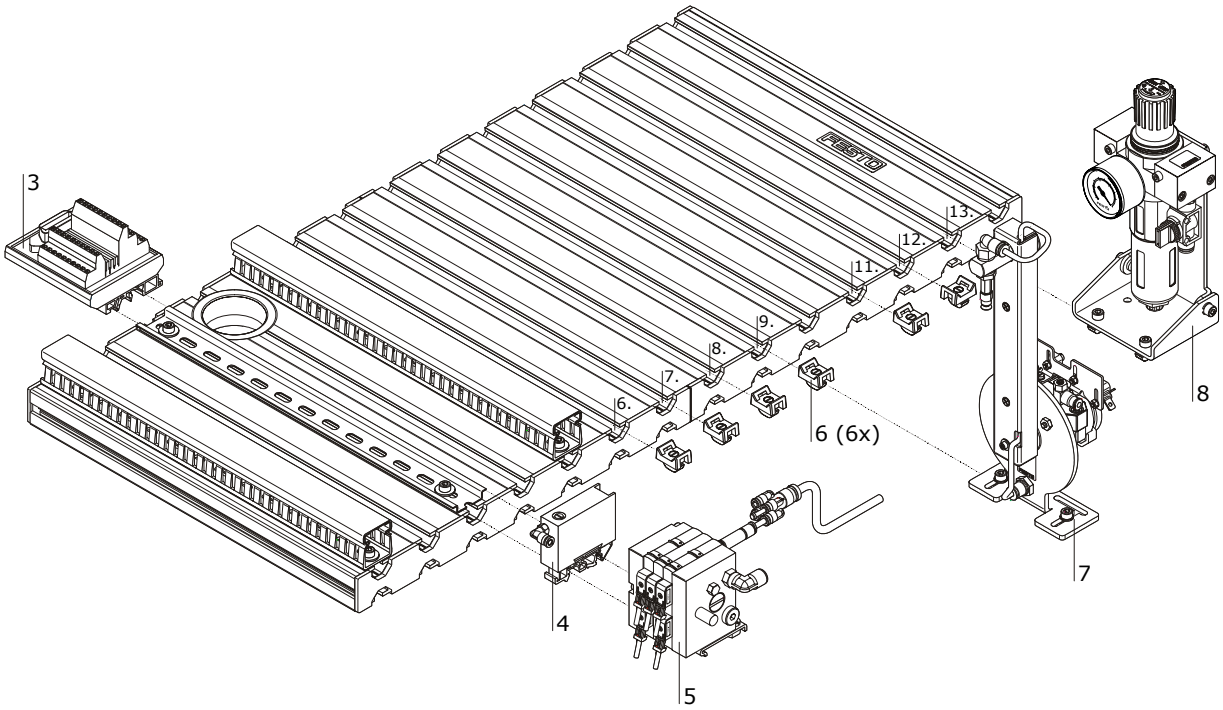

3	I/O terminal
4	Vacuum switch
5	CP valve terminal
6	Cable clip (6x)
7	Changer module
8	Service unit

4.5
Step 5

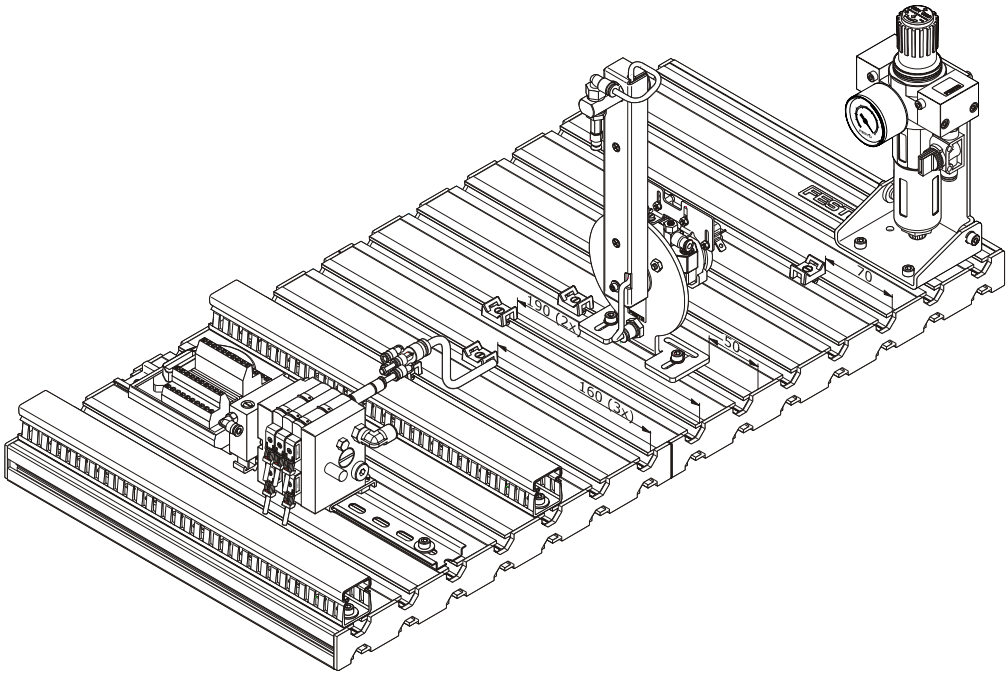

Position of Changer module and cable clips

© Festo Didactic GmbH & Co. • Distribution station

4.6
Step 6

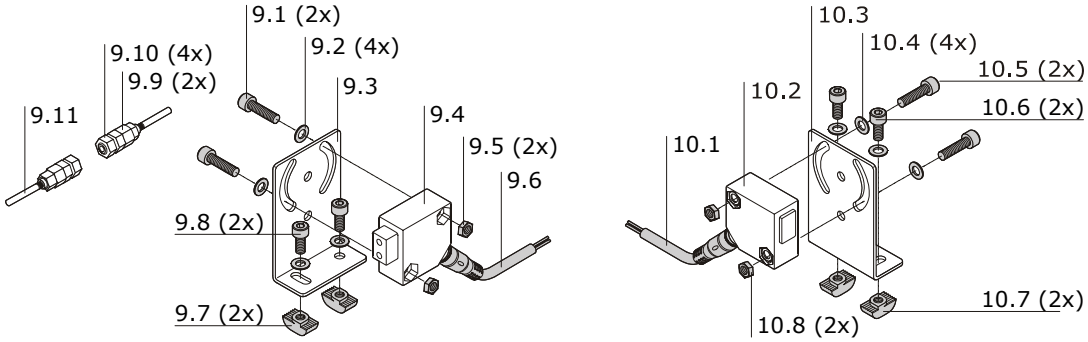

9.1 Socket head screw M 4 x 16 (2x)

9.2 Washer B 4.3 (4x)

9.3 Mounting bracket

9.4 Fibre optic device

9.5 Nut M 4 (2x)

9.6 Socket connector cable

9.7 T-head nut M 4-32 (2x)

9.8 Socket head screw M 4 x 10 (2x)

9.9 Adapter(2x)

9.10 Nut M 5 (4x)

9.11 Fibre optic cable “Light barrier”

10.1 Socket connector cable

10.2 StationLink receiver

10.3 Mounting bracket

10.4 Washer B 4.3 (4x)

10.5 Socket head screw M 4 x 16 (2x)

10.6 Socket head screw M 4 x 10 (2x)

10.7 T-head nut M 4-32 (2x)

10.8 Nut M 4 (2x)

© Festo Didactic GmbH & Co. • Distribution station

4.7
Step 7

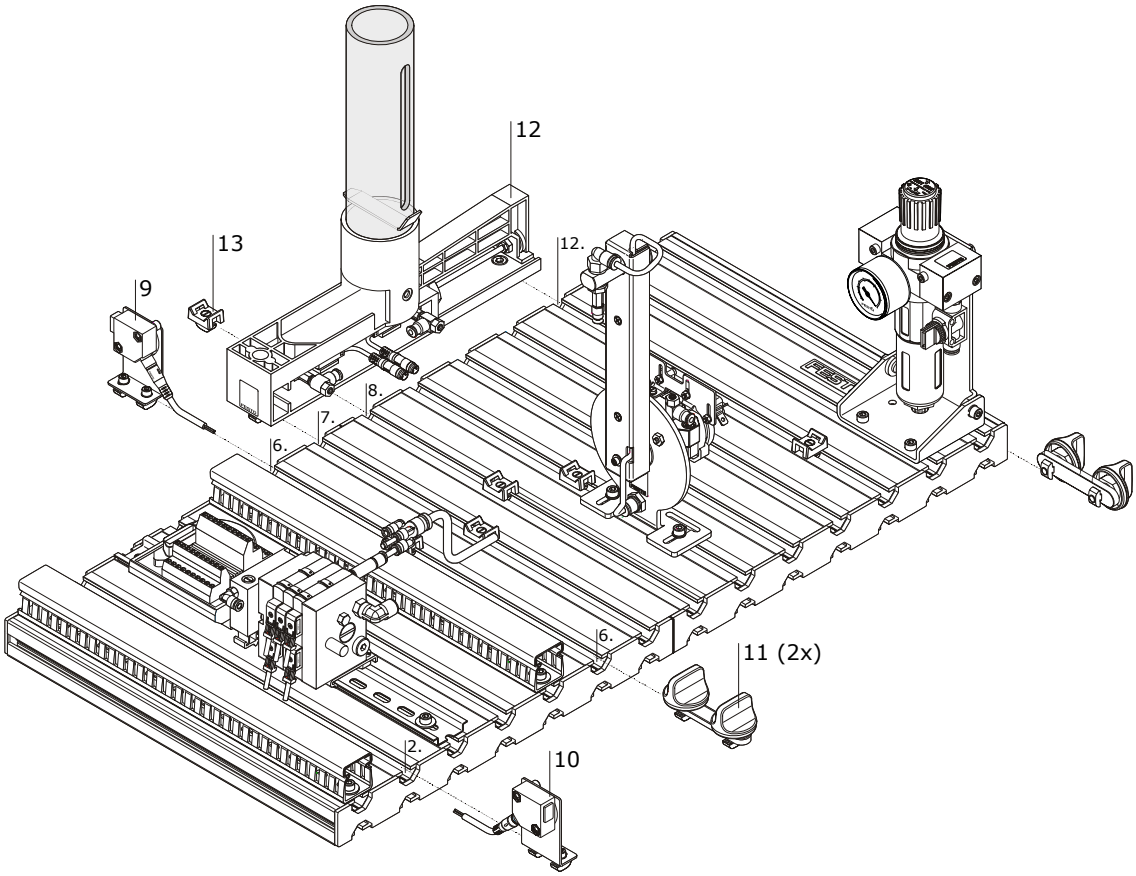

9	Fibre optic device
10	StationLink receiver
11	Connector (2x)
12	Stack magazine module
13	Cable clip

4.8
Step 8

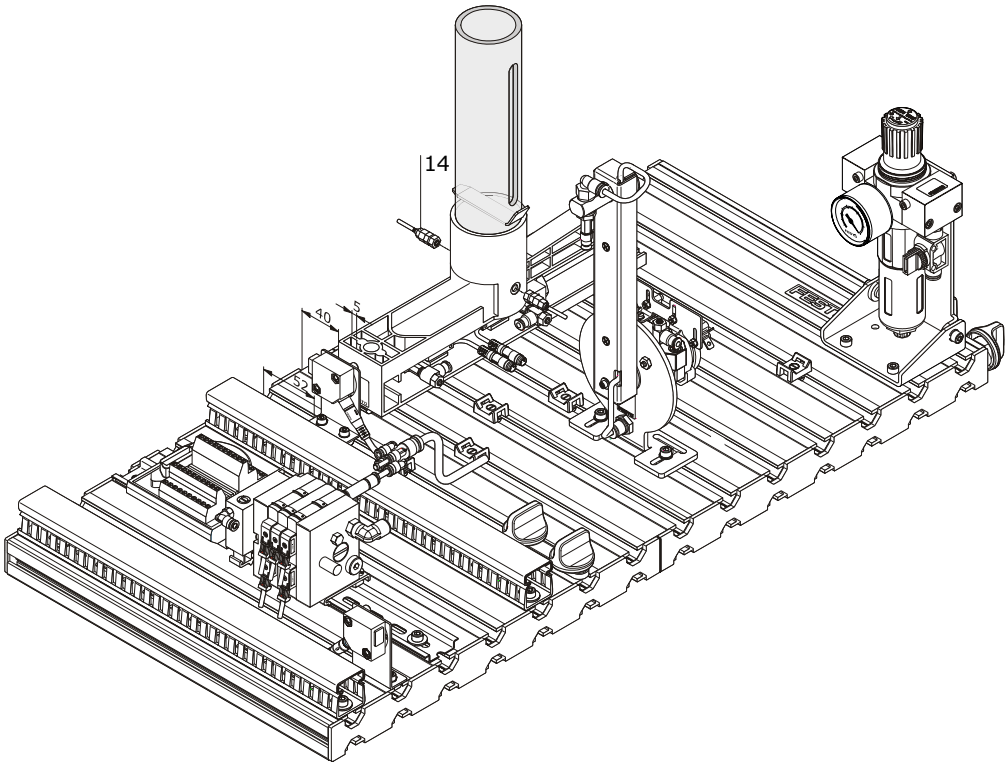

Complete assembling of Stack magazine module and cable clips

14 Fibre optic cable “Light barrier”

© Festo Didactic GmbH & Co. • Distribution station

4.9
Step 9

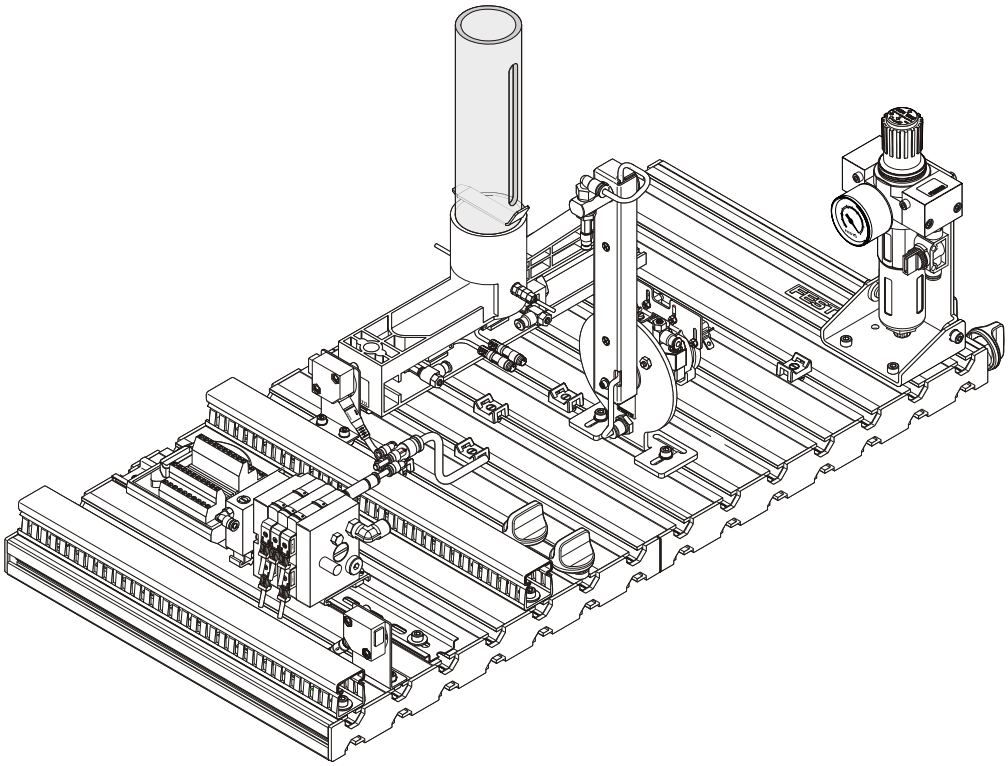

Station completely assembled

© Festo Didactic GmbH & Co. • Distribution station

Diese Zeichnung ist Eigentum der Festo Didactic GmbH & Co. KG

Schaltungsunterlagen / Circuit diagrams

System MPS-C
MPS® Station Verteilen
MPS® Distributing station

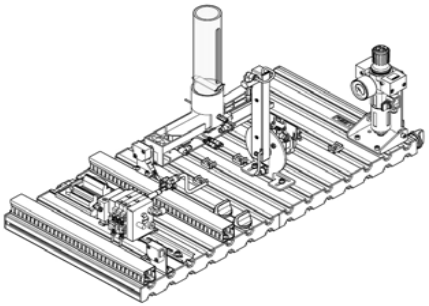

Date	22.03.06	Festo Didactic GmbH & Co. KG Rechbergstraße 3 D-73770 Denkendorf	FESTO	Titelblatt Title page	MPS-C
Konstr.	MBEL				DPJ VN STATION
Certif.					
Drw-No	195780 el.	R.: FDMR02E F.: R:\EPLAN4\P\FESTO_MPS\STATION\01_VE_DI.P			

Verteilen/Distributing	
=	Pg. 1
+	last: 5

Inhaltsverzeichnis / Index page

Anlage / Station	Seite / Page	Seitenbenennung	Page description	Datum / Date	Bearbeiter	X
	1	Titelblatt	Title page	22.03.06	MBEL	
	2	Inhaltsverzeichnis	Index page	05.04.06	FAA	
	3	Aufbauplan	Layout	28.02.06	MBEL	
	4	Station Eingänge	Station inputs	05.04.06	MBEL	
	5	Station Ausgänge	Station outputs	05.04.06	MBEL	

Diese Zeichnung ist Eigentum der Festo Didactic GmbH & Co. KG

Diese Zeichnung ist Eigentum der Festo Didactic GmbH & Co. KG

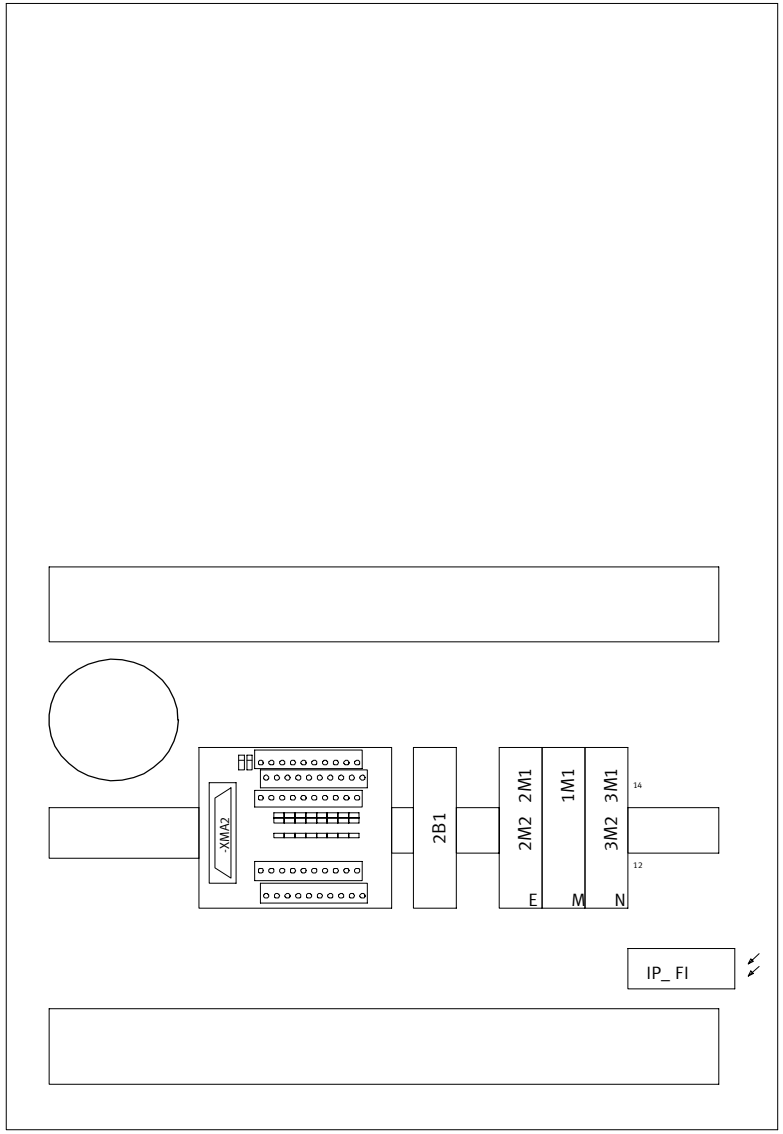

XMA2 = Syslink Station / station

XMG1 = Syslink Bedienpanel / control console

Date	28.02.06	Festo Didactic GmbH & Co. KG Rechbergstraße 3 D-73770 Denkendorf	FESTO	Aufbauplan Layout	MPS-C / Verteilen/Distributing
Konstr.	MBEL				DPJ STATION VN / = / Pg. 3
Certif.					+ / last: 5
Drw-No	195780 el.	R.: FDMR02E F.: R:\EPLAN4\P\FESTO_MPS\STATION\01_VE_DI.P			

Diese Zeichnung ist Eigentum der Festo Didactic GmbH & Co. KG

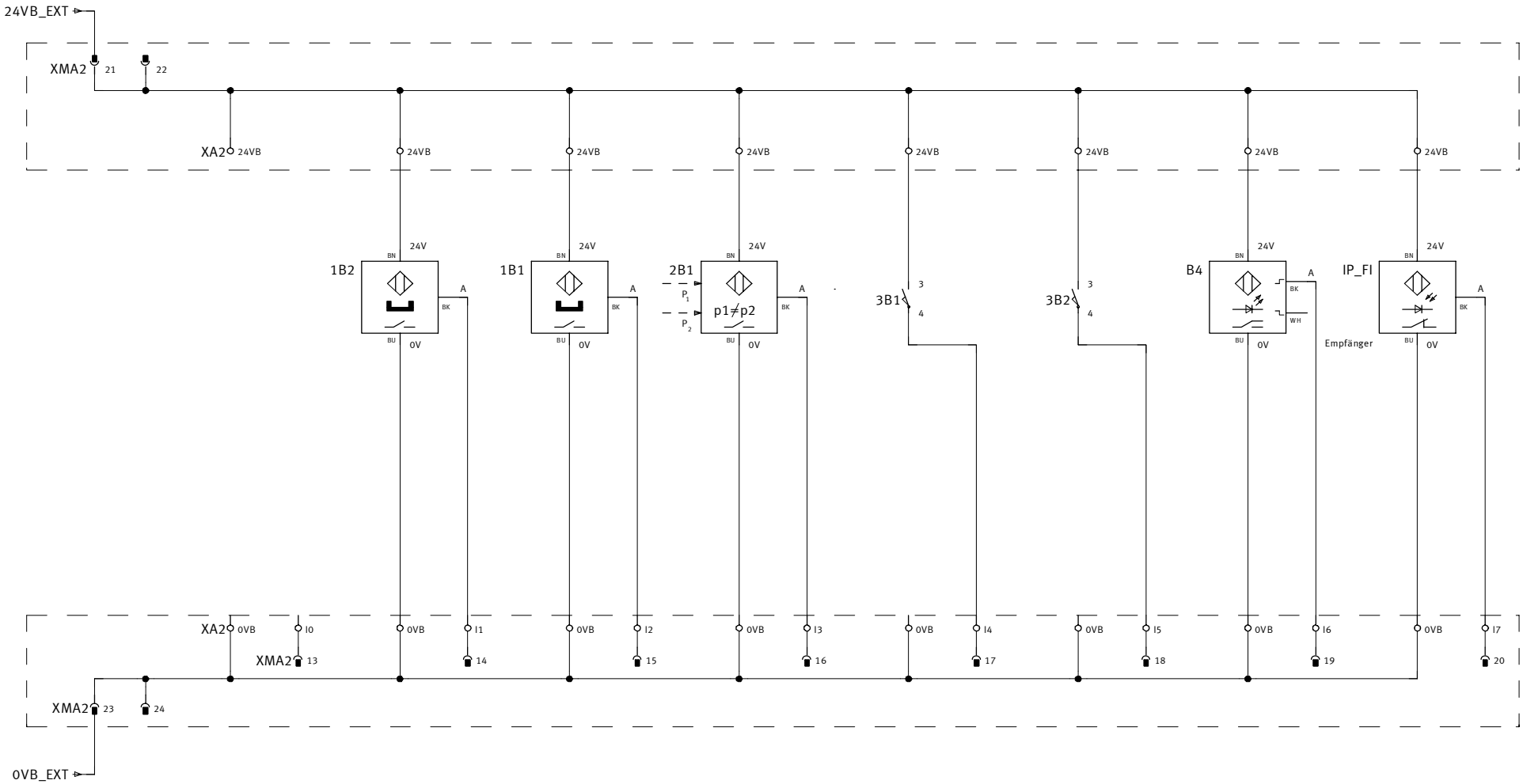

Spannung-versorgung	Ausschiebezylinder ausgefahren	Ausschiebezylinder eingefahren	Werkstück angesaugt	Schwenkzylinder in Position Magazin	Schwenkzylinder in Position Folgestation	Magazin leer	Folgestation frei
Power supply	Ejecting cylinder extended	Ejecting cylinder retracted	Workpiece gripped	Swivel drive in magazine position	Swivel drive in downstream station pos.	Magazine empty	Downstream station free

Date	05.04.06	Festo Didactic GmbH & Co. KG Rechbergstraße 3 D-73770 Denkendorf	FESTO	Station Eingänge Station inputs	MPS-C
Konstr.	MBEL				DPJ STATION VN
Certif.					
Drw-No	195780 el.	R.: FDMR02E F.: R:\EPLAN4\P\FESTO_MPS\STATION\01_VE_DI.P			

Verteilen/Distributing

= Pg. 4

+ last: 5

Diese Zeichnung ist Eigentum der Festo Didactic GmbH & Co. KG

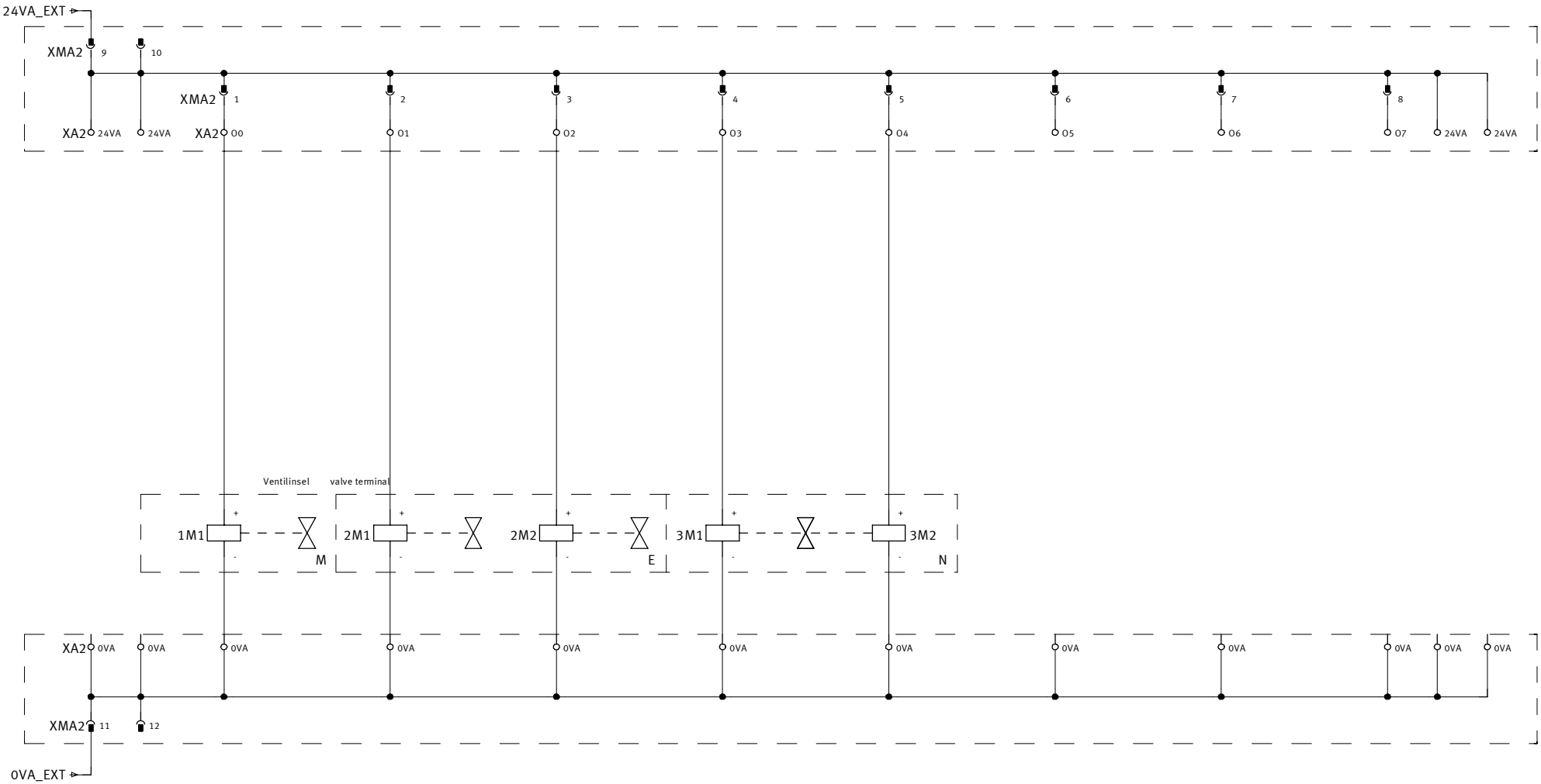

Spannung-versorgung	Ausschiebezylinder Werkstück ausschieben	Vakuum ein	Abwurfimpuls ein	Schwenkzylinder zu Magazin	Schwenkzylinder zu Folgestation
Power supply	Ejecting cylinder push out workpiece	Vacuum on	Ejection impulse on	Swivel drive to magazine	Swivel drive to downstream station

Date	05.04.06	Festo Didactic GmbH & Co. KG Rechbergstraße 3 D-73770 Denkendorf	FESTO	Station Ausgänge Station outputs	MPS-C
Konstr.	MBEL				DPJ VN STATION
Certif.					
Drw-No	195780 el.	R.: FDMR02E F.: R:\EPLAN4\P\FESTO_MPS\STATION\01_VE_DI.P			

Verteilen/Distributing

= Pg. 5

+ last: 5

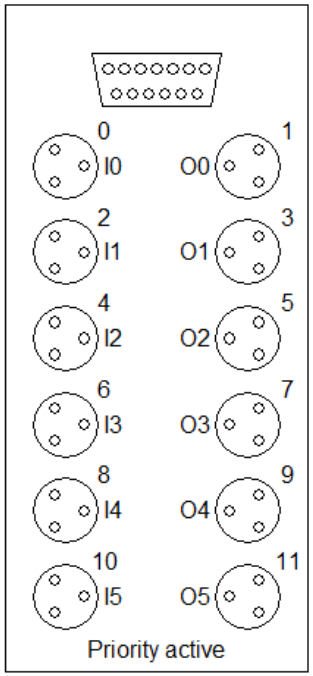
0
I0
1
O0
2
I1
3
O1
4
I2
5
O2
6
I3
7
O3
8
I4
9
O4
10
I5
11
O5
Priority active

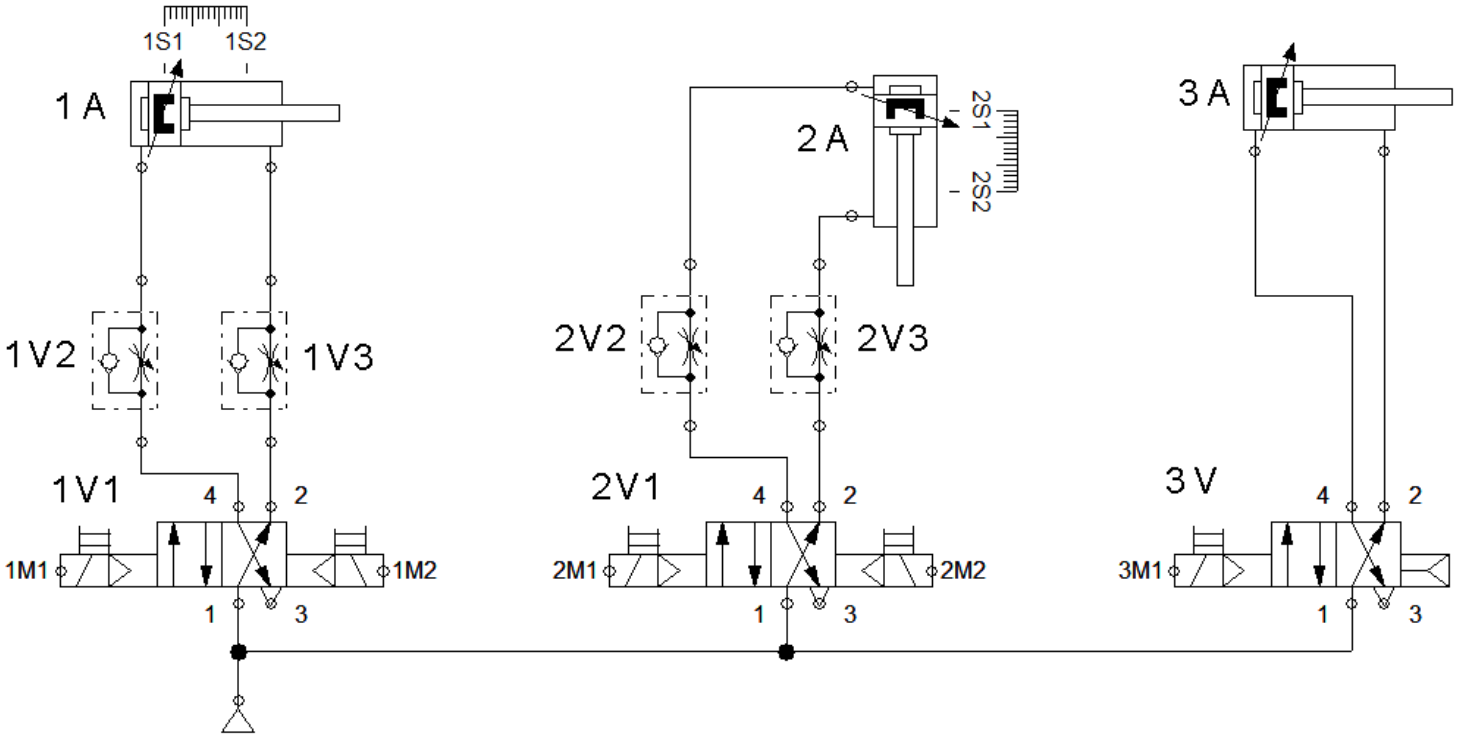
1S1
1S2
1 A
1V2
1V3
1V1
4
2
1M1
1M2
1
3
2 A
2S1
2S2
2V2
2V3
2V1
4
2
2M1
2M2
1
3
3 A
3 V
4
2
3M1
1
3

Connection to PC

The connection between the PC and the EasyPortMini process interface is established via the USB interface. The USB drivers required can be found in the 'Drivers' folder on the Fluidsim MecLab CD. These drivers generate a virtual COM interface on the PC.

The COM port number can be found on your PC under 'Settings/Control Panel/System/ Hardware/Device Manager/Ports USB Serial Port COM x'. Only one module can be connected to the PC at any given time.

Display

A two-colour LED (green/red) signals the different states of the module:

- Green LED
  - Flashing 1 Hz: Status after being switched on, module not yet communicating
  - Intermittent flashing: Module addressed: The address is displayed at two-second intervals by a number of short LED pauses.
- Red LED
  If a short circuit is detected at one of the outputs, the red LED lights up. The EasyPortMini outputs are then pulsed until the short circuit is eliminated. This LED also lights up for a short time when the module is switched on. It is extinguished during the power-on test before the output drivers are activated.

FESTO Pin Assignment 377917
for cable 177673, 177674 and for socket 177675

Insert the cable through the conduit thread connector.
Fit the D-sub plug with socket contacts (crimp) according to the pin assignment.
Fasten the D-sub plug with tapping screws.
Please note the groove for orientation !
Glue in the sealing.

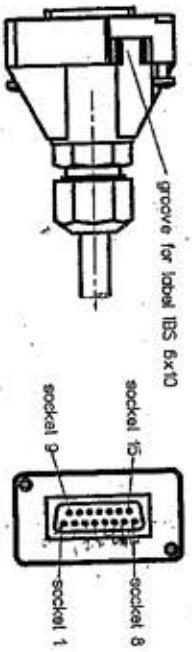

Socket no.	Core colour
1	white
2	brown
3	green
4	yellow
5	grey
6	pink
7	blue
8	red
9	black
10	violet
11	grey-pink
12	red-blue
13	white-green
14	brown-green
15	white-yellow

FESTO AG & Co • Postfach • D-73726 Esslingen • Tel.: (0711)-347-0 • FAX (0711)-347-2155

Anschlüsse Ports

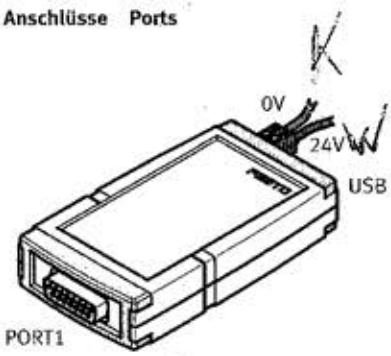

Stromversorgung

Die 24 V DC Stromversorgung für EasyPortMini muss extern über einen 2pol Schraubklemmstecker, der an der Stirnseite des Moduls angebracht ist, zugeführt werden.

Datenschnittstelle

USB Anschluss über eine 5polige Mini USB Buchse

Der Anschluss am USB Port des PCs bzw. eines Hubs erfolgt über das mitgelieferte USB A/MiniB Kabel (Bestell-Nr. 549838).

PORT1 Anschluss D-Submin 15pol. Buchse
PORT1 – Sub-D min connection, 15-pin

Digital PORT 1	PIN	
INPUT 0	1	
OUTPUT 0	2	
INPUT 1	3	
OUTPUT 1	4	
INPUT 2	5	
OUTPUT 2	6	
INPUT 3	7	
OUTPUT 3	8	
INPUT 4	9	
OUTPUT 4	10	
INPUT 5	11	
OUTPUT 5	12	
24V DC	13	
0V DC	14/15	

© Festo Didactic GmbH & Co. KG, 729870 06/2008

Diese Zeichnung ist Eigentum der Festo Didactic GmbH & Co. KG

Schaltungsunterlagen / Circuit diagrams

System MPS -C ®

Bedienpult

Control console

Date	05.04.06	Festo Didactic GmbH & Co. KG Rechbergstraße 3 D-73770 Denkendorf	FESTO	Titelblatt Title page	MPS-C
Konstr.	MBEL				DPJ VN
Certif.					
Drw-No		R.: FDMR02E F.: R:\EPLAN4\P\FESTO_MPS\BEDIENEN\PULT.P			

Bedienpult/Control console	
=	Pg. 1
+	last: 6

Inhaltsverzeichnis / Index page

Anlage / Station	Seite / Page	Seitenbenennung	Page description	Datum / Date	Bearbeiter	X
	1	Titelblatt	Title page	05.04.06	MBEL	
	2	Inhaltsverzeichnis	Index page	05.04.06	MBL	
	3	Aufbauplan	Layout	05.04.06	MBEL	
	4	Eingänge	Inputs	05.04.06	MBEL	
	5	Ausgänge	Outputs	05.04.06	MBEL	
	6	Weitere Steckverbinder	Additional connectors	05.04.06	MBEL	

Diese Zeichnung ist Eigentum der Festo Didactic GmbH & Co. KG

Diese Zeichnung ist Eigentum der Festo Didactic GmbH & Co. KG

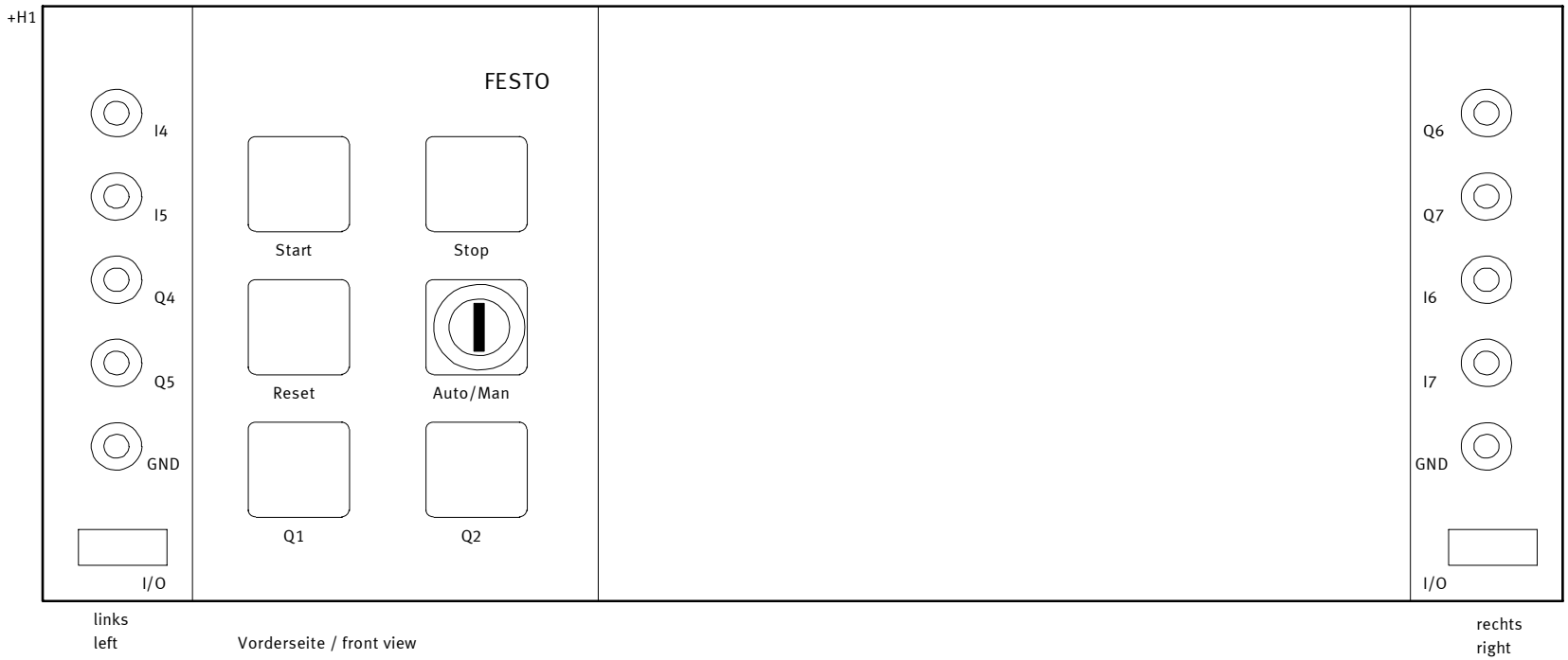

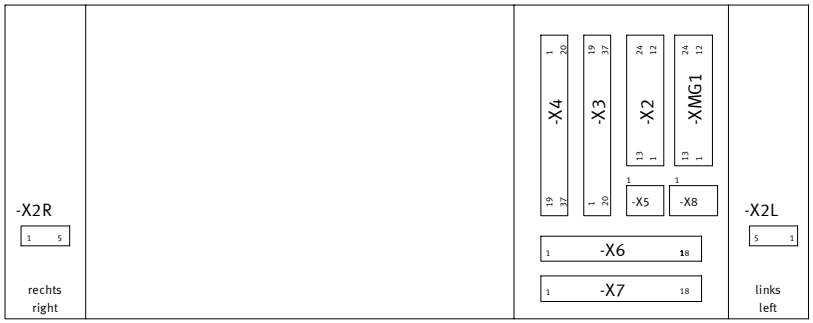

Rückseite / rear view

-XMG1=Syslink Bedienpult / Control console

Date	05.04.06	Festo Didactic GmbH & Co. KG Rechbergstraße 3 D-73770 Denkendorf	FESTO	Aufbauplan Layout	MPS-C
Konstr.	MBEL				DPJ VN
Certif.					
Drw-No		R.: FDMR02E F.: R:\EPLAN4\P\FESTO_MPS\BEDIENEN\PULT.P			

Bedienpult/Control console	
=	Pg. 3
+	last: 6

Diese Zeichnung ist Eigentum der Festo Didactic GmbH & Co. KG

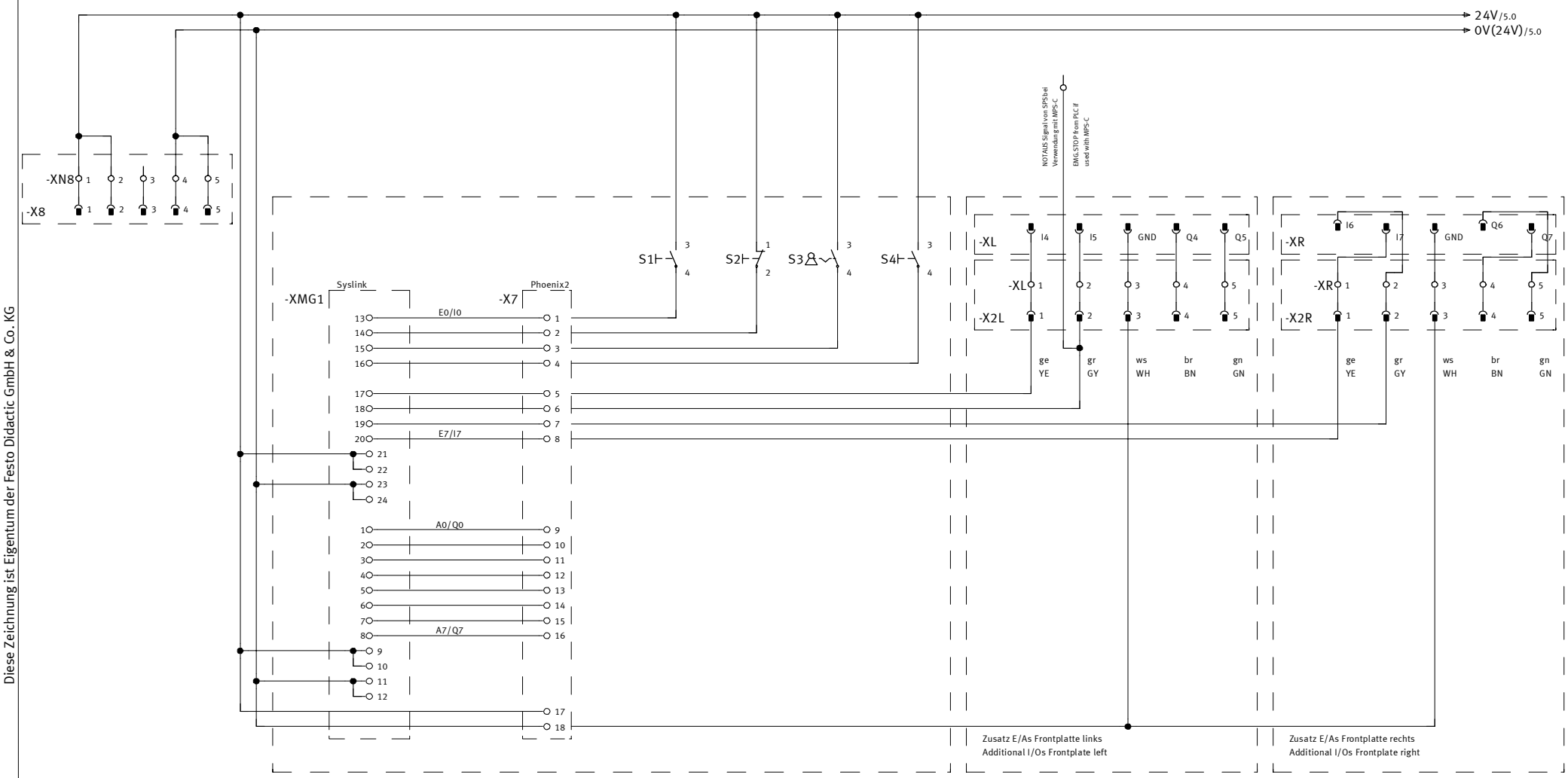

Spannungsversorgung	Taster START	Taster STOP (Öffner)	Schalter AUTO/MAN	Taster RICHTEN	Externer Eingang E4	NOTAUS extern E5	Externer Eingang E6	Externer Eingang E7
Power supply	START button	STOP button (norm. closed)	Key switch AUTO/MAN	RESET button	External input I4	EMG STOP ext. I5	External input I6	External input I7

« 3
5 »

Date	05.04.06	Festo Didactic GmbH & Co. KG Rechbergstraße 3 D-73770 Denkendorf	FESTO
Konstr.	MBEL		
Certif.			
Drw-No		R.: FDMR02E F.: R:\EPLAN4\P\FESTO_MPS\BEDIENEN\PULT.P	

Eingänge
Inputs

MPS-C
DPJ VN

Bedienpult/Control console
=
+

Diese Zeichnung ist Eigentum der Festo Didactic GmbH & Co. KG

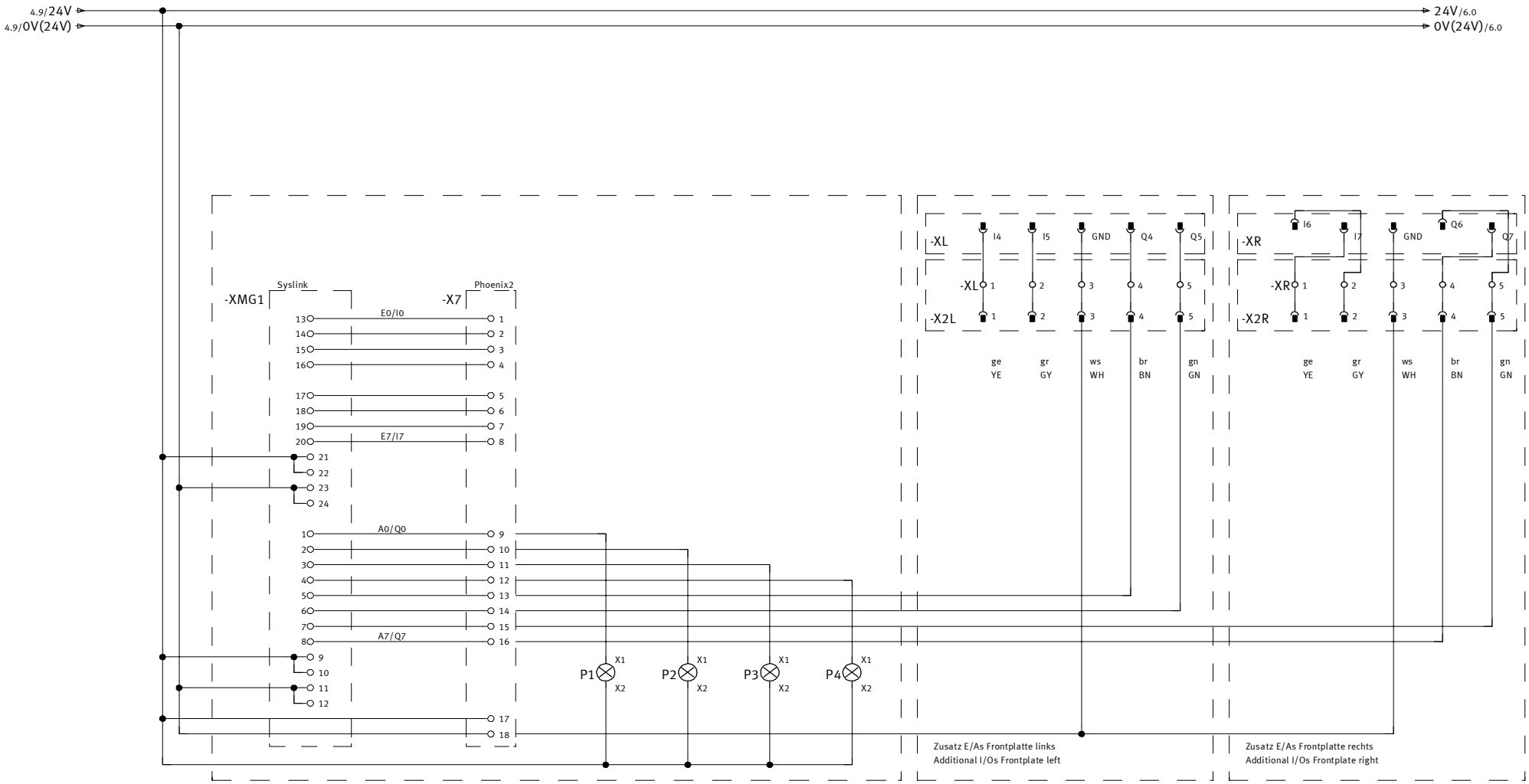

Leuchtmelder START	Leuchtm. RESET	Leuchtm. Sonderf. Q1	Leuchtm. Sonderf. Q2
START indicator light	RESET ind. light	Q1 special ind.light	Q2 special ind.light

Externer Ausgang A4	Externer Ausgang A5
External output Q4	External output Q5

Externer Ausgang A6	Externer Ausgang A7
External output Q6	External output Q7

Date	05.04.06	Festo Didactic GmbH & Co. KG Rechbergstraße 3 D-73770 Denkendorf	FESTO
Konstr.	MBEL		
Certif.			
Drw-No		R.: FDMR02E F.: R:\EPLAN4\P\FESTO_MPS\BEDIENEN\PULT.P	

Ausgänge
Outputs

MPS-C
DPJ VN

Bedienpult/Control console
=
+

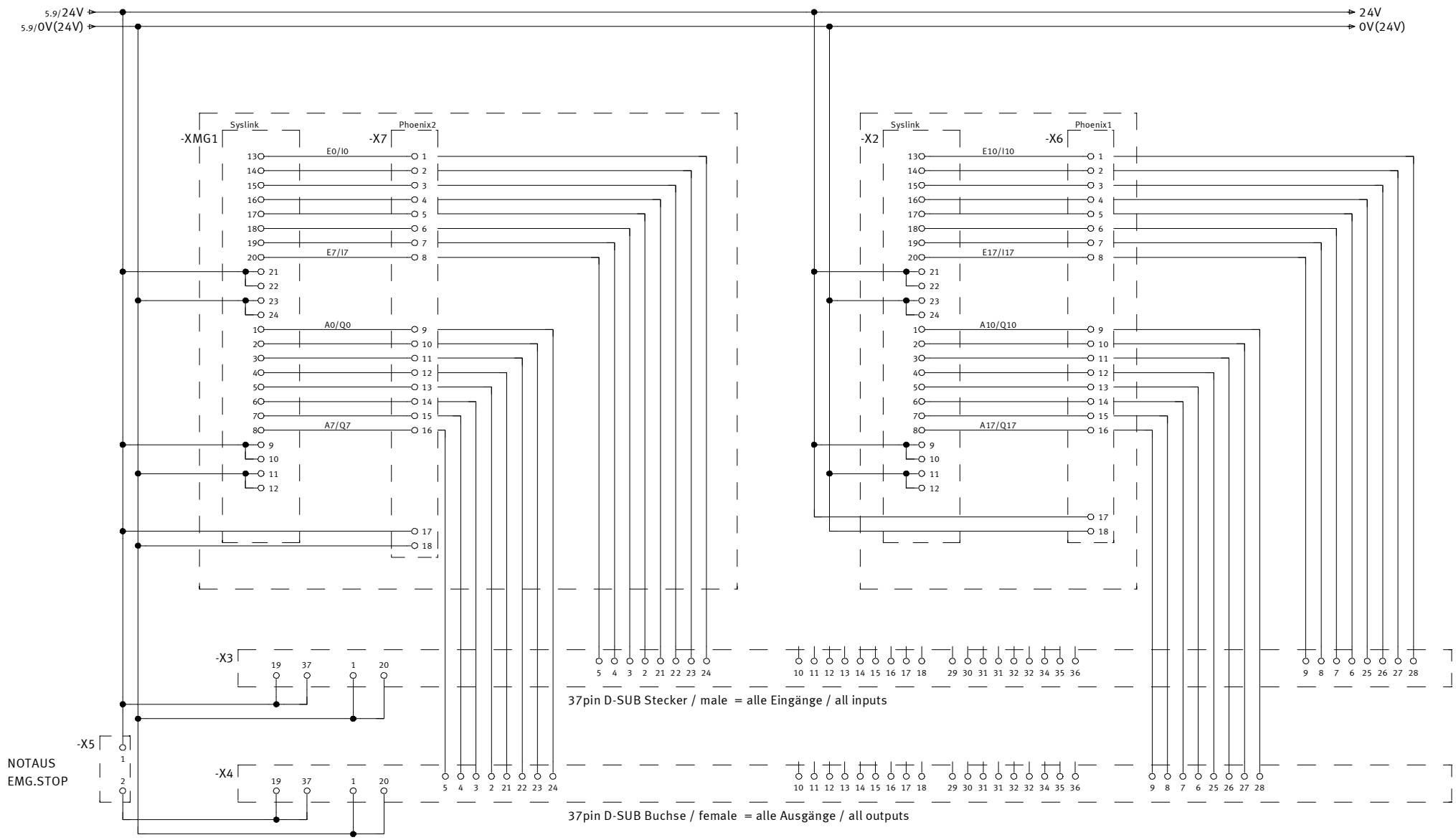

Diese Zeichnung ist Eigentum der Festo Didactic GmbH & Co. KG

Date	05.04.06	Festo Didactic GmbH & Co. KG Rechbergstraße 3 D-73770 Denkendorf	FESTO	Weitere Steckverbinder Additional connectors	MPS-C
Konstr.	MBEL				DPJ VN
Certif.					=
Drw-No		R.: FDMR02E F.: R:\EPLAN4\P\FESTO_MPS\BEDIENEN\PULT.P			+

Bedienpult/Control console

Pg. 6

last: 6

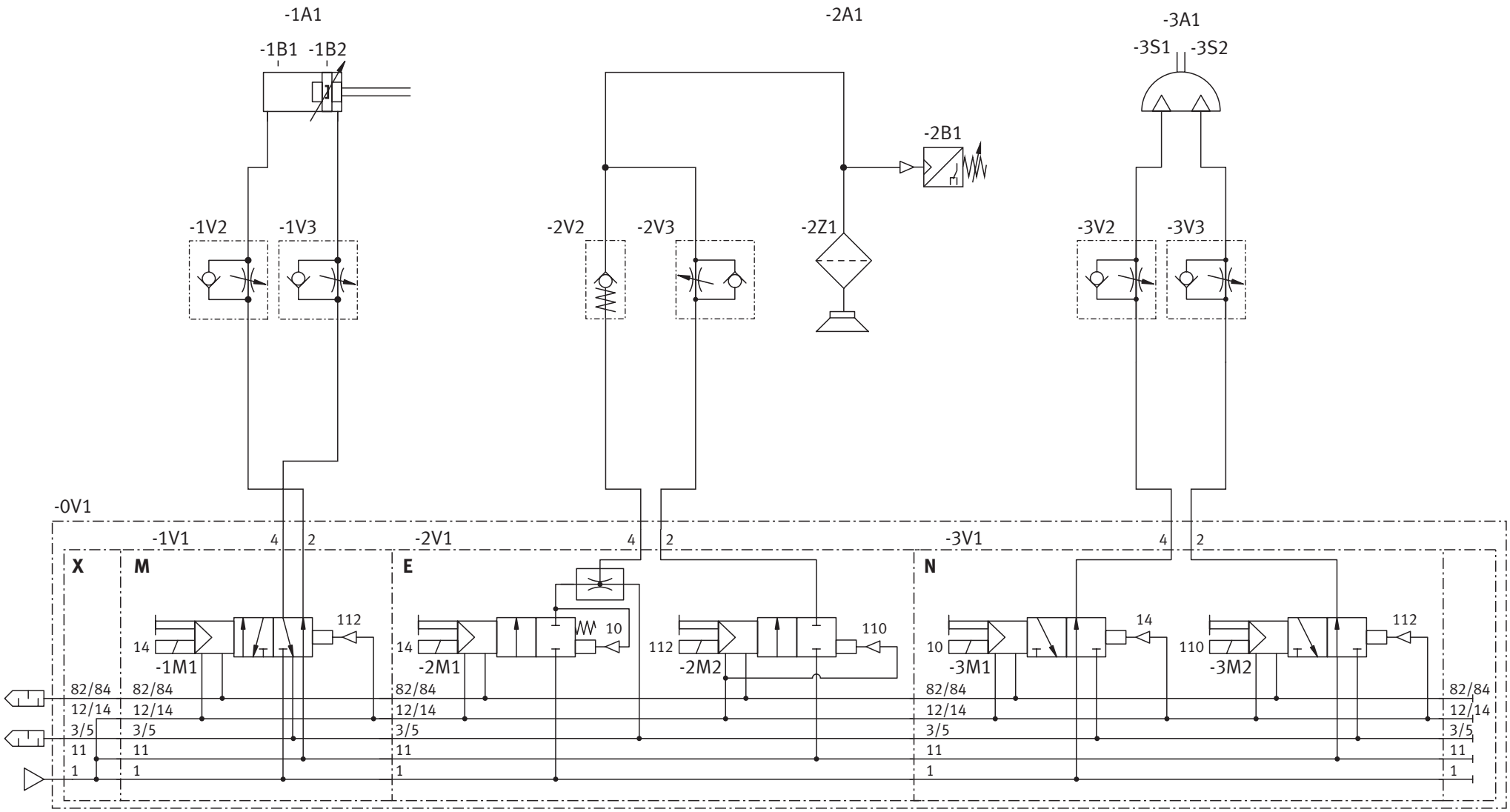

AUSSCHIEBEZYLINDER	VAKUUM GREIFER	SCHWENKZYLINDER	
		-3S1: POSITION MAGAZIN	-3S2: POSITION FOLGESTATION
EJECTING CYLINDER	VACUUM SUCTION CUP	SWIVEL DRIVE	
		-3S1: POSITION MAGAZINE	-3S2: POSITION DOWNSTR. STATION

				Datum	11.04.05		FESTO Festo Didactic GmbH & Co. Rechbergstr. 3 / D-73770 Denkendorf	MPS-C	Station Verteilen	Pneumatik	
				Bearb.	MBEL				Distributing Station	Pneumatic	
				Gepr.	---						BLATT
	Aenderung	Datum	Name	Norm	DIN5	Urspr keiner	Ers.f. —	Ers.d. —			FOLGE

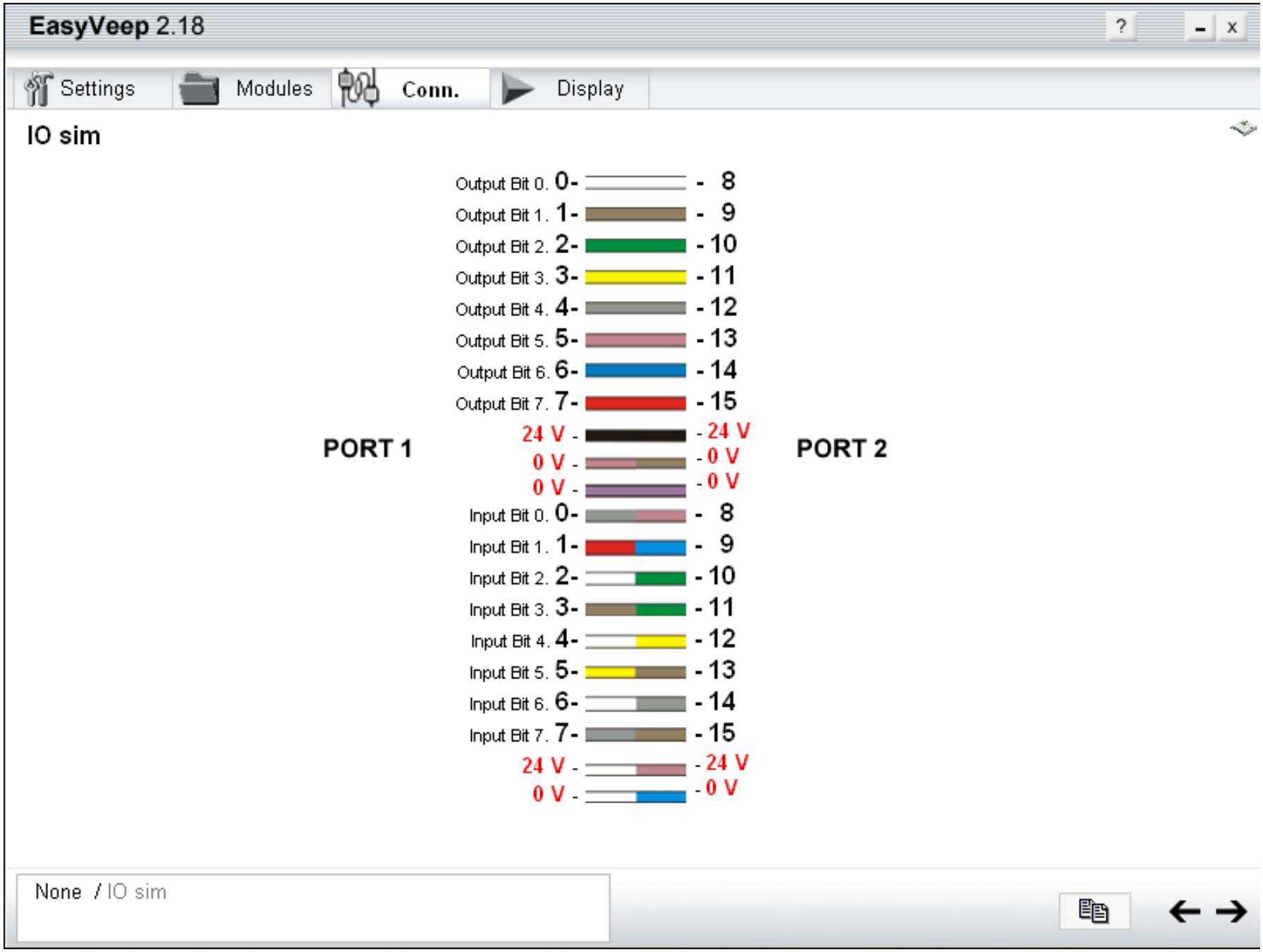
EasyVeep 2.18
Settings
Modules
Conn.
Display
IO sim
PORT 1
Output Bit 0. 0-
Output Bit 1. 1-
Output Bit 2. 2-
Output Bit 3. 3-
Output Bit 4. 4-
Output Bit 5. 5-
Output Bit 6. 6-
Output Bit 7. 7-
24 V -
0 V -
0 V -
Input Bit 0. 0-
Input Bit 1. 1-
Input Bit 2. 2-
Input Bit 3. 3-
Input Bit 4. 4-
Input Bit 5. 5-
Input Bit 6. 6-
Input Bit 7. 7-
24 V -
0 V -
PORT 2
- 8
- 9
- 10
- 11
- 12
- 13
- 14
- 15
- 24 V
- 0 V
- 0 V
- 8
- 9
- 10
- 11
- 12
- 13
- 14
- 15
- 24 V
- 0 V
None / IO sim

Skills 2015 Oral Assessment

Note: ***Items in italics are judge's instructions and should not be read to the contestant. Items in normal type are to be read aloud. Give students both drawings. They may refer to either one, the difference being the electrical symbols are either ISO or JIC / ANSI formats.***

Scoring Instructions: Each answer has a score value in parentheses. If the contestant answers the question correctly, then he/she earns the point value. Credit is allowed if the contestant has the proper thoughts but does not use the exact wording. Contestants may write on the diagrams but they are NOT allowed to keep them!

Simply mark off the point values as you go along. After the exam is finished, please total up points BY PAGE and insert in the total space at the bottom of each sheet. Enter the FINAL TOTAL OF ALL PAGES HERE >>> _____

In case of multiple questions – questions answered correctly but out of order deserve full credit.

Step 1: Introduce yourself and explain what the purpose is.

Good morning / afternoon. My name is_____ And I want to welcome you to the oral part of the competition. The purpose of this exercise is to serve as a review of some symbols for devices commonly used in electro-pneumatic systems and how they interact to accomplish a task. I will ask you some questions or make some statements. What I would like you to do is answer the questions and/or discuss the statements made. There is a 20 minute time limit. You may elect to skip a question. If time permits, you may go back to the skipped questions with no penalty.

Team # _____Contestant # _____

<u>Diagrams # 1 & 2</u>

1. **Find and identify components # 1.0, 2.0 3.0.**

Component # 1.0 is a double acting cylinder ( ) with adjustable cushioning ( ) and a magnet on the piston to activate a proximity switch ( )

Component # 2.0 is a rotary actuator "pneumatic motor" ( )

Component # 3.0 Is a single acting cylinder ( ) with magnet on piston to actuate a proximity switch ( )

2. **Find and identify components # 1.1, 2.1, 3.1**

Component # 1.1 is a 5-port/2-position valve ( ) with dual solenoids ( ) & manual override ( )

Component # 2.1 is a 3-port/2-position, normally non-passing ( ) valve ( ) with a single solenoid ( ) manual override ( ) and spring return ( ) and body exhaust

Component # 3.1 is a 3-port/2-position, normally non-passing ( ) valve ( ) air piloted ( ) with an air spring return ( ) threaded exhaust ports ( )

3. **Find and identify component # 0.2 – What is its purpose ?**

Component # 0.2 is a soft-start valve ( ). Its purpose is to slowly pressurize the system to prevent rapid movement of the components to their last command position(s) before shut-down( )

4. **What happens when the "master on/off switch" is activated ?**

The "master on/off switch" turns power on to the system ( ) the light illuminates( ) and valve 0.3 shifts( ) because the E-stop switch is normally closed( )

5. **What type switch is "switch # 1" and what happens when it is pressed ?**

Switch # 1 is a normally open ( ) detented switch ( ) that activates solenoid Y-1 ( ) which shifts valve # 0.1 ( ) and allows air to start flowing into the system( )

6. **Press the "start button – what happens ?**

Solenoid Y-2 is activated and shifts valve 1.1 ( ) allowing cylinder 1.0 to extend ( )

7. **What is component # 1.02 what is its purpose & is there a name we call this speed control technique ?**

1.02 is a one-way flow control valve ( ). Its purpose is to regulate the speed or the cylinder in one direction only ( ). The technique shown is called "metering out" ( ).

8. **What happens when cylinder 1.0 extends ?**

Cylinder 1.0 extends and hits limit switch 2.1 ( ). Limit switch 2.1 activates solenoid y-7 ( ) allowing valve 2.1 to shift ( ). When 2.1 shifts the drill motor 2.0 starts spinning ( ) and air is sent ( ) to 3.1 to start the drill press ( )

9. **What happens when valve 2.1 shifts ?**

Valve 2.1 allows air flow to component 2.0 "drill motor" ( ) and activates valve 3.1 ( )

10. **What is component # 3.02 and what is its purpose ?**

Component 3.03 is a throttling valve or adjustable flow restrictor ( ). Its purpose if to slow the airflow to the downstream components ( ).

11. **What happens when valve # 3.1 shifts ?**

Valve 3.1 allows airflow to cylinder 3.0 ( ).

12. **What is component 3.04 and what is its purpose and configuration ?**

Component 3.04 is a one-way flow control valve ( ) it is configured to "meter in" ( ) to slowly extend the cylinder ( )

13. **What happens when cylinder 3.0 extends fully ?**

Cylinder 3.0 extends and actuates limit switch 3.1 ( ). Limit switch 3.1 activates solenoid Y-32 ( ) and cylinder 1.0 returns home ( ). As cylinder 1.0 returns, limit switch 2.1 de-activates ( ) and valve 2.1 shifts, stopping airflow to the motor and drill press ( ).

14. **What happens when the "E-STOP" is activated ?**

Solenoid Y-16 is de-activated ( ) and valve 0.3 shifts ( ). Air pressure is cut off to valves 1.1, 2.1 and 3.1 ( ). Air is exhausted out the quick exhaust valve # 0.4 ( ). Air pressure shifts the OR gate (shuttle valve) ( ) and allows cylinder 1.0 to retract.

Diagrams # 3 & 4

1. **What is component 1.0 ?**

Component 1.0 is a vacuum generator ( )

2. **What happens when switch # 1 is pressed ?**

Switch 1 actuates relay R-1 ( ). All points in that relay change state, one closes ( ) and allows electricity to flow to R-1 ( ) and to solenoid Y-1 ( )

3. **Is there a special name we give the circuit on the first two rungs of the ISO diagram?**

This is called a "Latch or Latching Circuit" ( )

4. **Is this a dominant-on or dominant-off latch ?**

This is a "dominant-Off" latch ( )

5. **What happens when Y-1 is actuated ?**

Y-1 actuates valve 1.1 ( ) which opens and allows air to flow to valves 1.2 ( ) & 1.3 ( )

6. **If you press switch # 3 what do you expect to happen ?**

Pressing switch 3 activates solenoid Y-11 ( ) and valve 1.2 opens ( )

7. **What is component 1.02 ? What does**

Component 1.02 is a pressure regulator ( )

8. **What does the regulator control (1.02) – pressure or volume of air flow ?**

Component 1.02 controls pressure ( )

9. **If, after contacting an object and creating a vacuum – What would happen if you released switch # 3 ?**

Vacuum would continue ( ), check valve 1.03 will maintain the vacuum ( )

10. What is the purpose of switch # 4 ?

Switch 4 activates solenoid Y-12 ( ) this will shift valve 1.3 allowing airflow into the vacuum line ( ) this airflow will overcome the vacuum and release the part ( )

11. What is component 1.04 and what is its purpose ?

Component 1.04 is a filter ( ) its purpose is to prevent solid particles from entering the vacuum generator ( )

12. Why are two gages included in this circuit ?

Gages before and after the filter will indicate the differential vacuum before and after the filter ( ) This will tell if the filter is clogged ( )

13. If in its original configuration, this circuit used a 4 inch suction cup – May we replace the 4 inch cup with two – 2 inch cups and expect the same results ?

NO ( ) A 4 inch cup has a surface area of 12.56 sqin and a 2 inch cup has a surface area of 3.16 sqin. Two 2 inch cups would only provide 6.32 inches of surface area ( )

<u>Diagram # 5</u>

1. What type circuits are these ? How can you tell ?

Hydraulic ( ) The pressure symbol is solid not open ( ), the "exhaust" symbol shows "return to tank" ( )

2. What type valves are shown ?

The valves are 4 port ( ) 2 position ( ) solenoid operated ( ) spring centered ( ) with manual override ( ) valves

3. What is the difference between component 1.1 & 2.1 ?

Valve 2.1 is a proportional ( ) valve with variable output solenoids ( )

4. **Component 2.1 is definitely more expensive than component 1.1. What advantage(s) are gained by using this valve ?**

Valve 1.1 allows on/off operation only ( ) valve 2.1 allows infinitely adjustable flow ( ) and therefore speed to the motor ( ).

<u>Diagram # 6</u>

1. **What are we attempting to do in these circuits ?**

Control the cylinder's extension speed ( ).

2. **Which is the preferred design & why**

The right circuit is the preferred design ( ).

Because of the differential area (piston side vs annular side) a very large, dangerous over-pressurization is likely ( ).

<< END >>

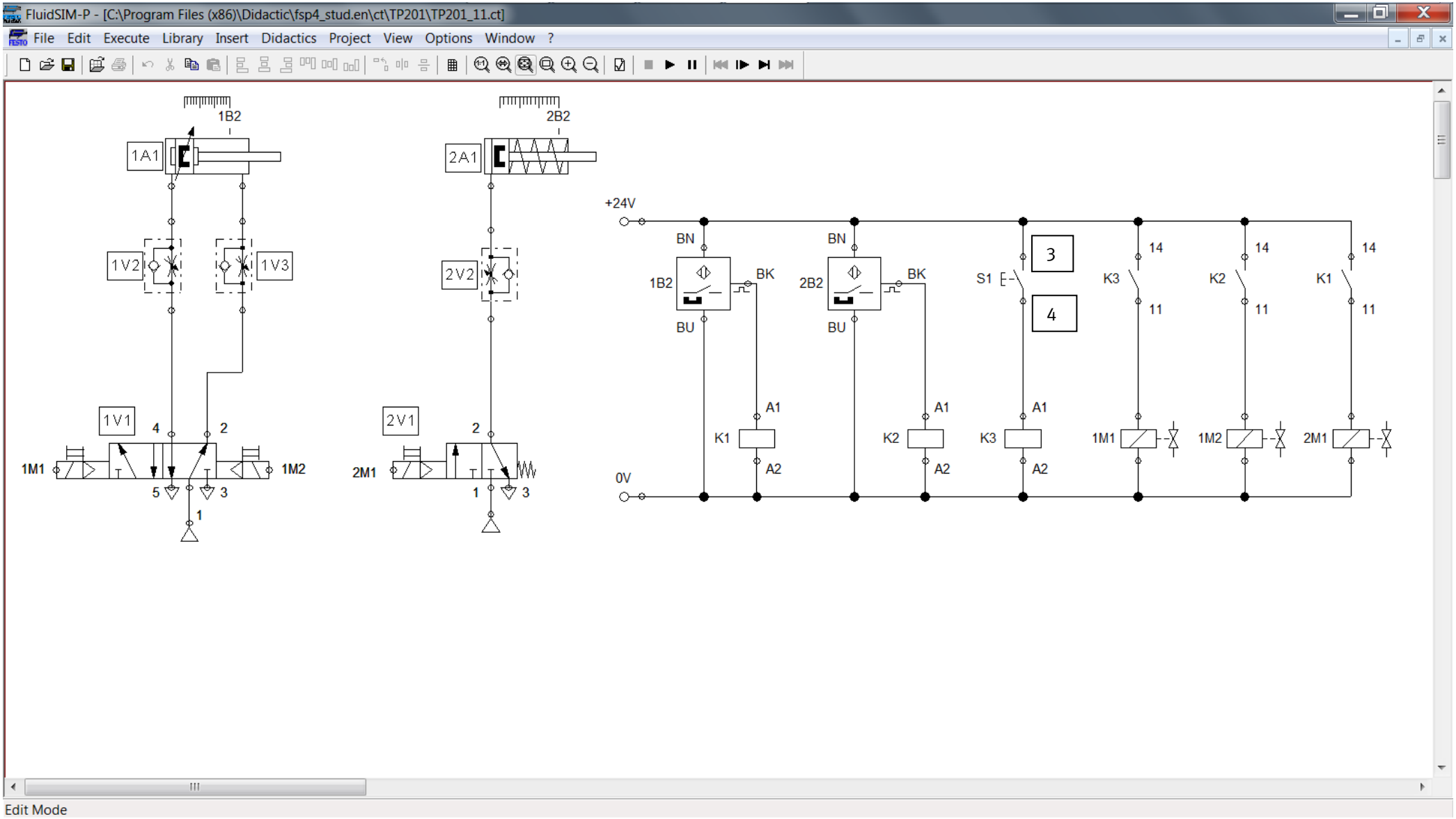
FluidSIM-P - [C:\Program Files (x86)\Didactic\fsp4_stud.en\ct\TP201\TP201_11.ct]
File Edit Execute Library Insert Didactics Project View Options Window ?
1B2
1A1
1V2
1V3
1V1
4
2
1M1
1M2
5
3
1
2B2
2A1
2V2
2V1
2M1
+24V
0V
BN
BU
BK
A1
A2
K1
K2
K3
S1
3
4
14
11
1M1
1M2
2M1
Edit Mode

Instructions:

Here is the schematic for a circuit .

You need to identify the proper components based on the schematic.

Connect them to the profile plate using the nuts and bolts provided. Make sure you place the components so they do not collide while moving.

All components are to be fully within the confines of the work surface, even when in motion.

All electrical wiring is to be run through the conduit and back to the terminal strip. Terminal strips are to get 24V and 0V from power supply. Do NOT cut any wires or cables, except for the blue hookup wire we have provided.

Compressed air lines are not routed through the conduit. Air lines must not be touched by moving parts.

Sequence of Operation: Pressing pushbutton causes cylinder 1A1 to extend. When it is fully extended, cylinder 2A1 is to extend. When 2A1 is fully extended, both cylinders are to retract.

All cylinder motion is to be smooth and under control. Speeed adjustment is made via valves 1V2, 1V3 and 2V2.

You are ENCOURAGED to write on the schematic for planning purposes and to mark off completed connections.

Team Number: _____

Time Ended: _____	Operation correct?	_____
Time Started: _____	Pneumatic?	_____
	Electrical?	_____
	Relays?	_____
Total Time: _____	Cylinder motion controlled?	_____

Lab-Volt®

Mechanical Training System

Belt Drives 1

Lab-Volt®
1-800-Lab-Volt
www.labvolt.com

36891-70
3 0 3 6 8 9 1 7 0 0 7 0 9

Work Orders - Instructor

Mechanical Training System

Belt Drives 1

Work Orders – Instructor

36891-70

Lab-Volt®

MECHANICAL TRAINING SYSTEM

BELT DRIVES 1

by
the Staff
of
Lab-Volt Ltd.

Copyright © 2005 Lab-Volt Ltd.

All rights reserved. No part of this publication may be reproduced, in any form or by any means, without the prior written permission of Lab-Volt Ltd.

Legal Deposit — Fourth Trimester 2005

ISBN 978-2-89289-828-6

FIRST EDITION, NOVEMBER 2005

Printed in Canada
September 2007

To the Instructor

- Before a student begins a work order, ensure that the equipment is in good condition and does not represent any risk when used.

- When a student has to complete a setup that is partially already mounted, ensure that the setup corresponds to the job description.

- This guide provides you with the answers to calculations, and measurements. Your evaluation, however, must relate to the quality of the accomplished work. Make sure that the objectives listed in the Work Assessment Table are met.

- When the jobs are performed in teams, ensure that each student has and installs a padlock when performing the lockout/tagout procedure.

- Make sure that the students understand the objectives of the job to do. They should have read the appropriate pages in their textbook.

- Contact the National Center for Construction Education and Research (NCCER), at *www.nccer.org*, to obtain the requirements relative to the NCCER accreditation of this course.

Table of contents

Work Order 1 Introduction to Belt Drives 1

Work Order 2 Sheave and Belt Installation 1

Work Order 3 Sheave Alignment 1

Work Order 4 Belt Tensioning 2

Work Order 5 Speed, Torque, and Pulley Ratios 2

Work Order 6 Sheave and Belt Maintenance 3

Work Assessment Table 4

WORK ORDER 1 INTRODUCTION TO BELT DRIVES

ANSWERS TO PROCEDURE STEP QUESTIONS

☐ 2. Gauge: V-belt and sheave gauge.

☐ 3. Belt Type: A, which has the same dimensions as a 4L V-belt.

☐ 4. Height: approximately 0.313 in.

Width measured on the outer face: approximately 0.5 in.

☐ 5.

SHEAVE O.D. in.	SHEAVE D. in.
3.75	3
4.75	4
5.75	5

WORK ORDER 2 SHEAVE AND BELT INSTALLATION

ANSWERS TO PROCEDURE STEP QUESTIONS

☐ 4. The tension adjustment screw is used to adjust the belt tension when all the screws are tightened.

WORK ORDER 3 SHEAVE ALIGNMENT

ANSWERS TO PROCEDURE STEP QUESTIONS

☐ 3. The three primary types of sheave misalignment are horizontal angular, vertical angular, and parallel.

☐ 4. Instrument: combination square with level

☐ 5. Misalignment: horizontal angular

WORK ORDER 4 BELT TENSIONING

ANSWERS TO PROCEDURE STEP QUESTIONS

☐ 3. Under-tensioning a belt can cause slippage of the belt in the sheaves.

☐ 4. Varying the tension of a belt on the universal base can be performed by moving the motor or pillow block bearings, by adding another an idler, or by screwing the tension adjustment screw located on the motor mounting base.

WORK ORDER 5 SPEED, TORQUE, AND PULLEY RATIOS

ANSWERS TO PROCEDURE STEP QUESTIONS

☐ 3. Pitch diameter ratio: 1.3

☐ 4. Driven sheave speed: 1294 r/min

☐ 7. Driving sheave speed (n_1): approximately 1785 r/min

☐ 8. Driven sheave speed (n_2): approximately 2230 r/min

☐ 12. Speed ratio: approximately 0.8

☐ 15. Pitch diameter ratio (D_2/D_1): 0.8

☐ 17. Driving sheave speed (n_1): approximately 1785 r/min

Driven sheave speed (n_2): approximately 2230 r/min

☐ 20. Speed ratio: approximately 0.8

WORK ORDER 6 SHEAVE AND BELT MAINTENANCE

ANSWERS TO PROCEDURE STEP QUESTIONS

☐ 1.

SYMPTOMS	PROBABLE CAUSES				
	Misalignment	Worn sheave	Belt slip	Rubbing of belt against guard	Shock load
Premature wear	✓	✓	✓	✓	
Excessive noise	✓	✓	✓	✓	
High temperature			✓	✓	
Broken belt					✓

WORK ASSESSMENT TABLE

The following table is a guide to evaluate the work done by the student. It covers the key elements that should be verified for each work order.

ELEMENTS TO VERIFY	WORK ORDER				
	1	2	3	4	5
The students have performed the Safety Procedures listed in Appendix D.	•	•	•	•	•
The Lockout/Tagout procedure is properly done.		•	•	•	•
A key is installed in the sheave keyseats.		•	•	•	•
The tension adjustment screw is oriented as shown in Figure 2-1.		•	•	•	•
There are four points of contact between the sheaves and the straightedge.			•	•	•
All screws and setscrews are tightened.			•	•	•
The deflection force on the belt is within the range determined.				•	•
A piece of reflective tape is present on both sheaves.					•
The output voltage selector is set to FIXED.					•
The safety panels are installed.					•

Lab-Volt®

Mechanical Training System

Gear Drives 1

Work Orders - Instructor

Lab-Volt®
1-800-Lab-Volt
www.labvolt.com

36893-70
3 0 3 6 8 9 3 7 0 0 7 0 9 $

Mechanical Training System

Gear Drives 1

Work Orders – Instructor

36893-70

Lab-Volt®

MECHANICAL TRAINING SYSTEM

GEAR DRIVES 1

by
the Staff
of
Lab-Volt Ltd.

Copyright © 2005 Lab-Volt Ltd.

All rights reserved. No part of this publication may be reproduced, in any form or by any means, without the prior written permission of Lab-Volt Ltd.

Legal Deposit — Fourth Trimester 2005

ISBN 978-2-89289-832-3

FIRST EDITION, NOVEMBER 2005

Printed in Canada
September 2007

To the Instructor

- Before a student begins a work order, ensure that the equipment is in good condition and does not represent any risk when used.

- When a student has to complete a setup that is partially already mounted, ensure that the setup corresponds to the job description.

- This guide provides you with the answers to calculations, and measurements. Your evaluation, however, must relate to the quality of the accomplished work. Make sure that the objectives listed in the Work Assessment Table are met.

- When the jobs are performed in teams, ensure that each student has and installs a padlock when performing the lockout/tagout procedure.

- Make sure that the students understand the objectives of the job to do. They should have read the appropriate pages in their textbook.

- Contact the National Center for Construction Education and Research (NCCER), at *www.nccer.org*, to obtain the requirements relative to the NCCER accreditation of this course.

Table of contents

Work Order 1 Introduction to Gear Drives 1

Work Order 4 Backlash Adjustment 2

Work Order 5 Speed, Torque, and Gear Ratios 2

Work Order 6 Gears Using Split Taper Bushings 3

Work Order 7 Gear Trains 3

Work Assessment Table 4

WORK ORDER 1 INTRODUCTION TO GEAR DRIVES

ANSWERS TO PROCEDURE STEP QUESTIONS

☐ 2. Spur gear: 1

☐ 3.

GEAR	OUTSIDE DIAMETER in.	PITCH DIAMETER in.
12 P - 20 teeth - 14.5°ϕ	1.833	1,667
12 P - 30 teeth - 14.5°ϕ	2.667	2,5
12 P - 40 teeth - 14.5°ϕ	3.5	3,333
16 P - 48 teeth - 20°ϕ	3.12	3
16 P - 64 teeth - 20°ϕ	4.12	4.0

☐ 4.

GEAR COMBINATION	D RATIO	O.D. RATIO	TEETH RATIO
12 P - 20 teeth - 14.5°ϕ 12 P - 30 teeth - 14.5°ϕ	1.5	1.45	1.5
16 P - 48 teeth - 20°ϕ 16 P - 64 teeth - 20°ϕ	1.33	1.32	1.33

☐ 5. Ratio: pitch diameter ratio

☐ 6.

GEAR COMBINATION	DO THE GEARS MESH CORRECTLY?	
	YES	NO
12 P - 20 teeth - 14.5°ϕ 12 P - 30 teeth - 14.5°ϕ	✓	
12 P - 20 teeth - 14.5°ϕ 16 P - 48 teeth - 20°ϕ		✓
16 P - 48 teeth - 20°ϕ 16 P - 64 teeth - 20°ϕ	✓	

☐ 7. Gears do not mesh correctly if they do not have the same pressure angle and diametral pitch.

WORK ORDER 4 BACKLASH ADJUSTMENT

ANSWERS TO PROCEDURE STEP QUESTIONS

☐ 3. Backlash is described as the amount by which the width of a tooth space exceeds the thickness of the engaged tooth on the pitch circle, or simply the play between mating teeth.

☐ 4. Excessive backlash can cause premature wear on the teeth, and is particularly detrimental on reversing mechanisms.

☐ 5. Instrument: dial indicator

☐ 7. Shaft center distance: 2.5 in.

☐ 8. Allowable backlash range: between 0.005 and 0.015 in.

☐ 9. Backlash: as measured.

WORK ORDER 5 SPEED, TORQUE, AND GEAR RATIOS

ANSWERS TO PROCEDURE STEP QUESTIONS

☐ 3. Teeth ratio: 0.5

Driven gear speed: 42 r/min

☐ 6. Driven gear turns: 2

☐ 11. Speed ratio: 0.5

WORK ORDER 6 GEARS USING SPLIT TAPER BUSHINGS

ANSWERS TO PROCEDURE STEP QUESTIONS

☐ 3. Split portion: tapered

☐ 9. Torque: 95 lb·in.

WORK ORDER 7 GEAR TRAINS

ANSWERS TO PROCEDURE STEP QUESTIONS

☐ 3. The speed of gear N_3 depends only on the speed of gear N_1 and on their teeth ratio. Gear N_2 has no influence on the speed of gear N_3.

☐ 4. The function of gear N_2 is to change the direction of rotation between the first and last gear.

☐ 5. Yes, however the gears of different diametral pitches or pressure angles cannot be assembled in series. They must be assembled in parallel.

☐ 10. Direction of rotation of the left gear as you face the universal base: counterclockwise

Direction of rotation of the right gear as you face the universal base: counterclockwise

☐ 12. Number of turns of the left gear as you face the universal base: 2.66

Number of turns of the right gear as you face the universal base: 2.66

☐ 13. Number of tuns of the last driven gear: 8

☐ 15. Number of turns of the last driven gear: 8

WORK ASSESSMENT TABLE

The following table is a guide to evaluate the work done by the student. It covers the key elements that should be verified for each work order.

ELEMENTS TO VERIFY	WORK ORDER						
	1	2	3	4	5	6	7
The students have performed the Safety Procedures listed in Appendix D.	•	•	•	•	•	•	•
The Lockout/Tagout procedure is properly done.		•	•	•	•		•
A key is installed in the gear keyseats.		•	•	•	•		•
Shims are installed under the variable speed motor.		•	•	•	•		
There are four points of contact between the gears and the straightedge.			•	•	•		•
All screws and setscrews are tightened.			•	•	•		•
The backlash is comprised between 0.005 and 0.015 in.				•	•		•
The capscrews on the split taper bushing(s) are tightened to approximately 95 lbf·in.						•	•
The output voltage selector is set to VARIABLE.					•		
The safety panels are installed.					•		

SkillsUSA
2015 Contest Projects

Medical Assisting

Click the “Print this Section” button above to automatically print the specifications for this contest. Make sure your printer is turned on before pressing the button.

Medical Assisting

SKILLSUSA NSLC 2015

VITAL SIGNS/CHARTING

TIME LIMIT: 15 MINUTES

CONTESTANT INFORMATION: V/S and the reason for visit are part of the triage for all pts. Correct technique, accurate results, and good documentation facilitate a healthy outcome for the pt. Pulse and Respiration characteristics are always assessed during the individual readings as they alert the MA to possible problems.

SCENARIO: You work for a Cardiologist. Today you will assess pt's reason for visit, obtain v/s, and document. Office is converting over to EHR therefore you will need to document on both EHR and paper chart during the transition (EHR charting **will not** count, paper documentation **will** count toward total score). Patient is Skilly Usa. She is a new pt and is 29-years-old. She is in the triage room awaiting you. Explain procedures and ask questions PRN

Please let the judge know when you are ready to begin. You will have 15 minutes. Judge will assist you with EHR if needed

SKILLSUSA NLSC

MEDICAL ASSISTING

****

PROGRESS NOTE

PATIENT: ALLERGIES:

_____

_____

_____

_____

_____

_____

_____

SKILLSUSA NLSC

MEDICAL ASSISTING

VITAL SIGNS

TIME LIMIT: 10 MINUTES

CONTESTANT #: _____

CRITERIA	Comp points	POSS PTS	EARNED POINTS	COMMENTS
IDs patient, IDs self, Explains procedure, Cks Allergies, Assembles equipment, washes hands (Medical Asepsis technique) 2`pt each	2	12		
Assesses CC:, asks pertinent questions	5	10		
Correctly takes Temp (cleans, sheath's, gloves, sublingual after beep, listen for beep, remove w/sheath, cleans, replaces equip/supplies)	5	40		
Correctly takes Pulse & Respiration (has own watch, cks P and R characteristics, equivalent of 1 minute (15 or 30 sec each), palm down, below heart level, radial pulse, pt unaware of R ck)	5	40		
Correctly takes Blood Pressure, (Stethoscope is cleaned and ready, Palm is up, brachial palpated, diaphragm placed, cuff is inflated/deflated properly, cuff is not left on for longer than one minute)	5	30		
Brings closure to visit, washes hands (med. Asepsis)Written Documentation: Documents CC & V/S. (correct format; date, time, abbrev. used for P & R, Doc. Characteristics for P&R, Systolic/diastolic, correct order, reason for visit), legible, signs off correctly (line drawn, contestant number)	2	26		
Completed in 10 minutes (1 pt deduction/ 30 sec over)	2	2		
TOTALS		160		

Judges initals ___

Medical Assisting

SKILLSUSA NSLC 2015

CPR

TIME LIMIT: ~~5~~ 10 MINUTES

CONTESTANT INFORMATION: Every Medical Assistant must know and remain current in CPR. Correct technique is of the upmost importance when attempting to save someone's life. Please complete CPR on the pt. You are working with another MA (judge), though she is new. (AED is available as needed)

SCENARIO: A mother has just rushed in with an unresponsive 9-year- old child, approximately 50 pounds. She is escorted to the back where she lays the child on the floor. Mother hollers "Please save my child" The receptionist and other MA are just standing there looking at the child and you. Respond as you have been trained to do. Child is an established pt document actions.

Please let the judge know when you are ready to begin. You will have 5 minutes to complete the scenario. Judge is "other" MA and help PRN.

SKILLSUSA NLSC

MEDICAL ASSISTING

****

PROGRESS NOTE

PATIENT: ALLERGIES:

_____

_____

_____

_____

_____

_____

_____

SKILLSUSA NLSC
MEDICAL ASSISTING
CPR

TIME LIMIT: ~~5~~ 10 MINUTES

CONTESTANT #: _____

CRITERIA	Competency Points	POSSIBLE POINTS	EARNED POINTS	COMMENTS
Notices pt on ground, assess scene for safety	5	5		
Call for AED/911 (points at MA to get AED, Receptionist to call 911)	5	10		
Checks for pulse (carotid)	10	10		
Begins compressions (one hand, midsternal, appropriate landmark)	15	15		
Checks for breathing (looks, listen and feels)	10	10		
Gives 2 appropriate breaths	10	10		
30:2 ratio	10	10		
AED is placed correctly and completed as instructed	5	10		
Responds to 2 person CPR	10	10		
Turns child on side after signs of life established	10	10		
Documents Child in unresponsive, 911 called, CPR initiated, 2 person CPR, outcome	5	25		
TOTALS		125		

Judges initals ___

Medical Assisting

SKILLSUSA NSLC 2015

PAP Set Up/Communication

TIME LIMIT: 10 MINUTES

CONTESTANT INFORMATION: There will be two separate scoring components to this station; the Pap set up with communication and the lab requisition. Multi-tasking is the Medical Assistants most admirable trait. Keep this in mind as you move through this station. Your patient is already in the exam room. Set up for a pap, as you explain to the pt what is needed and expected. Complete lab request.

Scenario: Pappy Youngirl is 16-years-old and scheduled for her first gynecologic exam. Ms. Youngirl is exceptionally scared and nervous, so be thorough and calming! Please set up the room and table while you explain the procedure to the patient. After you have explained the procedure and set the room up you will need to communicate with the lab specimen to be sent and tests needed by completing the lab requisition. After you have completed the lab requisition and have set up the room let the pt know that you will step out for a few minutes while she undresses and puts the gown on. (at this point You will be done)

Ask any pertinent questions of the judge and then let the judge know when you are ready to start. Your time will start when you are ready and end when you exit the room as stated above. You will have 10 minutes.

SKILLSUSA NLSC
MEDICAL ASSISTING
PAP Set Up/Communication

TIME LIMIT: 10 MINUTES

CONTESTANT # _____

CRITERIA	Competency points	POSSIBLE POINTS	EARNED POINTS	COMMENTS
1. Id Self & pt, Ck'd allergies, wash hands	1/2	2		
2. Provided explanation in laymen terms. Did not give too much information. (agitating or scaring pt)	4	8		
3. Deliberate in instructions (Left patient with clear instructions as to what to do, what to expect during procedure, and when to expect results), Calmed pt down	5	25		
4. Asked appropriate questions of patient (including LMP, Hormones or BCP)	5	15		
5. Provided patient with gown and instructed to empty bladder (for ease of exam)	2	4		
6. Gave patient a chance to ask questions, answered questions to pt's understanding	2	4		
7. Set up mayo stand or tray for GYN exam/Pap (drape to mayo stand or disinfected mayo), Laid out correct equipment (slide, scraper, spatula, brush, or Thin prep, and brush, guaiac slide, tissue, Graves speculum, gloves x 2)	3	30		
8. Labeled slide or Thin Prep (pt name, date, Dr., initials, with pencil),	2	8		
9. Washed hands before, and after pt contact	2	4		
10. Multi-tasked (set up room while explaining info to pt, making eye contact as much as possible to ease pt)	4	8		
11. Completed in 10 minutes	2	2		
TOTALS		110		

Judges Initials _____

SKILLSUSA NLSC
MEDICAL ASSISTING

PAP/COMMUNICATION REQUISITION FORM

TIME LIMIT: 10 MINUTES

CONTESTANT INFORMATION: You have just assisted with a pap exam. Part of the completion of this exam is to prepare the patient samples for transfer to the lab. Take the appropriate information obtained from the pap test and complete the lab requisition form provided to prepare specimen for lab.

Scenario information:

Patient: Pappy Youngirl
5510 Convention Ctr Dr.
louisville,KY 12121
Phone: 270-444-1212
DOB: 5/1/1999

Insured: Father
Lance Youngirl
5510 Convention Ctr. Dr.
Louisville,KY 12121
Phone: 270-444-1212
DOB: 2/12/1979

Ins: Cigna
Add: 411Oakridge Hwy
louisville,KY 23234
ID: Z1259678-02
Group: 152

PCP: Jan Purkey
SOF: for patient and doctor

lMP: 5/21/15
BC: YES

Ask any pertinent questions of the judge and then let the judge know when you are ready to start. Your time will start when you are ready and end when you turn your requisition form into your judge. You will have 10 minutes.

Laboratory Corporation of America

☐ Fax
☐ Call — Client Number/Physician's Name — Phone/Fax Number
☐ Mail — Physician's Address — City, State, Zip

8805.03

Faculty Internal Medicine PLLC
7065
11440 Parkside Dr. Ste. 302
Louisville KY 37934
TNX

BYF41990015 1990015

41990015-6 990015 BYF41990015 BYF41990015

BYF41990015

ACCLE ONE
A96877-WILLIAMS, J
A98753-ELY, DANIEL
E67989-PUSKEY, JAN
F43404-BAMD, CALVI
F63242-GUE, CRYSTA
F56489-KINZY, JUDI

HECK ONE
[ ] ACCOUNT BILL
[ ] PATIENT BILL
[ ] MEDICAID
[ ] MEDICARE
STNC( )BS OF TENNESSE
WTNC( )CARITEN INS.
RCHC( )UHC-CENTRAL
CFC( )CIGNA HC MMG C
DCHC( )PGBA CLMS CUST
WCEC( )VALUE CARE
CTNA( )AETNA MDA MMG
HNHC( )JOHN DEERE
FTNC( )DEFINITY HLTH
HPTC( )PHP TENNCARE
CGNHC( )CIGNA
FTRC( )DEFINITY HEALT

Patient's SS #	Patient's ID #	Patient's Name (Last)	(First)	(MI)	Race	Sex	Date of Birth MO DAY YR

NPI / UPIN	Physician's ID #	Collection Time	Collection Date	Urine hrs/vol
		: AM PM	MO DAY YR	hrs_____ vol_____

Physician's Name (Last, First) — Physician's Signature X

Medicare # (include Prefix/Suffix) — ☐ Primary ☐ Secondary

Medicaid # — State — Physician's Provider #

PATIENT: Patient's Address — Phone — City — State — ZIP

RESP. PARTY: Name of Responsible Party (if different from patient) — Address of Responsible Party — City — State — ZIP

INSURANCE: Patient's Relationship to Responsible Party ☐ 1 - Self ☐ 2 - Spouse ☐ 3 - Child ☐ 4 - Other

Insurance Company Name — Plan — Carrier Code

Subscriber/Member # — Location — Group #

Insurance Address — Physician's Provider #

City — State — ZIP

Employer's Name or Number — Insured SS# (If Not Patient)

I hereby authorize the release of medical information related to the service described herein and authorize payment directed to LabCorp. I agree to assume responsibility for payment of charges for laboratory services that are not covered by my healthcare insurer.

X Patient's Signature — Date

MEDICARE ADVANCE BENEFICIARY NOTICE (ABN)

Use a separate ABN when ordering tests which require an ABN. Refer to the back of this form for more information.

@ = Subject to Medicare medical necessity guidelines
% = Subject to Medicare frequency guidelines
# = Medicare deems investigational

NOTE: WHEN ORDERING TESTS FOR WHICH MEDICARE DETERMINATION PERMISSION IS REQUIRED, THE PHYSICIAN SHOULD ONLY ORDER TESTS THAT ARE MEDICALLY NECESSARY FOR THE DIAGNOSIS OR TREATMENT OF THE PATIENT. BE SURE TO WRITE PATIENT'S NAME AND SOURCE OF SPECIMEN ON FROSTED END OF SLIDE IN PENCIL.

Diagnosis/Signs/Symptom in ICD-9 Format (Highest Specificity)

ICD-9 codes are the internationally accepted method of describing the clinical picture of the patient All diagnoses should be provided by the ordering physician or his or her authorized designee. The following is a partial list of common diagnoses in ICD-9 format. Most third party payers require an ICD-9 code to indicate the medical necessity of the test(s) and or profile(s) ordered. For a complete listing of all ICD-9 codes, please refer to a current version of the ICD-9-CM book.

V15.89	High Risk Cervical Screening	623.0	Dysplasia, Vagina	626.8	Abnormal Bleeding
V76.2	Routine Cervical Pap Smear	079.4	Human Papillomavirus	627.1	Post Menopausal Bleeding
622.11*	GIN 1	233.1	GIN 3	616.0	Cervicitis
622.12*	GIN 2	180.9	Malignant Neoplasm, Cervix	795.01	ASCUS

*Use these codes only if histologically confirmed.

IMAGE-GUIDED LIQUID BASED GYN CYTOLOGY OPTIONS (check only one)†‡

For PAPS

Image-Guided Liquid Based GYN Cytology Only
3000 ☐ Pap Test 88175/G0145 %
3069 ☐ Pap Test with Maturation Index 88175/
Image-Guided Liquid Based GYN Cytology with HPV
9123 ☐ Pap Test with High-Risk HPV DNA 88175/G0145 %, 87621
3190 ☐ Pap Test with High and Low-Risk HPV DNA 88175/G0145 %, 87621 x2
Image-Guided Liquid Based GYN Cytology with HPV DNA Reflex
175/G0145 % (will add 87621 w/reflex)
3074 ☐ Pap Test w/reflex to High-Risk HPV when ASC-U
3250 ☐ Pap Test w/reflex to High-Risk HPV when ASCUS or SIL
Image-Guided Liquid Based GYN Cytology with CT/NG Options
3402 ☐ Pap Test with CT/NG 88175/G0145 %, 87491, 87591
21'53 O Pap Test with CTNG *and* High-Risk HPV DNA 88175/G0145 , 87491, 37591, 87621
1027 I=J Pap Test with CT/NG w/reflex to High-Risk HPV DNA when ASC-U 88175/G0145", 87491, 87591 (will add 87621 w/reflex)
3565 ❚❚ Pap Test with CT/NG w/reflex to ASCUS or SIL 88175/G0145 87491, 87591 (will add 87621 w/reflex)

NON GYN CYTOLOGY

009050 ☐ **Abdominal Fluid**
091 ☐ **Bronchial Aspiration** ___Left ___Right
09332 ☐ **Bronchial Brushing** Lobe _____
009035 ☐ **Bronchial Washing** Lobe _____
009001 ☐ **Fine Needle Aspiration** Source _____
009126 D labia / Vulva
009159 D Misc. Fluid _Synovial _CSF Source _____
009126 D Misc. Smear ___Herpes (Tzanck) Source _____
009043 D Pleural fluid
009076 D Sputum
009068 ☐ **Urine** _Voided _Cath

Pt History:

Admitting or Clinical Dx:

HISTOLOGY

Tissue / Source:
☐ Curettage ☐ Biopsy D Excision D Re-excision
# of containers submitted _____ I received at lab

Pre

Post

Clinical Impressions:

Other Pertinent Clinical Data:

Cytology ☐ Yes ☐ No
Special Instructions:

REQUIRED INFORMATION

Check IIIII <III IY'I;
D Hysterectomy) D Postmenopausal Bleeding
D Pregnant D Other

D ThinPrep D Digene Cervical Sampler D Aptima 2 D SurePath

Source - Check (✓)
☐ Cervical ☐ Endocervical 0 Vaginal

Collection Technique - Check (✓)
☐ Brush / Spatula ☐ Swab / Spatula ☐ Cervix Broom Only
☐ Spatula Only ☐ Brush Only ☐ Other

Date, Spec#, & Dx of Previous Cytology/Histology: Previous Biopsy? Y N
If yes, Spec. # _____

CONVENTIONAL GYN CYTOLOGY†

N Pap Smear 88164/P3000 %
] 009100 1 slide ☐ 009191 2 slides
Smear and Maturation Index 88164/P3000 , , 88155
J 009209 1 slide Ci f90074 2 slides

OTHER TESTS / INDIVIDUAL PROFILE COMPONENTS

ADDITIONAL HPV TESTING

507301	☐ High-risk HPV HC	87621
500306	☐ High-risk & Low-risk HPV HC	87621 (x2)
550020	☐ HPV by PCR	87621
500199	☐ HPV by *in situ* Hybridization	88365 x2

Previously Submitted Material:

SKILLSUSA NLSC

MEDICAL ASSISTING

Lab Requisition For PAP ~~(Christina need 40 pts)~~

TIME LIMIT: 10 MINUTES

CONTESTANT # _____

CRITERIA	Competency points	POSSIBLE POINTS	EARNED POINTS	COMMENTS
Completes pt name, DOB, correct collection date, and time, with pen	5	25		
Circled correct dr., completed DR. name, PT. info, responsible party info and SOF marked for both physician and patient	5	30		
Checked correct insurance, marked patients relationship to responsible party, and completed insurance information box, and filled in correct ICD-9 code	5	20		
Checked (other box and stated currently on OCP "birth control"), LMP, Collection Vial used (thinprep), GYN source (cervical) collection technique (brush/spatula)	5	20		
Completed in 10 minutes (1 pt ded q 30 sec over)	5	5		
TOTALS		100		

Judges Initials _____

Medical Assisting

SKILLSUSA NSLC 2015

Patient Safety (Oral Assessment)

TIME LIMIT: 10 MINUTES

CONTESTANT INFORMATION: Patient and Employee safety are very important missions of the Ambulatory Office. As the newly hired Office Manager you note that no Fire Safety plan has been established for the office. Today you will draw out a plan and instruct the employees of the safety plan. Take the time to look over office layout. Making sure employees know safety plans and can evacuate correctly is paramount to a good safety plan.

SCENARIO: As the new office manager you must complete a safety plan. Using the pre-drawn office layout draw red arrows to indicate evacuation from Exam room 4 to safety. After this is completed please explain need for a safety plan and proper evacuation of patients and employees in the case of a fire. Use the acronym **RACE** to help you explain the fire evacuation plan. Explain how to use fire extinguisher; use acronym **PASS** to explain. After you are **assured** the employee understands and can execute your plan have employee sign off on knowledge learned. The judge will act as one of your employees: make sure he understands the Fire Safety plan.

Please let the judge know when you are ready to begin. You will have - 10 minutes to complete this scenario.

SKILLSUSA NLSC

MEDICAL ASSISTING

Patient Safety (Oral Assessment)

TIME LIMIT: 10 MINUTES

CONTESTANT #: _____

CRITERIA	Competency Points	POSSIBLE POINTS	EARNED POINTS	COMMENTS
Draws arrows to nearest exit in RED	5	5		
Succinctly and correctly explains "RACE" (Explains acronym 5 each)	20	20		
Succinctly and correctly explains "PASS" (Explains acronym 5 each)	20	20		
Explains evacuation of patients	20	20		
Checks for understanding by re-demonstration or re-statement (10 pts) of RACE & PASS (corrects errors (Errors x 3 Rescue error, Open door error, pull pin error) associated with acronym by employee 5 each)	25	25		
Has employee sign off on Safety knowledge	10	10		
TOTALS		100		

Judges initals ___

Need to scan daysheets here. Need calculator

SKILLSUSA NLSC

MEDICAL ASSISTING

DAYSHEET

TIME LIMIT: _15__ MINUTES

CONTESTANT #: _____

CRITERIA	Competency Points	POSSIBLE POINTS	EARNED POINTS	COMMENTS
Totaled columns A,B,C,D correctly	5	20		
Totaled Month-to-date correctly for A, B, C, & D	5	20		
Listed correct amounts in Proof of Posting and balanced with Column C Totals this Page	2	10		
Listed correct amounts in AR Control and totaled	2	10		
Listed correct amounts in AR Proof and totaled	2	10		
AR control and AR proof balanced	5	10		
Total deposit and it checked with column B-1 Totals this Page	5	10		
Listed correct amounts in Cash Control and balanced with beginning Cash on Hand	2	10		
TOTALS		100		

Judges initals ___

Medical Assisting – Post Secondary

SKILLSUSA NSLC 2015

Payroll

TIME LIMIT: 15 MINUTES

CONTESTANT INFORMATION: Your physician just realized how versatile you are and has promoted you to Office Manager effective in 2 weeks when the current OM retires. You are currently being trained under her watchful eye. Today you will work with payroll

SCENARIO: As you are being trained by the soon to be retired OM she asks you to complete the Payroll Register as Payroll will be one of your duties bimonthly. She has started the payroll register for you. The PA is salaried, everyone else is hourly. You know that FICA is calculated at 6.2% and MCR is calculated at 1.45% and Kentucky does not have mandatory disability insurance deductions. Using the Circular E tables and employee information provided complete the Payroll Register for the employees and show to the current Office Manager for approval.

Please let the judge know when you are ready to begin. You will have - 15 minutes to complete this component.

PAYROLL REGISTER – BIMONTHLY – Payroll Date _____

	Marital status/ Exempts	Hourly rate	Hrs worked	Reg pay	Over time	Gross Pay	FICA	Federal Inc.Tax	State Inc. tax	M
ALVIS, CRYSTAL, PA	M- 2	SALARY		1600.00						
KENDRICK, DIANA	S- 1	10.00	84							
MCGEE. JACQUELINE	S-4	15.00	80							
NAGY, CHRISTINA	M-0	13.00	82.5							

SKILLSUSA NLSC

MEDICAL ASSISTING –Post Secondary

PAYROLL

TIME LIMIT: 15 MINUTES

CONTESTANT #: _____

CRITERIA	Competency Points	POSSIBLE POINTS	EARNED POINTS	COMMENTS
Calculated reg pay for hrly employees	1	3		
Calculated OT pay for 2 employees	1	2		
Calculated Gross pay for all employees	2	8		
Correctly calculated FICA	2	8		
Correctly calculated MCR	2	8		
Correctly used Circular E to find and recorded State Inc.tax	2	8		
Correctly used Circular E to find and recorded Fed Inc tax	2	8		
Correctly figured total deductions	1	4		
Correctly figured Net Pay	4	16		
TOTALS		65		

Judges initals ___

Medical Assisting –Post Secondary

SKILLSUSA NSLC 2015

Medication Administration Critical Thinking

TIME LIMIT: 15 MINUTES

CONTESTANT INFORMATION: Medication administration is one of the most important skills the MA learns. Correct technique, medication knowledge, correct dosage calculation, and critical thinking are part of the medication administration technique. With correct medication administration techniques we learned safety is important and that if in doubt asking the practitioner is the safest choice.

SCENARIO: You have been moved to the Medication room and have pulled up the first order. The order is as follows:

Order: promethazine 12.5 mg PO now, Demerol 1mg/kg PO now

You review the chart for the pt and note the following:

Exam room 1 – Ms. Skilly Usa – 11-yr-old, wgt 55 lbs
Allergies: Sulfa, Phenothiazines "like Thorazine"
DX: Severe strain L. ankle

In the supply room you have meds labeled promethazine 12.5mg/tablets, Demerol 50 mg scored tablets

Please let the judge know when you are ready to begin. You will have - 15 minutes to complete this component.

SKILLSUSA NLSC

MEDICAL ASSISTING –Post Secondary

Medication Administration Critical Thinking

TIME LIMIT: 10 MINUTES

CONTESTANT #: _____

CRITERIA	Competency Points	POSSIBLE POINTS	EARNED POINTS	COMMENTS
ID Pt & self, Explain procedure	1	2		
Checked for allergies	2	2		
Looked up Medications x2	10	10		
Questioned promethazine due to hypersensitity	20	20		
Washed hands, gathered supplies	5	10		
3 checks on meds	5	15		
Dosage calculation(s) is correct(# to kg, kg to mg, mg to mL)	10	40		
Did **not** give promethazine	20	20		
Measured med correctly (cked med for discoloration or need to shake, Palmed label, poured at eye level)	3	9		
Donned gloves PRN, Administered med(s) using correct technique	2	4		
Removed gloves, disposed of waste appropriately, returned supplies, washed hands	2	8		
TOTALS		140		

Judges initals ___

Medical Assisting

SKILLSUSA NSLC 2015

Secondary- Medication

TIME LIMIT: 15 MINUTES

CONTESTANT INFORMATION: Medication administration is one of the most important skills the MA learns. Practitioners often give verbal orders, the MA writes them into the chart. Correct spelling is most important when writing an order. Correct dosage calculation is equally important prior to giving the medication. Knowing and carrying out the 7 rights of drug administration is the MA's best tool

SCENARIO: The physician is in a foul mood today and because another MA gave the wrong medication he is testing all MAs. He told you to pull the following medications. You wrote them phonetically. Using the drug book provided look up each of the following medications and write the correct spelling on the attached sheet and then pull the correct medications and show to Dr (judge) when you are done. He also told you to work out how much medication a pt should get per his orders (found on bottom of attached sheet)

lay-six – 40mg

car-de-zem - 30mg

n*ap-ro-sin – 375mg*

a-zi-thro-mye-sin -100mg

a-ten-oh-lole- 25mg

Please let the judge know when you are ready to begin. You will have - 15 minutes to complete this component.

CONTESTANT # _____

Write the correct spelling for the following;

lay six – 40mg	
car de zem 30mg	
na*p ro sin – 375mg*	
a zi thro mye sin - 100mg	
a ten oh lole - 25mg	

Calculate the following

Demerol 1mg/kg for a child weighing 55 lbs. On hand you have 50mg/mL. How many mL will you administer? _____

ASA gr 1 is ordered for patient in room 2. In your supply closet you have ASA 120mg scored tablets. How many tablets is given? _____

SKILLSUSA NLSC

MEDICAL ASSISTING

Medication -SECONDARY

TIME LIMIT: 15 MINUTES

CONTESTANT #: _____

CRITERIA	Competency Points	POSSIBLE POINTS	EARNED POINTS	COMMENTS
Looked up and spelled Lasix correctly	10	10		
Looked up and spelled Cardizem correctly	10	10		
Looked up and spelled Naprosyn correctly	10	10		
Looked up and spelled azithromycin correctly	10	10		
Looked up and spelled atenolol correctly	10	10		
Pulled the correct medications per strength	8	40		
Calculate the correct mL to give of Demerol (changed # to kg, kg x mg, mg to mL)	10	30		
Calculate the correct tabs of ASA (converted gr to mg, calculated mg to tabs)	10	20		
TOTALS		140		

Judges initals ___

Medical Assisting

SKILLSUSA NSLC 2015

ADMINISTRATIVE -SECONDARY

TIME LIMIT: 10 MINUTES

CONTESTANT INFORMATION: Filing is a tedious chore but so very important in the medical office. Whether you are filing a chart, filing into a chart or putting results in an alpha-book to file later it is important that you do it correctly. This saves much time and stress. **The office files charts alphabetically and reports chronologically, newest first**.

SCENARIO: You are at the office today as part of your practicum. The office manager has asked that you catch up their filing. Use the tools on this table to file the stack of papers. Report to the office manager (judge) when you are done.

Please let the judge know when you are ready to begin. You will have - 10 minutes.

SKILLSUSA NLSC

MEDICAL ASSISTING

Administrative -SECONDARY

TIME LIMIT: 10 MINUTES

CONTESTANT #: _____

CRITERIA	Competency Points	POSSIBLE POINTS	EARNED POINTS	COMMENTS
Filed alphabetically all charts (5)	5	25		
Filed chronologically all reports (5)	5	25		
Chronological reports are filed with new reports on top or in front of old reports	5	5		
Notifies OM when complete	5	5		
Completed in time frame (2 pts off/30 sec over)	5	5		
TOTALS		65		

Judges initals ___

SkillsUSA
2015 Contest Projects

Medical Math

Click the “Print this Section” button above to automatically print the specifications for this contest. Make sure your printer is turned on before pressing the button.

SkillsUSA

Champions at Work®

Medical Math

National Competition

June 2015

Mark your answers on the Answer Sheets

Label all answers

Put your contestant number on the Answer Sheets

Use appropriate medical rounding rules

1) A doctor's order is to infuse dopamine at 3 mcg/kg/min. You are able to locate a premixed IV bag containing 800 mg dopamine in 250 mL normal saline. The patient weighs 154 pounds. What is the rate(mL/hr) at which you should set the IV pump?

2) A doctor orders cefaclor (Ceclor) for the patient in room 12. Pediatric dosage is 20 mg/kg to be given over 24 hours in two equal doses. The patient weighs 62 lbs. How much will each dose be?

3) Rx: Albuterol oral solution, 3 mg pot id. Disp: 14-day supply. If the pharmacy dispenses albuterol 2-mg/5-ml solution, how much is needed to fill the prescription?

a. 7.5 ml b. 42 ml c. 126 ml d 315 ml

4) A nurse adds 1.6ml of diluent to this vial of powdered penicillin G. How many mL will you give the patient to provide a dose of 200,000 U?

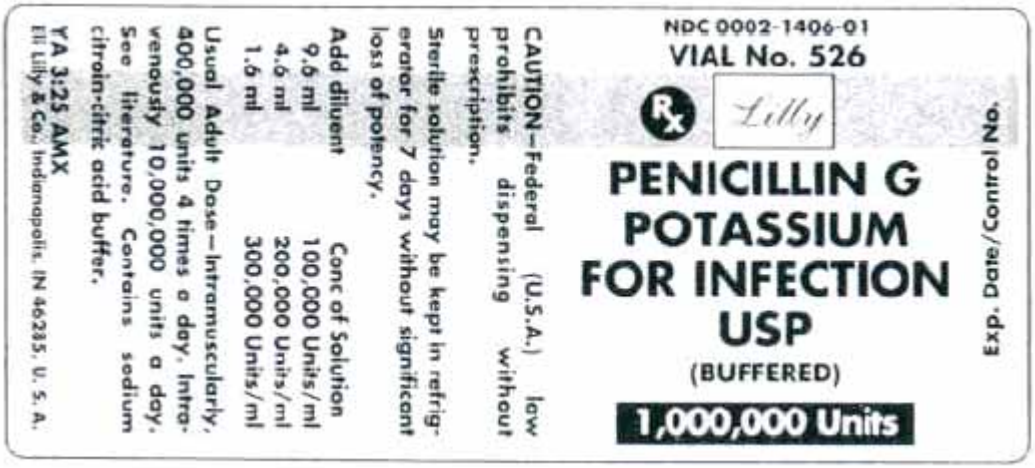

5) Rx: Zovirax 400-mg tabs, i po, 5 X daily. Dispense: 100 tabs. What is the days' supply for the prescription?

a. 10 b. 20 c. 30 d. 50

6) There is a doctor's order for 0.125 mg of Lanoxin. You find it in elixir form as 0.05 mg/ml. How many milliliters will be given?

7) The instructions on a nafcillin vial say to add 3.4 ml of sterile water to the 1g vial resulting in 4.1 ml of solution. How many milliliters would provide a 675 mg dose?

8) Listed below are the ratios of solute to solvent. Which ratio represents a solution which is 40% solute?

a. 2:3 b. 1:2 c. 4:5 d. 3:8 e. 2:5

9) A doctor orders 1 liter D5W with 0.45%NS in 12 hours. How fast should you run the IV in gtts/min. if you are using 15 gtt/ml tubing?

10) Digoxin 0.25-mg tabs cost $10.23/100 tabs and the pharmacy applies a 32% markup on cost plus a $4.50 dispensing fee. What will the patient be charged for 90 tabs?

a. $16.65 b. $13.71 c. $12.15 d. $9.21

11) A patient's temperature has spiked from 99.5 °F to 102.5°F in the last 12 hours. How many degrees Celsius per hour did their temperature increase?

12) There is 250 ml remaining in a bag that contained 30g of dextrose in 750 ml of solution. What is the percentage of concentration of the solution?

13) Order: NS 1 L with 35,000 units of heparin infusing @ 30 ml/hr. Calculate the hourly dosage of heparin.

a. 350 units/hr b. 700 units/hr c. 1,400 units/hr d. 3500 units/hr

14) A doctor's order is for: nitroglycerin 125 mg IV in 500 ml D5W to infuse at 42 mcg/min. Calculate the flow rate in ml/hr to program the infusion pump.

15) Beginning at 0600 and ending at 1800, 800 ml of urine was collected from a patient. The sample was analyzed and found to have a protein concentration of 40 mg/dl. Find the total amount of protein excreted by this patient in mg/day.

16) The order reads: D5W 1000 ml IV at 125 ml/h for 8 h. The drop factor is 10 gtt/ml, and the IV flow rate was correctly set. However, when you check the IV bag the fourth hour after starting the IV, you find 600 ml remaining (instead of the expected 500 ml). thus, the flow rate

is behind schedule, and the hospital allows a 25% IV flow variation with careful patient assessment and if the patient's condition is stable. The patient is stable, so you decide to compute a new flow rate for the remaining 600 ml to complete the IV fluid order in the remaining 4 hours. What is the percent of variation between the two flow rates?

17) Your order is for meperidine (Demerol) 35 mg, IM, STAT. Available is a 2-ml vial containing 50 mg/ml meperidine. On hand are 1ml and 3 ml syringes. How much should you draw up into which syringe?

a. 2.8 ml in 3 ml syringe

b. 2 ml in 3 ml syringe

c. 1.4 ml in 3 ml syringe

d. 0.7 ml in 3 ml syringe

e. 0.7 ml in 1 ml syringe

18) You are asked to make 450g of a 3.5% cream. In stock is 7% and 2% cream. How much of each cream in stock should you mix to make the 3.5% cream?

19) Body surface area (BSA) is determined by using one of the following formulas:

$$BSA(m^2) = \sqrt{\frac{weight(kg) \times height(cm)}{3600}}$$

$$BSA(m^2) = \sqrt{\frac{weight(lbs) \times height(in)}{3131}}$$

What is the BSA of a person who is 6 feet 1 inch tall and weighs 207 pounds? Round answer to the nearest tenth.

20) Rx: Cimetidine 300-mg tab po qid- Disp: 3 month supply. How many cimetidine 300-mg tabs are needed to fill the prescription?

a. 120 b. 180 c. 240 d. 360

21) A patient is receiving 40 mg of ranitidine (Zantac) in 20 ml of D5W every 6 hours. The IV set delivers 20 gtts/ml. Administer the med over 30 minutes. How many drops per minute should the nurse time the IV?

22) An IV was hung at 7:50 AM. It is a liter bag and is infusing at 75 ml/hr. When will this bag need replacement? Give answer in hours and minutes.

23) A health care practitioner has prescribed an Estraderm 0.025 mg/d patch twice weekly. Your patient applied her first patch at 8:00 PM on Monday morning. When should she apply the second patch?

24) Rx: Cleocin 150-mg capsules, 300 mg po bid. Disp: 100 caps. What is the prescription's day's supply?

a. 10 b. 20 c. 25 d. 30

25) Debi is a pediatric client in a hospital in which the policy is to place all children on IV therapy on a buretrol and to only fill the buretrol with no more than 2-3 hours worth of fluid. The nurse fills the buretrol to 90 ml at 10:00 AM. If Debi's IV is running at 34 ml per hour, at what time will the burse need to fill it again so that air does not get into the tubing?

26) You are to give Lidocaine 30 mcg/kig/min to a child weighing 65 lb. The piggyback contains 120 mg Lidocaine in 100 ml NS. At what rate will you set the pump? (round to the nearest tenth)

27) A serum dilution is made using a 1 to 6 ratio of serum to diluents. The glucose concentration of the diluted specimen was found to be 40 mg/dl. What glucose value should be reported for the serum?

28) Dr. William Wiggins is treated Edna Edwards with Amoxil for an ear infection. He writes a prescription for Amoxil 30 mg/kg/day in divided doses q8h for 10 days. Edna is six months old and weighs 26.4 lb. How much will be given to Edna in each dose if the pharmacy dispenses amoxicillin 125-mg/5-ml susp?

a. 3.75 ml b. 4.8 ml c. 5 ml d. 5.2 ml

29) Phenobarbital 180 $mg/m^2/24$ hours given every eight hours is ordered for a child whose BSA (body surface area) is 0.29 m^2. How much will each dose be? (round to the nearest tenth)

30) The physician orders penicillin V 500,000 U po qid for your patient with a hysterectomy. Penicillin V pediatric suspension 4000,000 U per 5 ml is supplied. How many milliliters will you administer?

31) Rx: Heparin IV @ 1400 units/hr. The IV bag contains NS 1 L with 40,000 units of heparin. Calculate the rate in ml/hr.

a. 29 ml/hr b. 30 ml/hr c. 35 ml/hr d. 40 ml/hr

32) Ordered V-Cillin K suspension 400,000 U po q6 h. V-Cillin K suspension is supplied 300,000 U per 5 ml. How many milliliters will the nurse administer?

33) Rx: Ceftazidime 3 gm x 9 doses. How many ceftazidime 10-gram vials will the technician need to reconstitute to prepare the 9 doses?

a. 2 b. 3 c. 4 d. 5

34) You are preparing an injection of morphine. The order reads 15 mg IM. The stock morphine is 48 mg/2 ml. How many ml will you draw up?

35) Doxycycline 100-mg caps cost $23.40/100 capps and the pharmacy applies a 40% markup on cost. What will a patient be charged for 60 caps?

a. $5.62 b. $14.04 c. $19.66 d. $21.36

36) How many grams of a 5% sulfur ointment must be mixed with 180 grams of a 20% sulfur ointment to prepare an 8% sulfur ointment?

37) Rx: Heparin IV @ 2000 units/hr. The IV bag contains NS 1 L with 40,000 units of heparin. The IV set delivers 15 gtt/ml. Calculate the rate in gtt/min.

38) The prescription is for: Codeine sulfate gr 1 po q6h . What will you give the patient? (Do not give the answer in mg).

39) You need to compound sorbitol 2.5% 500 ml by mixing sorbitol 70% with sterile water. How much of each will you need?

a) 321.4 ml of 70% sorbitol and 178.6 ml of sterile water

b) 250 ml of 70% sorbitol and 175 ml of sterile water

c) 325 ml of 70% sorbitol and 175 ml of sterile water

d) 178.6 ml of 70% sorbitol and 321.4 ml of sterile water

40) Using the Birth to 36 Months Boys chart at the end of the exam, find the weight-for-age percentile for a 23-month old boy who weighs 32 pounds.

41) The pharmacist gives the technician 300 ml of a 22% solution. How many 1 oz bottles can be filled if the solution is diluted to make a 3% solution?

42) How many liters of a 5% iodine tincture can be made from 152g of iodine?

43) Two pounds of a viral ointment contains 10.78g of acyclovir. What is the percentage of acyclovir in the ointment?

44) A dosage schedule of a surfactant calls for 4 ml/kg of body weight for a 1200g newborn infant. How many milliliters of surfactant will you need to administer?

45) How many milligrams of active ingredient are there in 5 ml of a 1:250 drug?

46) Your patient with a lumbar laminectomy received heparin 7500 U SQ qid. You have heparin 5000 U per ml available. How many milliliters will you administer?

47) The physician orders heparin 6000 U SQ qd for your patient with a corneal transplant. How many milliliters will you administer?

48-50) Intake & Output. Document the findings on the I & O chart after the answer page, including the 12 hour totals and 24 hour total. The 12 hour totals are questions 48 and 49, with the 24 hour total being question 50. Use these container measurements:

Foam cup = 8 oz	Soup bowl = 180 ml	Gelatin = 120ml
Water carafe = 480 ml	Coffee mug = 6 oz	Juice = 120ml
Popsicle = 90 ml	Sherbet = 120ml	Soda = 8 oz

0700: Polly had abdominal surgery yesterday and has started a clear liquid diet today. She ate 1 Popsicle, ½ gelatin cup, and ½ of the strained juice. She also had 100ml in her urine bag that you emptied.

0800: Polly wasn't feeling well and vomited 100ml of emesis.

1000: Feeling better, she ate ½ of sherbet.

1100: The R.N. discontinued Polly's IV and he documented the 150ml that infused.

1200: For lunch Polly had ½ bowl of low-fat broth, ½ mug of coffee, and 100% serving of gelatin. The urine bag was drained of 300ml of urine and then the RN removed the catheter.

1300: The RM emptied Polly's abdominal Hemovac drain of 90ml of bloody drainage.

1400: Polly was assited to the bathroom where she voided 150ml of clear, yellow urine.

1700: The diet has been increased to a full liquid diet. Polly is helped to the bathroom where she voids 200ml and returns to sit in the chair. Polly has ½ can of ginger ale, 1 bowl of soup, and ¾ of her sherbet.

1800: The RM gives her 15ml of liquid medicine and ½ cup of water.

1900: Polly has a small emesis of 50ml after taking a walk and becoming dizzy.

2100: Polly voids 260ml of clear, yellow urine.

2200: At the end of the shift it is noted that 1/3 of the water carafe has been consumed by the patient. The RN empties the abdominal drain of 20ml of bloody drainage.

0200: Polly turns on the call light and asks to use the bathroom. She voids 200ml and returns to bed. She is thirsty and drinks 1/3 can of lemon-lime soda.

0600: Polly's drain has minimal drainage. She voids 100ml. She drinks ½ mug of tea while waiting for the breakfast tray to arrive.

Birth to 36 months: Boys
Length-for-age and Weight-for-age percentiles

NAME _____

RECORD # _____

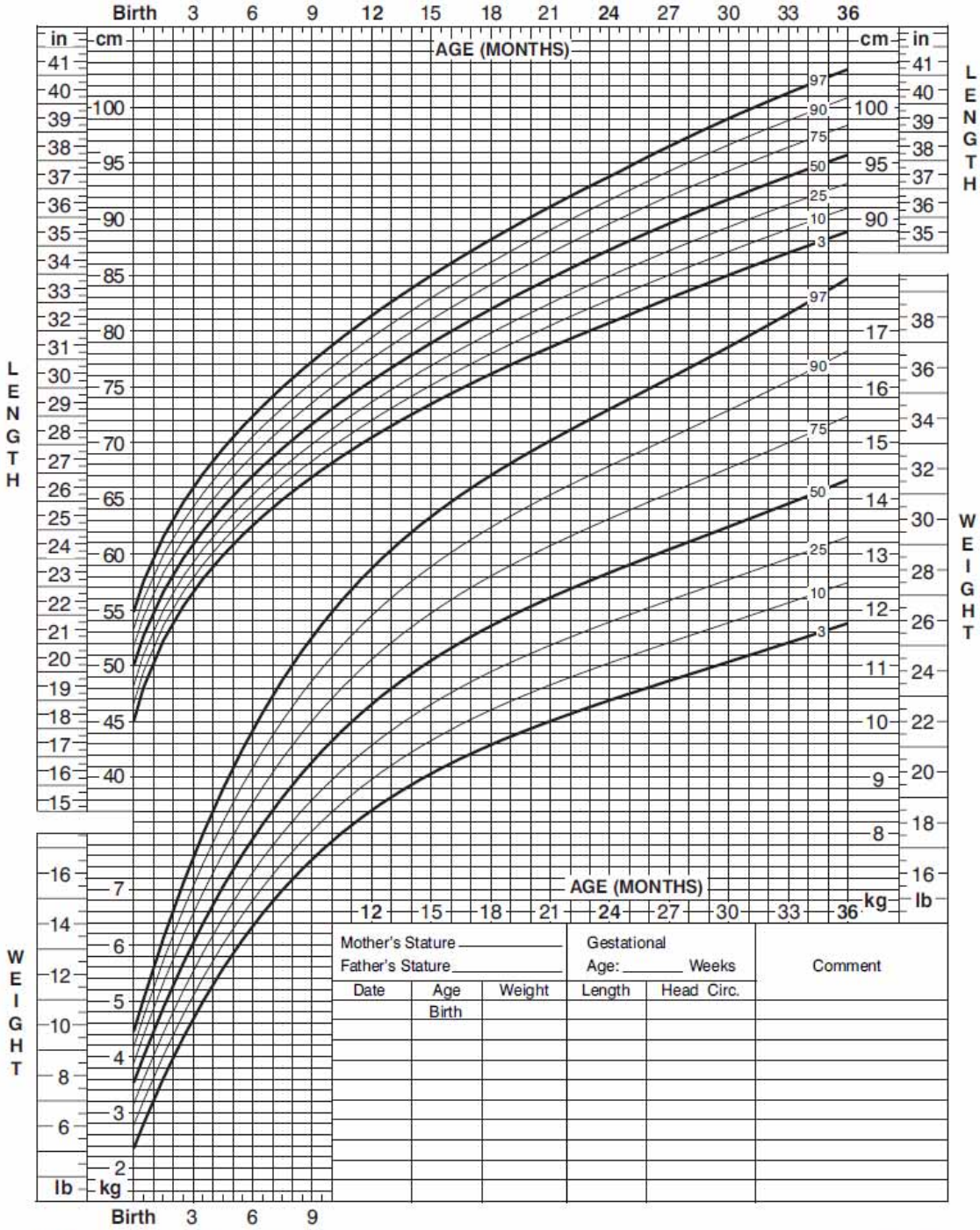

Mother's Stature _____			Gestational Age: _____ Weeks		Comment
Father's Stature _____					
Date	Age	Weight	Length	Head Circ.	
	Birth				

Published May 30, 2000 (modified 4/20/01).
SOURCE: Developed by the National Center for Health Statistics in collaboration with the National Center for Chronic Disease Prevention and Health Promotion (2000).
http://www.cdc.gov/growthcharts

SAFER · HEALTHIER · PEOPLE™

Date_____ Contestant Number_____

Answer Sheet for 2015 Skills USA Medical Math Test

1.	26.
2.	27.
3.	28.
4.	29.
5.	30.
6.	31.
7.	32.
8.	33.
9.	34.
10.	35.
11.	36.
12.	37.
13.	38.
14.	39.
15.	40.
16.	41.
17.	42.
18.	43.
19.	44.
20.	45.
21.	46.
22.	47.
23.	48.
24.	49.
25.	50.

Date:_____

PT:
DOB

COUNTY COMMUNITY HOSPITAL

MEDICAL/SURGICAL FLOW SHEET

room :_____

Diagnosis/Surgery:_____

_____

Weight:_____

	INTAKE						OUTPUT				VITAL SIGNS				
HOUR	PO DIET	TUBE FEEDING	IV	IV	IV	BLOOD PRODUCTS	URINE	BOWEL	DRAIN or TUBE	DRAIN or TUBE	BLOOD PRESSURE	PULSES	RESPIRA-TIONS	TEMP.	Sat O2
7															
8															
9															
10															
11															
12															
13															
14															
15															
16															
17															
18															
12 hr total															
19															
20															
21															
22															
23															
24															
1															
2															
3															
4															
5															
6															
12 hr total															
24 hr total															

MEDICAL RECORD

MED/SURG FLOW SHEET

SkillsUSA
2015 Contest Projects

Medical Assisting

Click the “Print this Section” button above to automatically print the specifications for this contest. Make sure your printer is turned on before pressing the button.

SkillsUSA National Medical Terminology Test – High School Contestant Number _____

Suffixes

1. The suffix that refers to vomiting is
A. -emesis.
B. -emia.
C. -esis.
D. -ulum.

2. Which of the following terms means drainage from the nose?

(A) Rhinolalia
(B) Rhinomycosis
(C) Rhinophyma
(D) Rhinorrhaphy
(E) Rhinorrhea

3. Which ssuffix means abnormal softening?
A. -megaly
B. -malacia
C –stenosis
D - necrosis

4. The patient's complaint of painful menstrual periods will be documented in the medical record as

(A) amenorrhea
(B) dysmenorrhea
(C) menorrhagia
(D) menorrhea
(E) metrorrhagia

5. Which of the following suffixes refers to eating?

(A) "phagia"
(B) "phasia"
(C) "phonia"
(D) "plegia"
(E) "praxia"

6. The suffix for destruction or breakdown is

A. -centesis.
B. -itis.
C. -lysis.
D. -rrhage.

7. The suffix –arche means
A. beginning.
B. bow or arch.
C. connected with.
D. separation.

8. The suffix -dynia refers to
A. bad, difficult.
B. pain.
C. surrounding.
D. thirst.

9. The suffix duct/o means
A. beneath.
B. carry.
C. hormone.
D. protrusion.

10. The suffix ptosis refers to
A. anything formed.
B. breathing.
C. drooping or sagging.
D. spitting or saliva.

11. Which of the following suffixes means "incision into"?

(A) -ectomy
(B) -plasty
(C) -scopy
(D) -stomy
(E) -tomy

12. Which of the following is the term for reconstruction of the eardrum?

(A) Myringotomy
(B) Otoplasty
(C) Stapedectomy
(D) Tympanocentesis
(E) Tympanoplasty

13. Which of the following terms describes surgical fixation of the uterus in a suspended position?

(A) Hysterectomy
(B) Hysterodesis
(C) Hysteropexy
(D) Hysteroscopy
(E) Hysterotripsy .

14. Which of the following is a procedure in which synovial fluid is removed for analysis?

(A) Apheresis
(B) Arthrocentesis
(C) Arthrography
(D) Arthroscopy
(E) Articulation

Define the following words

15. graphy

16. malacia

17. megaly

18. necrosis

19. rrhaphy

20.rrhage

21. rrhagia

22. al

23. lepsy

24. kinesis

25. cele

Prefixes

26. The prefix pachy means
A. abnormal.
B. deficient.
C. new.
D. thick.

27. The prefix that refers to sweet is
A. ex-.
B. gluc-.
C. hydro-.
D. lipo-.

28. The prefix pachy means
A. abnormal.
B. deficient.
C. new.
D. thick.

29. The prefix aut/o means
A. alone.
B. self.
C. together.
D. voice.

30. The prefix that refers to sweet is
A. ex-.
B. gluc-.
C. hydro-.
D. lipo-.

31. The prefix meaning outside or outer is

(A) ana-
(B) dia-
(C) epi-
(D) exo-
(E) peri-

32. The prefix Entero means
A. Around
B. Arm
C. Outside
D. Intenstine

33. The prefix Epi means
A. Cartilage
B. Both
C. Above or Upon
D. Slow

34. Prefix meaning *Difficult*

35. The following Prefixes meaning *Without*

36.Prefix meaning *Before*

37. Prefix meaning *Both*

38. Prefix meaning *Slow*

39. The prefix ab-, in a medical context, means:

a. Toward.
b. Away from.
c. Up from the ground.
d. Down from above

40. The prefix Anti means
A. Against, instead of
B. Down or away from
C. Before, previous
D. Outside, beyond

41. The prefix Brady means
A. Fast
B. Pain
C. Water
D. Slow

42.The prefix Co, con means
A. Together
B. Against
C. Toward
D. Without

43. The prefix Exo means
A. Excision
B. Away from
C. Within
D. Toward

43. The prefix "Hemi" means
A. Full
B. Empty
C. Half
D. Above

44. The prefix pro- means
A. before.
B. near.
C. pus.
D. synthetic.

45. What does the prefix “nulli” mean
A. small
B. inside
C. none
D. many

46. The prefix “syn” means
A. across, through’
B. besides, near, along side of
C. toward, near
D. with, together

47. In the term polydipsia, the prefix poly- means:

a. thirst
b. many
c. hunger
d. little

48. Which prefix means “within”?

a. sub-
b. dia-
c. hypo-
d. intra-

49. The prefix that means “new” is:

a. neo-
b. pro-
c. meta-
d. dys-

50. What is the prefix that means little, scanty

A. tri
B. mega
C. oligo
D. meta

Word Roots

51. A word form that refers to a tumor is
A. bio.
B. fibrin.
C. necro.
D. onco.

52. The word form for death is
A. abrupt/o.
B. corp/u
C. sinstr/o.
D. thanat/o.

53. The word form suppur/o means
A. above.
B. running together.
C. to form pus.
D, to support.

54. The word form cost/o refers to the
A. cell body.
B. clavicle.
C. rib.
D. vagina.

55. The word form meaning plaque or fatty substance is
A. arteri/o.
B. ather/o.
C. arthr/o.
D. edem.

56. The word form atop/o means
A. incomplete, imperfect.
B. strange, out of place.
C. uncontrolled.
D. without an opening

57. The word form spir/o refers to
A. bacteria.
B. breathing.
C. circular.
D. coil.

58. The general meaning of "corpus" is

(A) abdomen
(B) body
(C) chest
(D) head
(E) trunk

59. Which of the following is the term for an abnormally low white blood cell count?

(A) Anemia
(B) Leukemia
(C) Leukocytosis
(D) Leukopenia
(E) Leukoplakia

60. The term "lithiasis" means

(A) constriction of tissue
(B) dissolving
(C) abnormal condition of stones
(D) penetrating a cavity
(E) stretching of tissue

61. Menarche refers to which of the following?

(A) Beginning of menstruation
(B) Development of female characteristics
(C) End of childhood
(D) End of pregnancy
(E) Primary infertility

62 Adipose tissue is made of which of the following?

(A) Fat cells
(B) Lymph nodes
(C) Muscles
(D) Skin
(E) Tendons

63. Which of the following terms refers to the ability to breathe comfortably only when in an upright position?

(A) Apnea
(B) Dyspnea
(C) Eupnea
(D) Hypercapnia
(E) Orthopnea

64. The combining form "cephal/o" refers to the

(A) abdomen
(B) head
(C) neck
(D) ribs
(E) spine

65. The word part pertaining to fingernail is

(A) odont-
(B) olfact-
(C) omphal-
(D) onco-
(E) onych-

66. Which term means the study of the cells, their origin, structure, function, and pathology?

A. Cytology
B. Histology
C. Pathology
D. Radiology

67. Which term means toward the lower part of the body?

A. Caudal
B. Cephalic
C. Proximal
D. Distal

68. Which term means a hospital-acquired infection?

A. Iatrogenic
B. Idiopathic
C. Nosocomial
D. Acquitis

69. This medical term means a surgical incision for the removal of a stone.

a. colotomy
b. lithotomy
c. lithectomy
d. arthroscopy

70. This word root means bone marrow or spinal cord _____.

71. The medical term _____ describes an inflammation of the stomach and small intestine.

72. The medical term _____ describes any abnormal condition or disease caused by a fungus.

73. The term _____ means the medical screening of patients to determine their relative priority of need.

74. The _____ are the bones of the fingers and toes.

75. The term _____ describes a disease named for the person who first discovered it.

Medical Abbreviations

Question 76:

In medical parlance, what is an A-line?

- A. Anatomic line
- B. Afferent line
- C. Analog line
- D. Arterial line

Question 77:

After reading the following, what will a doctor conclude? "Pt presents 3 d S/P TURP, with c/o HA x 2 d."

- A. The patient is female.
- B. The patient has no current complaints.
- C. The patient has a headache.
- D. The patient recently had abdominal surgery.

Question 78:

What do abbreviations Rx, Tx, Hx and Sx mean?

- A. Pharmacy, Treatment Room, Hospital and Sanitorium
- B. Renal, Thyroid, Uterine and Splenic
- C. Prescription, Treatment, History and Symptom
- D. Rectal, Thyroglossal, Hepatic and Splenic

Question 79:

In medical jargon, what are PMH, PSH, SH and FH?

- A. Past medical history, Past surgical history, Social history and Family history
- B. Posterior middle hyoid, Posterior superior hyoid, Superficial hyoid and Foramen hyoidium
- C. Patient mental hospital, Patient surgical hospital, Social hospital, and Female hospital
- D. Post-medical healing, Post-surgical healing, Surgical healing and Functional healing

Question 80:

If the doctor writes, "CN's 2-12 intact", which of the following would be true?

- A. All of the lymph nodes in the cervical chain are normal.
- B. The patient is a man.
- C. The patient is able to close and open the eyes.
- D. The cervical nerves are all functioning normally.

Question 81:

In medical parlance, what is an AKA?

- A. An antibiotic
- B. A patient
- C. The removal of a limb
- D. An alcoholic

Question 82:

If the doctor orders an EKG, what part of the body is going to be examined?

A. Abdomen
B. Heart
C. Peripheral Nerves
D. Brain

Question 83:

In medical jargon, "FH: CAD (M), DM (F)" implies what?

A. The patient's mother had heart disease and the patient's father had diabetes.

B. The patient's mother was an engineer and the patient's father was a computer programmer.

C. The patient's mother had a stroke, and the patient's father had diabetes mellitus.

D. The patient's mother died of an aneurysm, and the patient's father died of a myocardial infarction.

Question 84:

In medical terms, what is a CVA?

A. A heart attack

B. A stroke

C. An aneurysm

D. A type of accountant

Question 85:

At a party, a doctor asked a nurse: "Are you an RN or an LPN?" The nurse replied: "I'm an RN. I got my BSN at Georgetown. Are you an MD or a DO?" The doctor replied: "I'm a DO." Which of the following statements can be concluded from this conversation?

- A. The doctor is a chiropractor.
- B. The doctor is going to get lucky tonight.
- C. The doctor is not really a doctor at all.
- D. The doctor was trained in osteopathic manipulation.

Write the correct abbreviation for the following definitions:

86. blood pressure

87. glucose tolerance test

88. four times a day

89. by mouth

90. diagnosis

91. Fracture

92. congestive heart failure

93. with

94. intravenous

Write the correct definition for the following abbreviations

95. COPD

96. HCT,hct

97. CBC

98. RLQ

99. CNS

100. O.S.

Word Roots

1. B
2. D
3. C
4. A
5. C
6. A
7. A
8. A
9. B
10. B
11. Path/o
12. Pulmon/o or pulm/o
13. Pyr/o
14. Later/o
15. Triage
16. Ven/o or phleb/o
17. keratoplasty
18. cardiomyopathy
19. suprapubic
20. dactylomegaly
21. condition of normally separate parts
22. group of nerve cell bodies
23. congenital absence or closure of a normal body opening
24. sheet or ban of fibrous tissure surrounding muscles and/or body organs
25. the condition of objects in the visual field swaying back and forth

Medical Abbreviations

1. D
2. A
3. E
4. C
5. B
6. B
7. A
8. D
9. E
10. C
11. Under the skin
12. Fe
13. p.o. or PO
14. DIFF or diff
15. Rh
16. DVT
17. Arterial blood gas
18. End stage renal disease
19. Blood urea nitrogen
20. Fasting blood sugar
21. Glucose tolerance test
22. Hematocrit
23. Left eye
24. After meal
25. potassium

SkillsUSA Medical Terminology Test (Post-Secondary)
Contestant # _____

Prefixes (250 Points)

Multiple Choice

1. ***The prefix brady- means:***

- fast.
- slow.
- more than.
- less than.

2. **Which prefix means false?**

- *A. oligo-*
- *B. eu-*
- *C. pseudo-*
- *D. peri-*

3. ***Mega-* is a prefix that modifies a term to add _____ to the definition.**

- A. beside
- B. more
- C. beyond
- D. large

4. **What does the prefix *ab-* mean?**

- A. Away from
- B. Two
- C. to see
- D. toward

5. **What does the prefix *ante-* mean?**

- A. inside
- B. before
- C. small
- D. hall

6. **The prefix *milli-* means:**

- A. very small.
- B. one hundred.
- C. one-thousandth.
- D. one million.

7. **The prefix *extra-*, as in the term *extracurricular*, means:**

- A. outside.
- B. in addition to.
- C. take out.
- D. add to.

8. **In the term *pericardial*, the prefix *peri-* means:**

- A. attached to.
- B. over.
- C. around.
- D. behind.

9. **What does the prefix *re-* mean, as in the term *react*?**

- A. quick
- B. again
- C. now
- D. before

10. **In the term *superinfection*, what does the prefix *super-* mean?**

- A. Large
- B. added to
- C. resistant
- D. beyond

11. **Patients often need intravenous fluids administered. What does the prefix *intra-* mean?**

- A. within
- B. outside
- C. above
- D. between

12. **When one measures the diameter of a circle, what does the prefix *dia-* indicate one should measure?**

- A. around
- B. Inside
- C. through
- D. outside

13. **There is concern that avian flu will become a pandemic. The prefix *pan-* means:**

- A. more than
- B. all
- C. great
- D. wide

14. **The United States is in the western hemisphere. The prefix *hemi-* means:**

- A. half.
- B. upper.
- C. direction.
- D. divided.

15. **Many people suffer from hypertension, or blood pressure that is _____ normal.**

- A. below
- B. stronger than
- C. lower
- D. above

16. **The prefix hidro means _____.**

- A. dry
- B. watery
- C. flat
- D. sweat

17. **In the term *afebrile*, the prefix *a-* means:**

- A. high.
- B. excessive.
- C. without.
- D. low.

18. **Many women suffer from premenstrual syndrome. The prefix *pre-* means:**

- A. before.
- B. with.
- C. during.
- D. after.

19. **An illness or disease can be described as subacute. What does the prefix *sub-* mean?**

- A. hidden
- B. pain
- C. chronic
- D. below

20. **Some teeth are described as multirooted, meaning they have _____ roots.**

- A. separate
- B. many
- C. attached
- D. bent

Fill in the Blank

21. A/An _____is skin taken from one part of the patient's body and transferred to another part.

22. _____is difficulty in digestion. It also is referred to as eructation.

23. _____is difficulty in breathing

24. Impairment of hearing in old age is known as _____.

25. _____ is a congenital defect in which the urethra opens on the anterior surface of the penis.

Suffixes (250 Points)

Multiple Choice

1. Which of the following is the term for an abnormally low white blood cell count?

(A) Anemia
(B) Leukemia
(C) Leukocytosis
(D) Leukopenia
(E) Leukoplakia

2. Which of the following is the term for abnormally large breasts in men?

(A) Gynander
(B) Gynecomania
(C) Gynecomastia
(D) Gynephobia
(E) Gynoplastics

3. Which of the following suffixes refers to eating?

(A) "phagia"
(B) "phasia"
(C) "phonia"
(D) "plegia"
(E) "praxia"

4. Which of the following suffixes means "incision into"?

(A) -ectomy
(B) -plasty
(C) -scopy
(D) -stomy
(E) -tomy

5. Which of the following is the term for reconstruction of the eardrum?

(A) Myringotomy
(B) Otoplasty
(C) Stapedectomy
(D) Tympanocentesis
(E) Tympanoplasty

Fill in the Blank

6. Colporrhaphy is the _____.

7. Which term describes surgical fixation of the uterus in a suspended position?

_____

8. The following is a surgical procedure in which a pendulous breast is lifted and fixed to the chest wall?

_____

9. This procedures is indicated when an abnormal growth is identified on barium enema x-ray study?

_____

10. A patient scheduled for _____will undergo an electrical study of the brain.

Give either the definition of the suffix or write the correct suffix for the definition given

11)osis

12) hardening

13) pexy

14) drooping, downward displacement

15) paralysis

19) surgical created opening for discharge of waste from the body

20) rrhea

21) rrhexis

22) View of

23) destruction or loosening

24) ectomy

25) vomit

Word Roots (250 Points)

Multiple Choice

1) The general meaning of "corpus" is

(A) abdomen
(B) body
(C) chest
(D) head
(E) trunk

2. An area of dead myocardial tissue is called

(A) angina pectoris
(B) hypertrophy
(C) an induration
(D) an infarct
(E) stenosis

3. The term "lithiasis" means

(A) constriction of tissue
(B) dissolving
(C) abnormal condition of stones
(D) penetrating a cavity
(E) stretching of tissue

4. aur-

A. ear
B. eye
C. tongue
D. lip
E. mouth

5. Blephar

A. eyelash
B. bile
C. eyelid
D. sac
E. lip

6. Cephal-
A. head
B. neck
C. Foot

7. Cheil-
A. lip
B. Mouth
C. tongue

8. Encephal-
A. brain
B. head
C. Scalp

9. What does the combining form angi/o mean?

A. vessel
B. Vein
C. Muscle
D. Tendon

10. What do the combining forms hem/o and hemat/o mean?
A. hair
B. blood
C. eyes
D. tongue

Fill in the Blank
11 _____ means disease

12 _____ means lung.

13 _____ is the combining form for fever

14. The term that means toward one side _____.

15. The screening of patients to determine their priority of need and the proper place of medical treatment is called _____.

16. Name two word roots for vein. (you must name both correctly to receive credit)

a.

b.

17. Surgical transplant of the cornea. _____

18 Disease of the heart muscle. _____

19. Above the pubic bone. _____

20. Enlargement of the finger or toe. _____.

Give the correct Definition for the term.

21. Anastomosis

22. Ganglion

23. Atresia

24. Fascia

25. Oscillopsia

Abbreviations (250 Points)
Matching Questions

1. ___ BP, B/P
2. ___ Bacti
3. ___ Abd
4. ___ AS
5. ___ ANA

a bacteriology
b left ear
c American nurses' Association
d blood pressure
e Abdomen, Abdomina

6. ___ Inch or Second

7. ___ BM

8. ___ Bx, bx

9. ___ BS

10. ___ BKA

A Bowel Movement
B "
C Below knee amputation
D biopsy
E Blood Sugar

Fill in the Blank

11. The notation "subq" indicates

12. What is the chemical symbol for iron?

13. Give the abbreviation for orally, or by mouth

14. Give the abbreviation for differential count (of white blood cells)

15. Give the abbreviation for rhesus factor.

16. Give the abbreviation for deep vein thrombosis.

17. Give the meaning of the abbreviation ABG

18. Give the meaning for the abbreviation ESRD

19. Give the meaning for the abbreviation BUN

20. Give the meaning for the abbreviation FBS

21. Give the meaning for the abbreviation GTT

22. When a doctor asks to order an HCT, what is he ordering?

23. OS is a standard abbreviation for

24. Instructions to take a medication "pc" means

25. "K" is the symbol for

SkillsUSA Medical Terminology Test (Post-Secondary) Answer key

1. B
2. C
3. B
4. A
5. B
6. C
7. A
8. D
9. B
10. C
11. A
12. D
13. B
14. C
15. B
16. D
17. A
18. C
19. D
20. B
21. Auto graft
22. Dyspepsia
23. dyspnea
24. presbyopia
25. hypospadias

Suffixes

1. D
2. C
3. A
4. E
5. E
6. Surgical repair of the vagina
7. Hysteropexy
8. Mastopexy
9. Colonoscopy
10. Electroencephalogram
11. Abnormal condition
12. Sclerosis
13. Surgical fixation
14. Ptosis
15. Complete loss of strength in an affected limb or muscle group
16. hemorrhage
17. surgically cutting into
18. surgical repair
19. ostomy
20. excessive flow
21. rupture
22. scopy
23. lysis
24. surgical removal
25. emesis

SkillsUSA
2015 Contest Projects

Mobile Electronics Installation

Click the “Print this Section” button above to automatically print the specifications for this contest. Make sure your printer is turned on before pressing the button.

CUSTOMER SERVICE SCENARIO

A CUSTOMER COMES INTO YOUR SERVICE CENTER HE HANDS YOU HIS CAR KEYS .HE STATES THAT HE PAID TO HAVE A NEW RADIO INSTALLED INTO HIS CAR.THEN HE SAYS THAT HE IS GOING ACROSS THE STREET TO HAVE LUNCH AND THAT HIS CHILD IS ASLEEP IN THE BACK SEAT HE WON’T BE A PROBLEM.

HOW DO YOU DEAL WITH THIS

_____

Contestant

CUSTOMER SERVICE SCORING SHEET

50 points possible 25 each

_____ How did contestant react (defensive-, angry - positive +)

_____ Did they have offer to get a Manager

Contestant _____

INTERVIEW

SCORE SHEET

0-15 points each

1. What qualifications do you have for this position? _____

2. Why should I pick you over another applicant? _____

3. What experience do you have in this field? _____

4. What can you bring to this company? _____

5. Where do you see yourself in 5years? _____

6._____

7._____

Total _____

Judges can use their own questions these are samples(must use same with all

SPEAKER WIRING

JUDGING SHEET

When contestant is done with each configuration check with dmm. scoring 0 or 10 per each task

1 ohm _____

32 ohms _____

4 ohms _____

4 ohms _____

16 ohms _____

2 ohms _____

2 ohms _____

8 ohms _____

8 ohms _____

12 ohms _____

Total points _____

Contestant number _____

Contestant _____

SOLDERING

5 of each connection

10 points possible each connection.

Must be separate

Connections

1. T- spice _____

2. End to End (lineman spice) _____

3. Resistors on circuit board _____

TOTAL_____

SOLDERING TASK

DO THE THREE SOLDERING TASKS AS

PER M.E.C.P. GUIDELINES FOR EACH

TYPE OF WIRE CONNECTION

Ignition switch wiring

Wire switch per wiring colors below

12 volt constant (battery)	Yellow
12 volt accessory	Red
Ignition 1	Gray
Start (crank)	Black

Test contacts with DMM

CONTESTANT _____

RADIO TEST

WIRE RADIO CONNECT TO FOUR SPEAKERS

Judges score 0-25 on each

150 points possible

Testing 25 _____

Power 25 _____

Speaker 25 _____

Connections 25 _____

Adjustments 25 _____

Demonstration 25 _____

Safety violations - _____

TOTAL _____

Mobile Electronics Installation - Head Unit and Amplifier Installation Score Sheet

Score Head Unit separately from Amplifier
Head Unit Sections = 10 Max Points Each
Amplifier Sections = 15 Max Points Each
Total of All Sections is Max of 150 Points

An "Average" score is considered completed basic activity
An "Average" score is half of the maximum points available
An "Above Average" score is extra attention to detail
Any "Safety Violations" deduct from point totals

Head Unit	**Score (10 Max)**	**Amplifier**	**Score (15 Max)**
Testing - *Use of DMM to test wires and accurately idenfify +12v Constant, Ignition, etc.*		Testing - *Use of DMM to test wires and accurately idenfify Power, Ground and Remote*	
Power - *Does the unit hold memory (+12v) and does it come on with the Key (ACC)?*		Power - *Accurate connection of Batt +12v (incl Fuse), GND and Remote Turn-On*	
Speakers - *Are the speaker wires connected to the harness and ALL correctly wired (+ & -)?*		Speakers - *Are the speaker wires connected to amplifier and ALL correctly wired (+ & -)?*	
Connections - *General quality and integrity of the crimped connections at the harness?*		Connections - *General quality and integrity of the connections specifically at the amp, battery, fuse holder, etc?*	
Adjustments - *Is the balance correct? (Requires amp connected to verify). Fader is not applicable in this activity.*		Adjustments - *Xover settings to Full Range, Input switch to 2 ch, gains level matched for spkeaker pairs.*	
Demonstration - *Shows Judge an operational clock with the set time. Shows some basic operation as if you were a customer. Shows his work.*		Demonstration - *Shows Judge an operational amplifier playing four speakers. Shows the work, incl connections, fuse, settings and explains why.*	
Safety Violations - *Mark any safety issues with dash disassembly, where dash parts were placed (get scratched) head unit face positioned on the table to scuff, etc. Also any wiring w/o good connections or proper fusing.*		Safety Violations - *Mark any safety issues with amplifier high current power/ground wiring, fuse integrity, speaker or RCA connections, etc. Wires should be neat and easily identifiable.*	
Total (Head Unit)		**Total (Amplifier)**	

Overall Total

SkillsUSA
2015 Contest Projects

Mobile Robotics Technology

Click the “Print this Section” button above to automatically print the specifications for this contest. Make sure your printer is turned on before pressing the button.

2015 SkillsUSA Mobile Robotics Competition

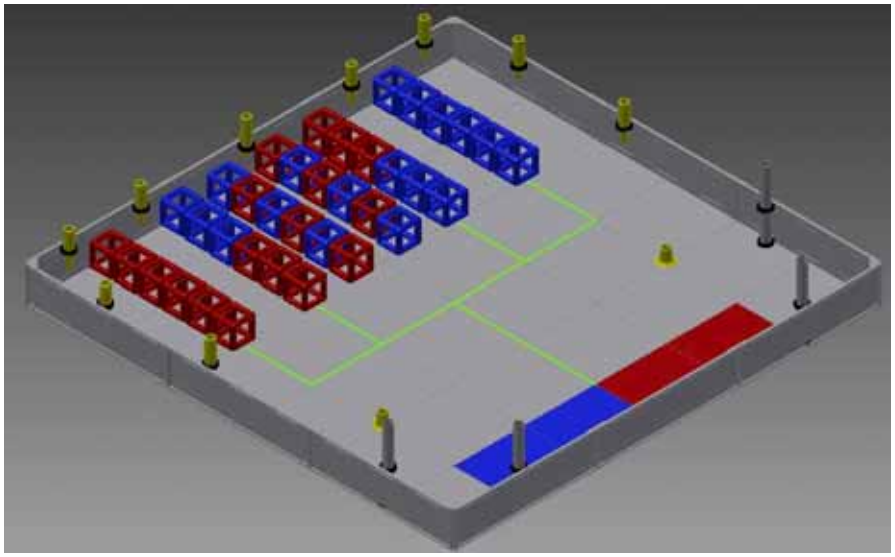

Figure 1: SKILLS 2015 playing field

The Game
In this year's challenge, teams are tasked with moving red and blue cubes into color-coded scoring zones during a two-minute autonomous and operator control round.

The Field
The 12' x 12' field contains 36 cubes; 18 are blue and 18 are red. The field contains a total of four posts that are approximately two feet tall. Two are in the blue scoring zone and two are in the red scoring zone. There are a total of nine yellow tower sections mounted to collars along the perimeter of the field. One tower base is placed in each scoring zone of the field. The field contains white tape lines that form a pattern on the inside of the field.

The Round
A team's robot is located completely inside the starting square at the beginning of the round. For the first 60 seconds of the round, the robot operates completely autonomously. Using sensors and pre-programmed instructions, the robot must attempt to strategically move the cubes across the playing field and into the scoring area. During the next 60 seconds of the round, drivers take control of the robot. Teams score points for each cube placed completely inside the corresponding color floor tiles or on a two foot post. Teams may also build a "multiplying tower" by placing yellow tower sections into the yellow bases and then placing the appropriate colored cube onto the tower.

Scoring
Red Cube placed completely on a red tile: one point
Blue Cube placed completely on blue tile: one point
Red cube placed completely on blue tile: zero points
Any stacked cubes of the same color are awarded an additional point value based on the elevation. For example a red cube stacked on top of a red cube located inside the red scoring zone is worth two points.
Any matching color cubes placed on two foot posts will be considered a multiplier value and additional cubes placed will increase the value. For Example, one cube on the two foot post = 2x multiplier; two cubes = 3x, 3three cubes = 4x, four cubes = 5x

End of round bonus
Any yellow tower pieces assembled with a matching colored cube placed on the tower will multiply the "end-of-round" total score by the number of cubes that are placed on the tower.

SkillsUSA
2015 Contest Projects

Marine Service Technology

Click the “Print this Section” button above to automatically print the specifications for this contest. Make sure your printer is turned on before pressing the button.

SkillsUSA
2015 Motorcycle Service Technology
Street XG two hour task

Objective Information Sheet

350 Points
Time Limit 120 Minutes

OBJECTIVE:

Given the tools and workstation instructions, participants will correctly perform a valve adjustment on the front and rear head. Contestants will also Remove, inspect and install the clutch assembly. Both taskes will be performed on the Street XG engine.

SPECIFIC SKILLS:

The contestant will:

1. Follow the instructions outlined in the station test materials to correctly perform the stated objective.
2. Use the tools and equipment properly and safely.
3. Clean and organize the work area.

The judge must re-set the station for the next participant.

SkillsUSA
2015 Motorcycle Service Technology
Street XG two hour task

Judge's Score sheet

Time Limit 120 Minutes

Contestant #_____ Start Time:_____

Judge's Initials:_____ Stop Time:_____

Scoring Directions: The performance of each task should be either "0" or full points, i.e. "25"or "50".

Use the following criteria listed below: **"0"** indicates the contestant ***could not or did not*** correctly perform this task. **"50"or "100",** indicates the contestant **did perform or demonstrate** the skill correctly.

The judge should monitor the participant's progress to ensure safe use of the equipment.

- **PERFORMANCE:** Grade the student's performance and record the score below.
- VALVE ADJUSTMNT

1) Correctly disassembled the front and rear valve covers, remove alternator access. **(0,25)** _____
2) Correctly adjust valves (front cylinder head). **(0,50)** _____
3) Correctly adjust valves (rear cylinder head). **(0,50)** _____
4) Correctly assemble valve covers and access cover. **(0,50)** _____

- CLUTCH REMOVAL , INSPECTION, INSTALLATION

1) Correctly remove primary cover and install crank lock. **(0,25)** _____
2) Correctly remove clutch assembly measure and inspect clutch. **(0,50)** _____
3) Correct assembly of clutch assembly in clutch hub and basket. **(0,50)** _____
4) Correct installation of clutch and primary cover. **(0,50)** _____

Total Possible Score 350 points **Total point** _____

SkillsUSA

Harley-Davidson Street Engine two hour task

In this two hour section you will be working on the Harley-Davidson Street engine. The engines are mounted on shop work stands. When loosening and torqueing tight fasteners you may need your facilitator to steady the stand to avoid it tipping over. All fasteners you will be working with have been pre loosened and set to half torque. During the tasks in this station you will be following an amended shop manual and all torque values will be listed, set torque to the values listed in this manual (note these values are not correct for a running engine and are not actual specifications.) Procedures have also been amended to suit this task. Always follow the correct service manual when working on a running motorcycle.

There will be two tasks in this section:

Valve Lash Adjustment
Perform a valve lash adjustment on the front and rear cylinders. Follow the procedure in this manual, during the task there will be critical points to STOP and have the facilitator grade your work.

Clutch Removal and Inspection

Perform a clutch removal , inspection and installation. Follow procedures in this manual, there will be measurements and critical points to STOP and have the facilitator grade your work.

Valve Lash Adjustment

Preparation

1. Remove spark plugs
a. Remove (9) & (8) alternator access cover and fasteners. Make sure to collect sealing O-ring (7). Figure 4-33
b. Remove valve covers. Figure 4-9
c. Using a socket rotate the engine counterclockwise from the removed alternator access cover.

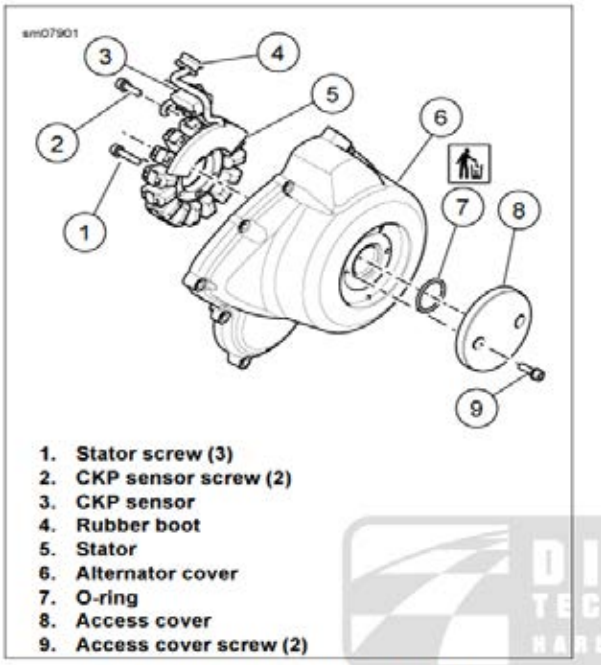

Figure 4-33. Alternator Cover Assembly

Figure 4-9 valve cover

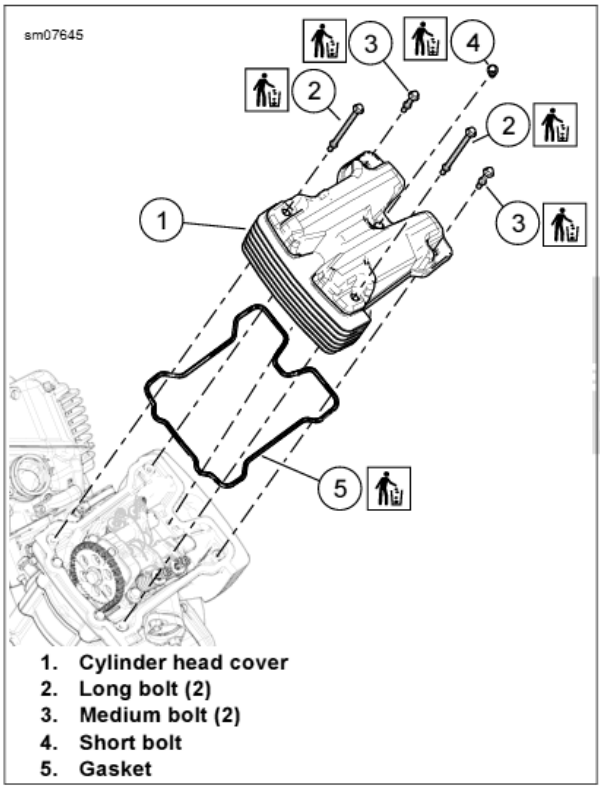

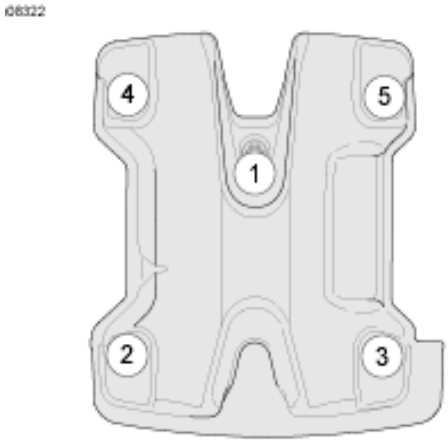

Figure 4-10. Cylinder Head Cover

Tightening Sequence

INSPECT AND ADJUST VALVE LASH

1. See figure 2-30. rotate engine so that the cylinder to be adjusted is on TDC. Top Dead Center.
2. Refer to cam timing marks (1),(2)
3. See figure 2-31. loosen jamnut (2) back off adjuster (1) do not remove jamnut or adjuster , only loosen.

Repeat the process for all four valves.

4. STOP have facilitator check valves out of adjustment.
5. Adjust the valves using TAPPET WRENCH HD-51502 and feeler gauges. Figure 2-31

Turn valve adjuster (1) clockwise to reduce valve lash. Turn counterclockwise to increase valve lash.

Measure valve lash (3) adjust to specification.

VALVE LASH SPECIFACATIONS

Intake	0.005-0.007 in
Exhaust	0.007-0.009 in

VALVE ADJUSTER JAMNUT TORQUE VALUE

45 in-lbs

5. Torque all jamnuts and check the clearance again.

Fill out work sheet for this section.

6. STOP have facilitator check clearances and work sheet.
7. Repeat the process for the other cylinder.
8. Install Valve covers, install Alternator access cover. Follow Figure 4-10 for valve cover tightening sequence.

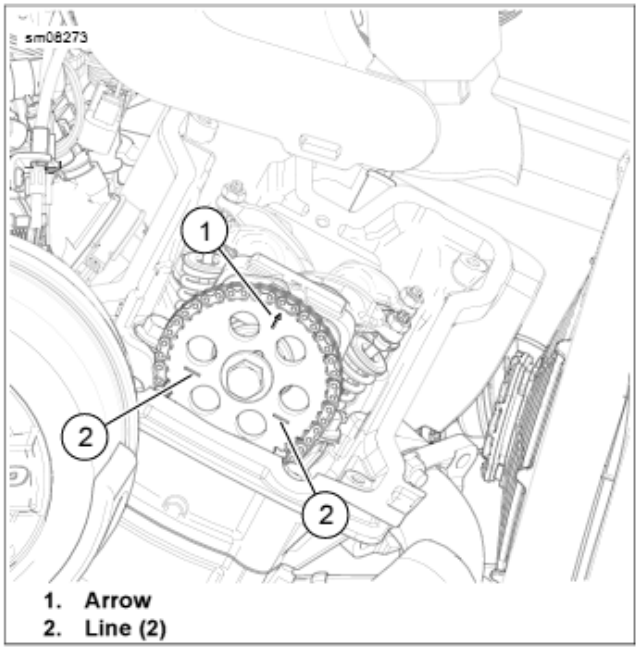

Figure 2-30. Cam Timing Marks

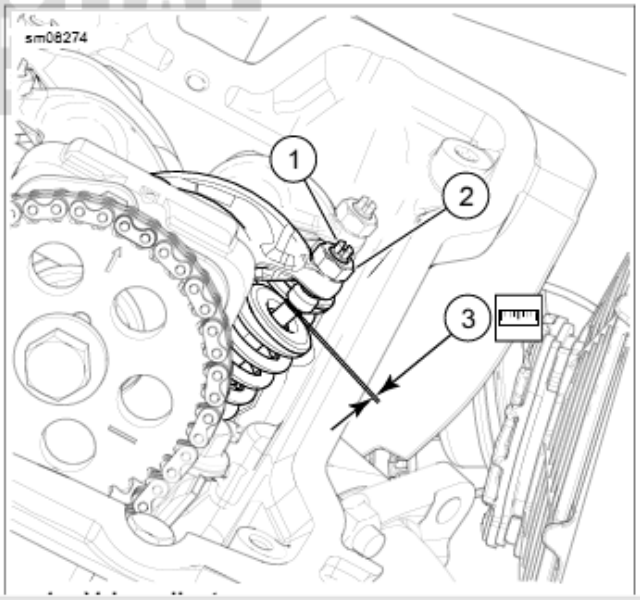

Figure 2-31 Valve adjuster

TORQUE VALUES

Alternator access cover screws	45 in-lbs	Spark Plugs	9 ft. lbs
Valve cover bolts	45 in-lbs		

Clutch Inspection, Installation

1. Remove primary cover Figure 4-34 (2)
2. Collect clutch actuator with cover Figure 4-36
3. In this exercise reuse the primary gasket, if damaged or ripped your facilitator can provide a replacement. Always replace with new on a running motorcycle.
4. Install CRANKSHAFT LOCKING TOOL HD-51281 Figure 4-37

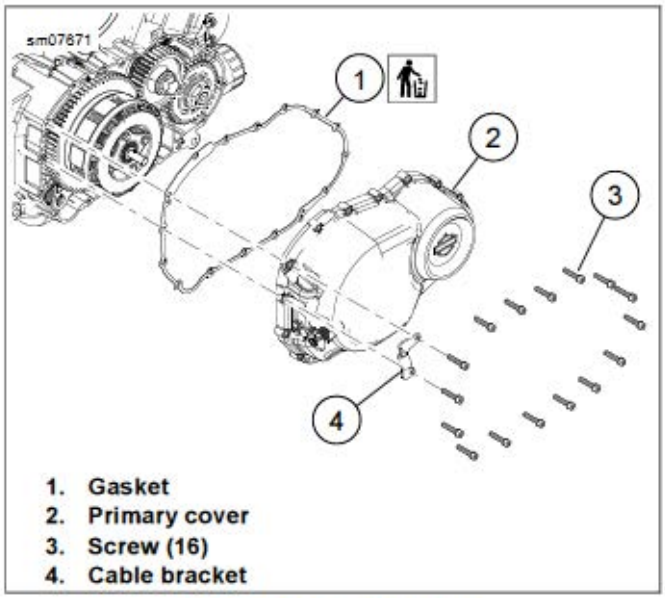

Figure 4-34. Primary Cover

CRANKSHAFT LOCKING TOOL HD-51281

Figure 4-37 CRANKSHAFT LOCK HD-51281 installed

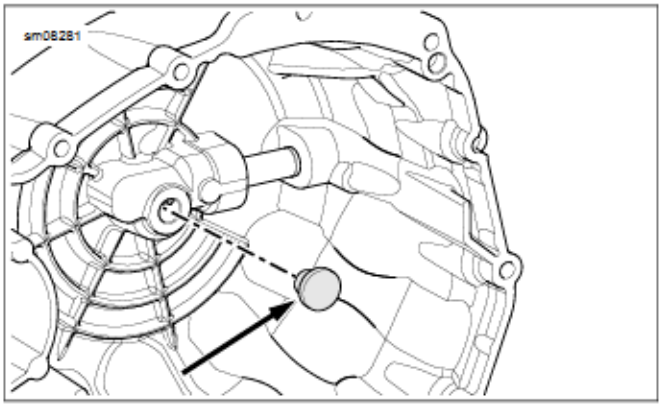

Figure 4-36. Clutch Actuator

5. Remove clutch lifter plate (2) Figure 5-10
6. Collect clutch springs.
7. Install CLUTCH LOCKING TOOL HD-51505 Figure 5-9
8. Remove clutch Figure 5-10
   a. Remove clutch nut (3)
   b. Remove cup washer (4)
   c. Remove clutch (5)
   d. Remove thrust washer (6)
9. Remove clutch plates from basket, note order and direction. Inner most friction plate has more oil grooves than the other plates. Outer most friction plate is narrower to accommodate the damper spring and seat. Figure 5-11, Figure 5-12, Figure 5-13
10. Check friction plates:
    a. Look for worn or damaged fiber surface material.
    b. Measure thickness of each plate with a dial caliper or micrometer. Record measurements on the task sheet.
11. Check steel plates
    a. Lay each plate on a precision flat surface.
    b. Insert feeler gauge between plate and flat surface in several places.
    c. Max plate warp is more than (.006 in) Follow task sheet to record measurements.

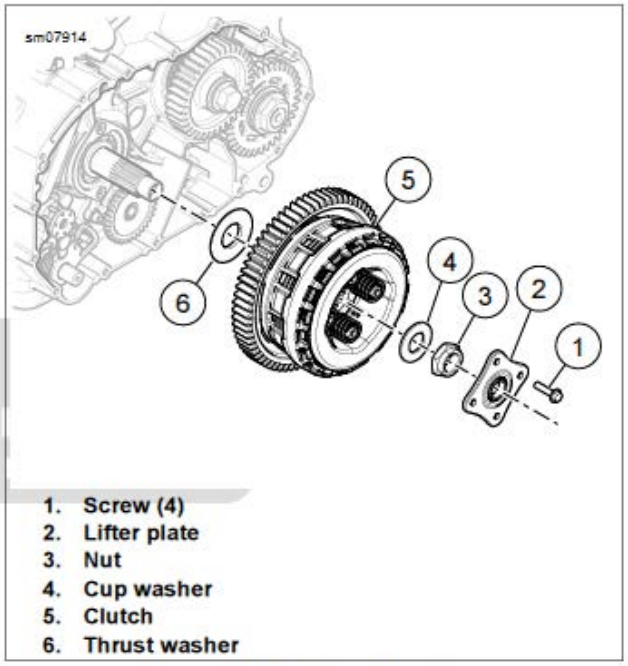

Figure 5-10. Clutch Assembly

Figure 5-9. CLUTCH LOCKING TOOL

H-D 51505

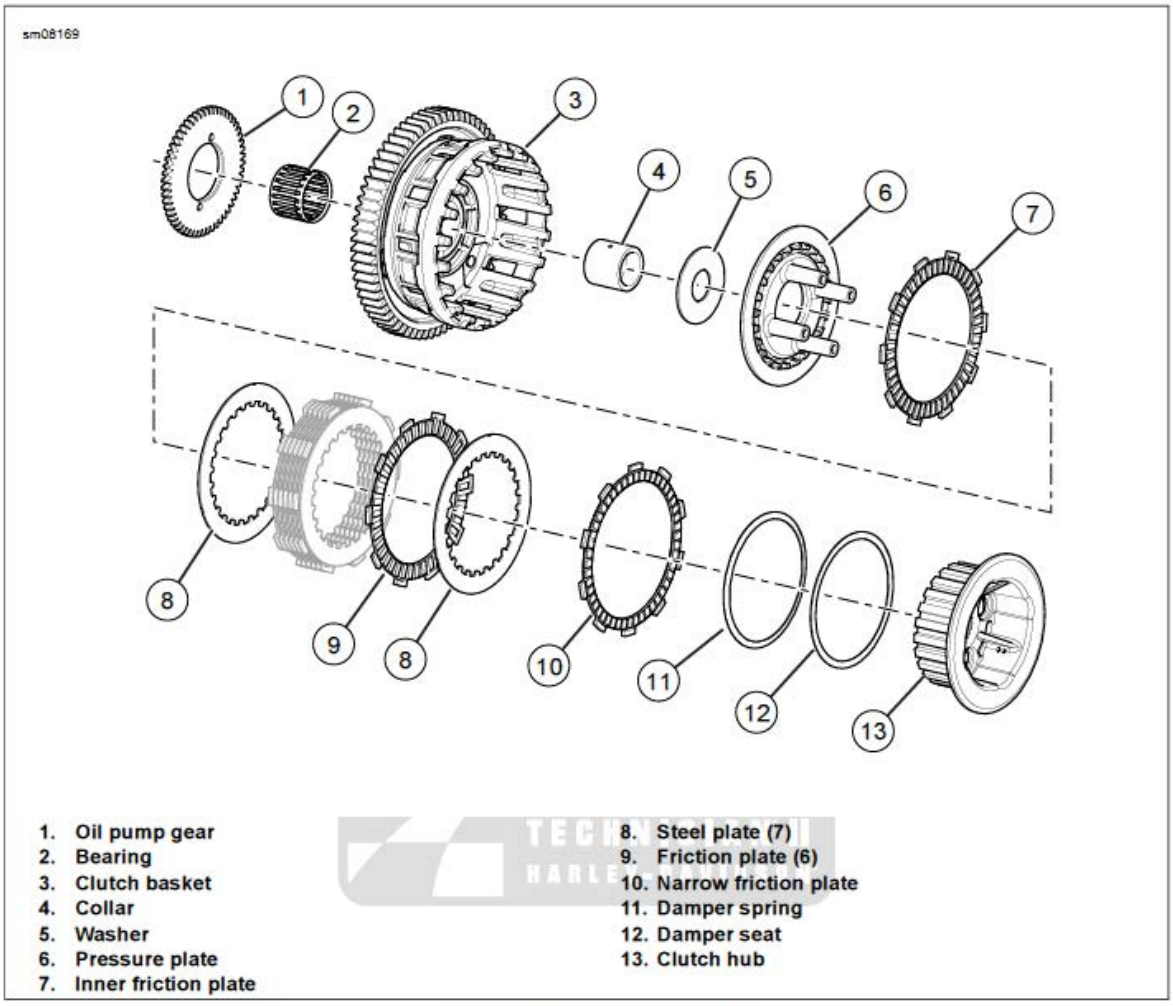

Figure 5-11. Clutch Assembly

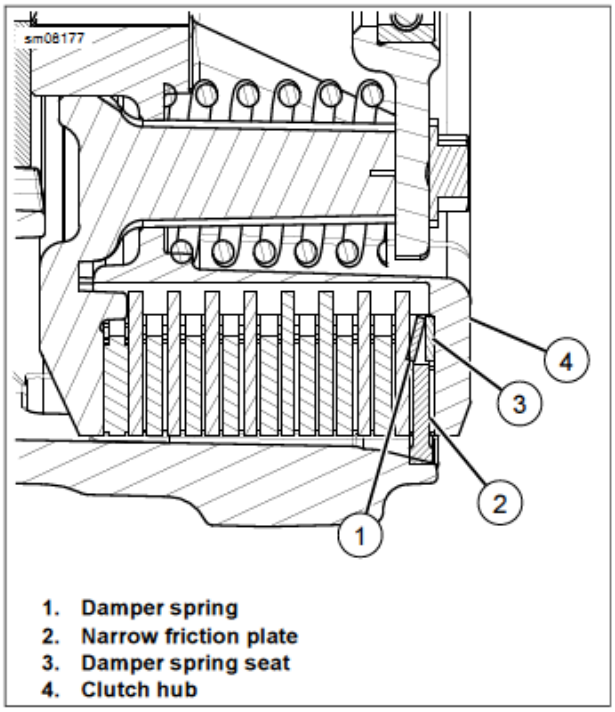

Figure 5-12. Damper Spring and Seat

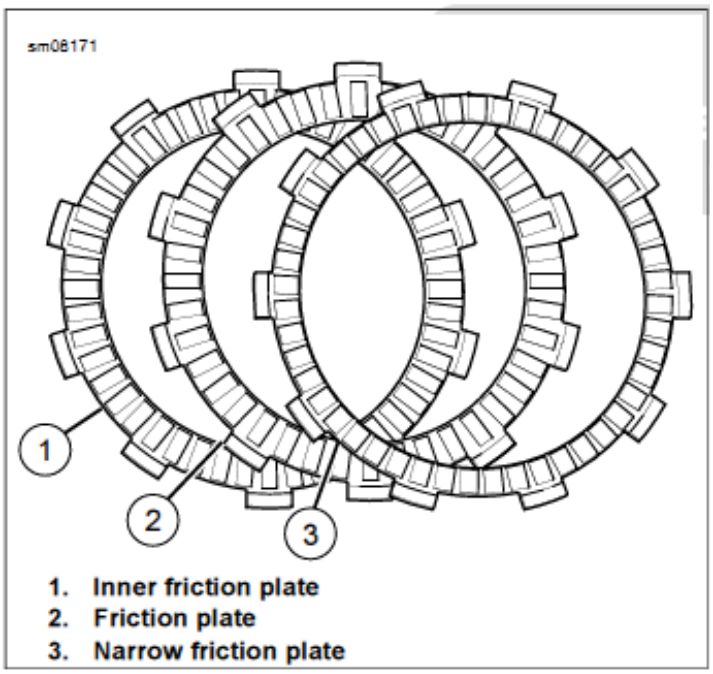

Figure 5-13. Friction Plates

CLUTCH ASSEMBLY

1. Using Figures 5-11, 5-12, 5-13 assemble the fiber and steel plates in proper order on the clutch hub. STOP have the facilitator check the assembly.
2. Use Figure 5-11
   a. Install bearing (2), if removed.
   b. Install oil pump gear (1).
   c. Install collar (4).
   d. Install washer (5).
3. Assemble pressure plate and hub assembly.
   a. See Figure 5-12. Install damper spring seat (3) and damper spring (1) on clutch hub (4).
   b. Install narrow friction plate (2).
   c. See Figure 5-11. Install steel plates (8) and friction plates (9).
   d. Install pressure plate (6).

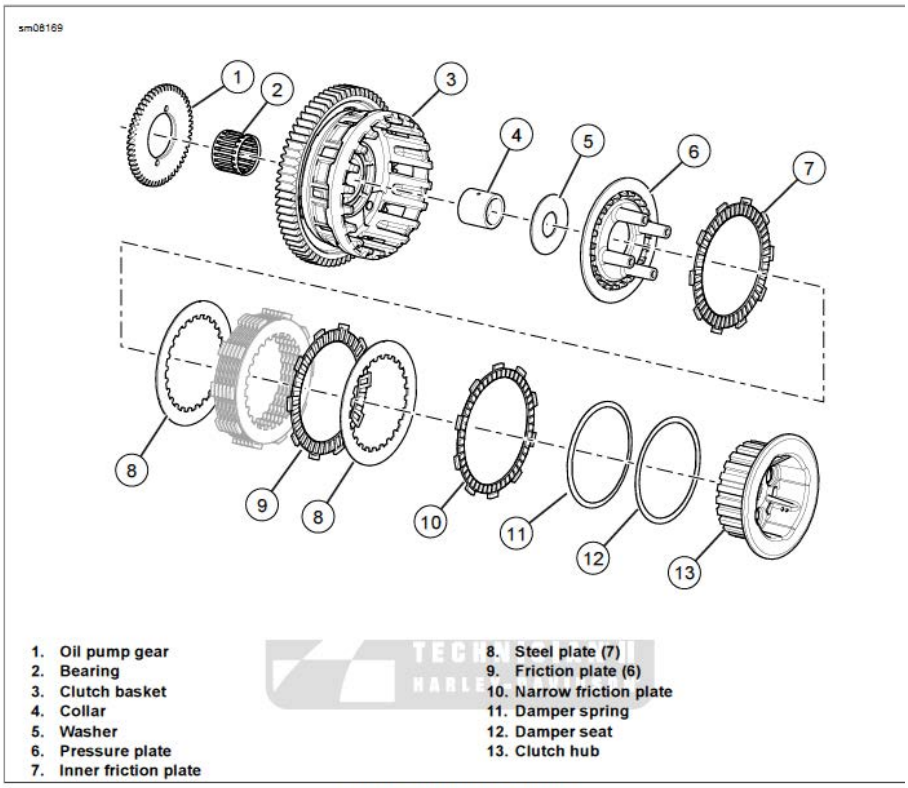

Figure 5-11. Clutch Assembly

6. See Figure 5-14. Install pressure plate and hub assembly into clutch basket.
   a. Align tabs of inner friction plate and friction plates (1).
   b. Align tabs of narrow friction plate (2).

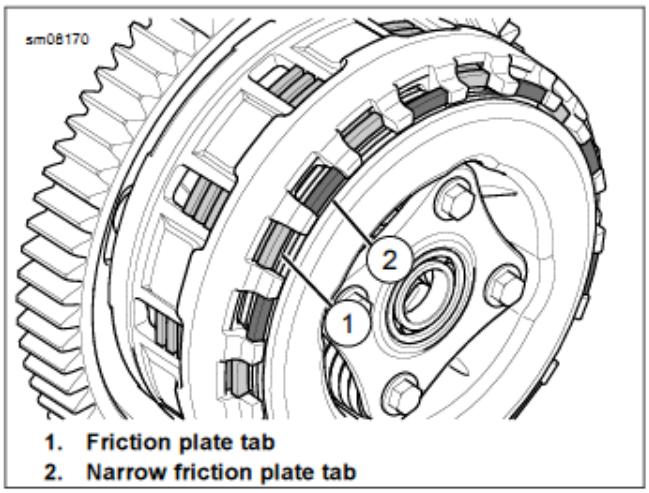

Figure 5-14. Friction Plate Tab Locations

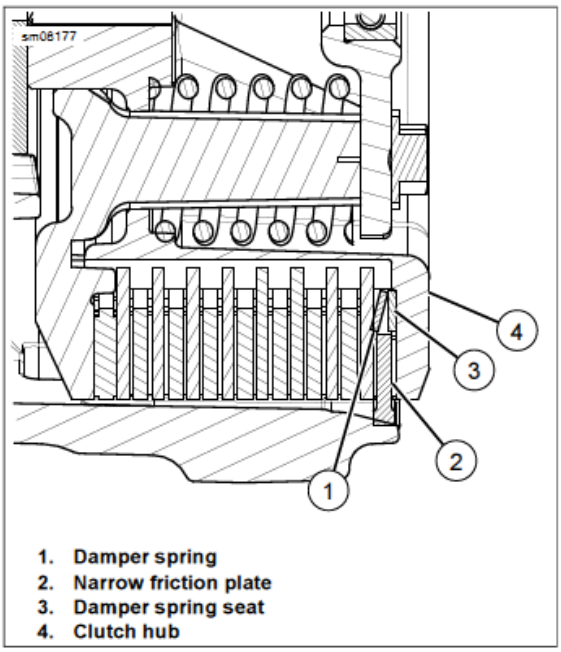

Figure 5-12. Damper Spring and Seat

CLUTCH INSTALL

1. See figure 5-10. Install thrust washer (6) with beveled side toward the engine.
2. Install Crankshaft Locking Tool. (HD-51281).
3. Install clutch (5).
4. Install CLUTCH LOCKING TOOL (HD-51505).
   a. Install cup washer (4) with concave side facing clutch.
   b. Install nut (3). Tighten to 45 ft-lbs.
   c. Remove clutch locking tool.
5. Install lifter plate (2).
   a. Install screws (1). Tighten to 35 in-lbs.
   b. Remove crank locking tool.
   c. Fill out task sheet for this section.

   STOP have facilitator check installation.

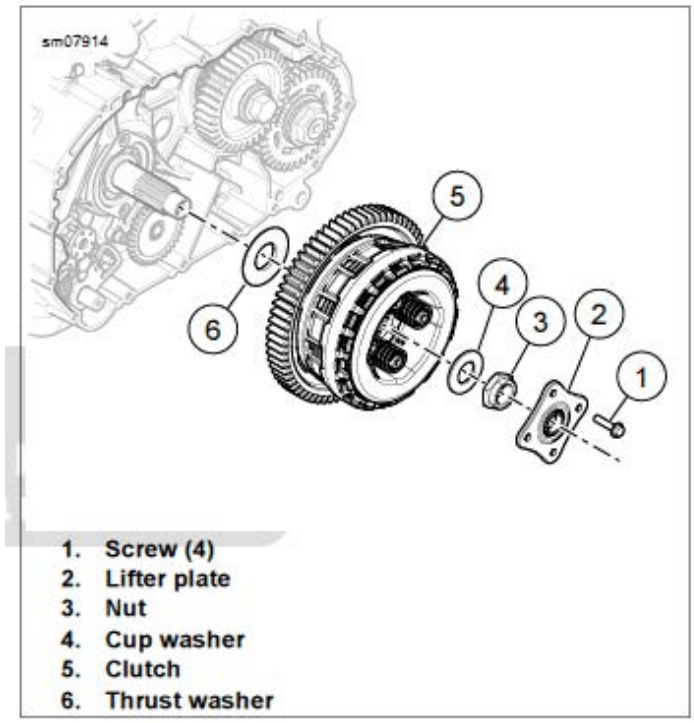

Figure 5-10. Clutch Assembly

PRIMARY COVER INSTALL

1. See figure 4-34. Install primary gasket (1).

2. See figure 4-36. Confirm installation and operation of clutch actuator.

3. See figure 4-34. install primary cover (2).

   a. See figure 4-35. Follow tightening sequence.
      See Figure 4-34 torque primary cover screws to 40 in-lbs.
   b. Fill out task sheet and give to facilitator.

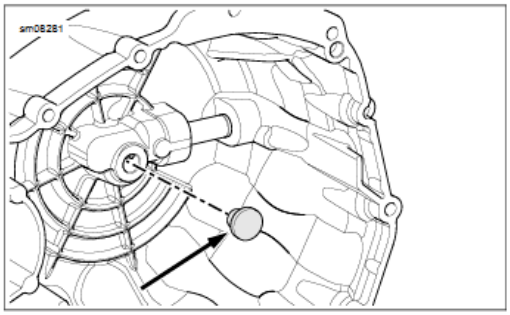

Figure 4-36. Clutch Actuator

CONGRADULATIONS YOU HAVE COMPLETED THIS TASK.

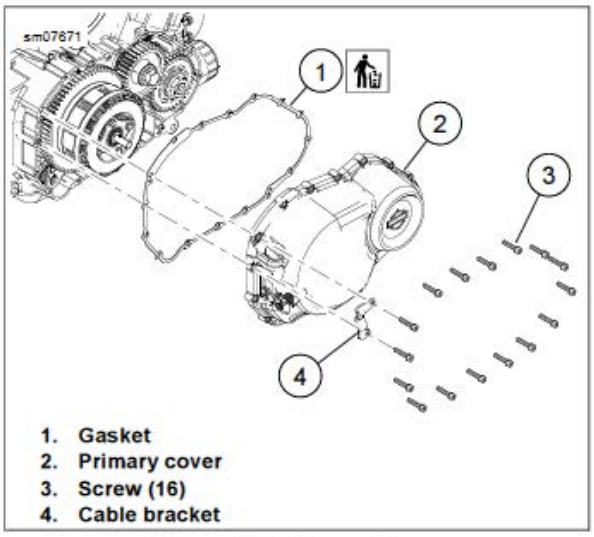

Figure 4-34. Primary Cover

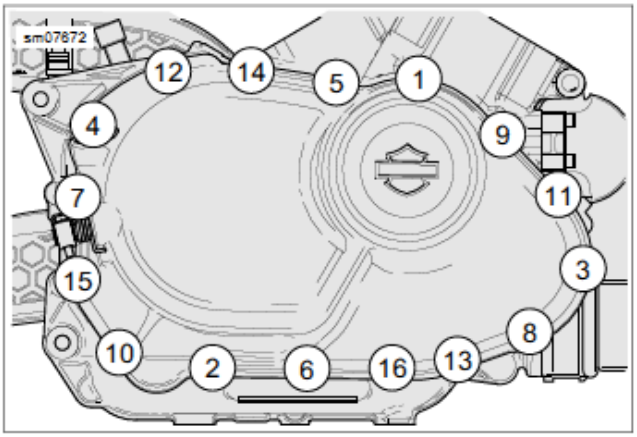

Figure 4-35. Tightening Sequence

SkillsUSA
2015 Motorcycle Service Technology
Street XG two hour task

Objective Information Sheet

350 Points
Time Limit 120 Minutes

OBJECTIVE:

Given the tools and workstation instructions, participants will correctly perform a valve adjustment on the front and rear head. Contestants will also remove, inspect and install the clutch assembly. Both tasks will be performed on the Street XG engine.

SPECIFIC SKILLS:

The contestant will:

1. Follow the instructions outlined in the station test materials to correctly perform the stated objective.
2. Use the tools and equipment properly and safely.
3. Clean and organize the work area.

The judge must re-set the station for the next participant.

SkillsUSA
2015 Motorcycle Service Technology
Street XG two hour task

Judge's Score sheet

Time Limit 120 Minutes

Contestant #: _____

Judge's Initials:_____

Start Time:_____

Stop Time:_____

Scoring Directions: The performance of each task should be either "0" or full points, i.e. "25"or "50".

Use the following criteria listed below: **"0"** indicates the contestant ***could not or did not*** correctly perform this task. **"25"or "50",** indicates the contestant **did perform or demonstrate** the skill correctly.

The judge should monitor the participant's progress to ensure safe use of the equipment.

- **PERFORMANCE:** Grade the student's performance and record the score below.
- VALVE ADJUSTMNT

1) Correctly disassembled the front and rear valve covers, remove alternator access. **(0,25)** _____
2) Correctly adjust valves (front cylinder head). **(0,50)** _____
3) Correctly adjust valves (rear cylinder head). **(0,50)** _____
4) Correctly assemble valve covers and access cover. **(0,50)** _____

- CLUTCH REMOVAL , INSPECTION, INSTALLATION

1) Correctly remove primary cover and install crank lock. **(0,25)** _____
2) Correctly remove clutch assembly measure and inspect clutch. **(0,50)** _____
3) Correct assembly of clutch assembly in clutch hub and basket. **(0,50)** _____
4) Correct installation of clutch and primary cover. **(0,50)** _____

Total Possible Score 350 points **Total points** _____

Valve Measurement can be performed by loosening both valves on Intake and Exhaust. Insert the feeler gauge from the camshaft drive side of the head through both adjusters. Adjust the valve furthest from the camshaft drive
first (see picture
below)

Adjust this valve
First.

Slide the Feeler gauge back towards the camshaft drive side of the head and adjust the other valve. (see picture below)

Adjust this
Valve second.

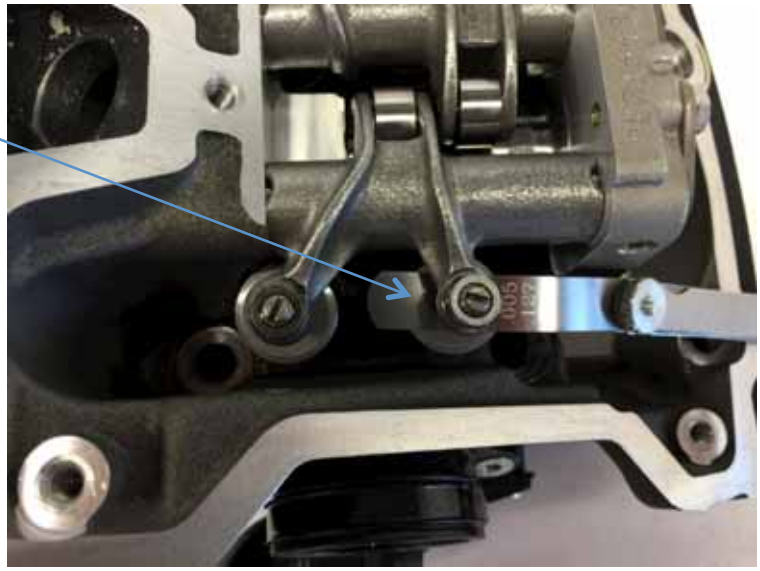

SkillsUSA
2015 Motorcycle Service Technology
Street XG Front Fork Disassembly / Reassembly

Objective Information Sheet

100 Points
Time Limit 30 Minutes

OBJECTIVE:

Given the tools, Street XG front fork assembly, and workstation instructions, participants will correctly disassemble and reassemble the front fork.

SPECIFIC SKILLS:

The contestant will:

1. Follow the instructions outlined in the station test materials to correctly perform the stated objective.
2. Use the tools and equipment properly and safely.
3. Clean and organize the work area.

The judge must re-set the station for the next participant.

SkillsUSA
2015 Motorcycle Service Technology
Street XG Front Fork Disassembly / Reassembly

Judge's Score sheet

Time Limit 30 Minutes

Contestant #_____ Start Time:_____

Judge's Initials:_____ Stop Time:_____

Scoring Directions: The performance of each task should be either **"0"** or full points **"25"**.

Use the following criteria listed below: **"0"** indicates the contestant ***could not or did not*** correctly perform this task. **"25"**indicates the contestant **did perform or demonstrate** the skill correctly.

The judge should monitor the participant's progress to ensure safe use of the equipment.

- **PERFORMANCE:** Grade the student's performance and record the score below.

1) Correctly disassembled the front fork. **(0,25)** _____
2) Correctly installed fork bushings, seals and circlip. **(0,25)** _____
3) Correctly installed fork springs and internal damping components. **(0,25)** _____
4) Completed fork reassembly. **(0,25)** _____

Total Possible Score 100 **Total Points _____**

2015 SkillsUSA
Street XG Front Fork Disassembly / Reassembly Workstation Reference Materials

DO NOT REMOVE FROM WORKSTATION

CONTESTANT INSTRUCTIONS

Follow the instructions and procedural steps that follow to complete this workstation.

Important note: Fork assemblies have been drained of all fluids for the competition. Fork components will not require fastening toques on reassembly.

Fork Disassembly

See Figure 3-39 on page #2.

1. Remove dust seal (14).
2. Remove internal circle clip (15).
3. Remove screw (23) and washer (22) from bottom of slider (20).

Δ: Caution: Use Caution when performing step #4.
Apply downward pressure while removing the fork tube cap. The fork tube cap is under a small amount of spring preload.

4. Remove fork tube cap (4).
5. Remove spring collar (6), spring washer (7), and spring (8) from slider tube (11).
6. Withdraw slider tube (11) from slider. Use the slider (20) as a slide hammer by using quick continuous strokes extending and compressing the slider (back and forth) to drive the slider upper bushing (18) out until the slider is pulled free of the slider tube (11).
7. Remove sleeve (19) from slider.
8. Remove fork seal (16), spacer (17) and upper bushing (18) from slider tube.
9. Remove damper tube (9) and rebound spring (10) from slider tube.
10. Inspect fork components for wear and damage.

STOP: Have the instructor check your work prior to reassembly.

A replacement seal will be provided by the instructor.

2015 SkillsUSA
Street XG Front Fork Disassembly / Reassembly
Workstation Reference Materials

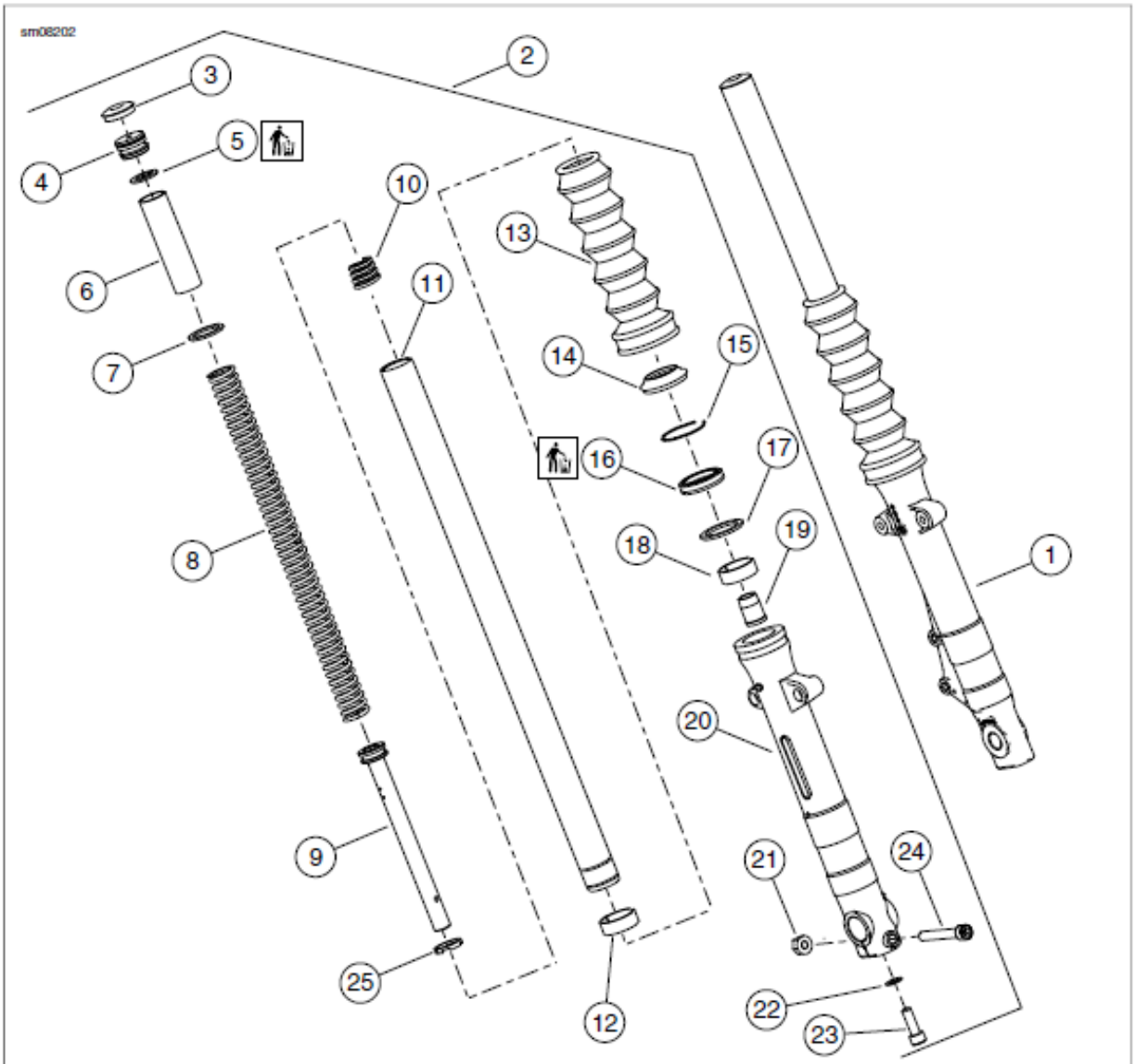

1. Left side fork leg assembly
2. Right side fork leg assembly
3. Cover
4. Fork tube cap
5. O-ring
6. Spring collar
7. Spring washer
8. Spring
9. Damper tube
10. Rebound spring
11. Slider tube
12. Lower bushing
13. Fork gaiter
14. Dust seal
15. Internal circle clip
16. Fork seal
17. Spacer
18. Upper bushing
19. Sleeve
20. Slider
21. Nut
22. Washer
23. Screw
24. Pinch bolt
25. Piston ring

Figure 3-39. Front Fork Assembly

2015 SkillsUSA
Street XG Front Fork Disassembly / Reassembly Workstation Reference Materials

Fork Reassembly

See Figure 3-39.

1. Install rebound spring (10) with tapered coils facing up on the damper tube (9).
2. Install damper tube with rebound spring into slider tube (11).
3. Insert spring (8) with tight windings down into the slider tube. Make sure to guide the damper tube through the opening at the bottom of the slider tube (11) while installing the spring (8).
4. Install sleeve (19) into damper tube (9).
5. Install slider tube into slider (20). Install screw (23) through washer (22) and into bottom of slider. Hand-tighten only.
6. Move slider tube through its full range of travel several times to verify proper component alignment.
7. Remove spring.

Refer to the "FORK SEAL AND BUSHING INSTALLATION TOOL" instruction sheet provided at the workstation.

1. Follow the bushing and seal installation steps listed in the instruction sheet.

STOP: Have the instructor check your work.

Refer back to Figure 3-39.

1. Apply HARLEY-DAVIDSON SEAL GREASE to O-ring (5) on fork tube cap (4).
2. Extend the slider tube (11) and install spring (8), spring washer (7) and spring collar (6).
3. Install fork tube cap (4) into slider tube (11).
4. Hand tighten fork tube cap.

STOP: Have the instructor check your work.

Congratulations, you have now completed the workstation.

Service Tool Instructions

BOSCH
Bosch Automotive Service Solutions
655 Eisenhower Drive
Owatonna, MN 55060
Phone 800-345-2233
Fax 586-578-7375

REV. 03-30-2014 Instruction Sheet ID: -J06008

HD-51462 FORK SEAL AND BUSHING INSTALLATION TOOL

General

See Figure 1. The FORK SEAL AND BUSHING INSTALLATION TOOL (HD-51462) is used to install the upper bushing, fork, and dust seals. This tool will work on all Street models.

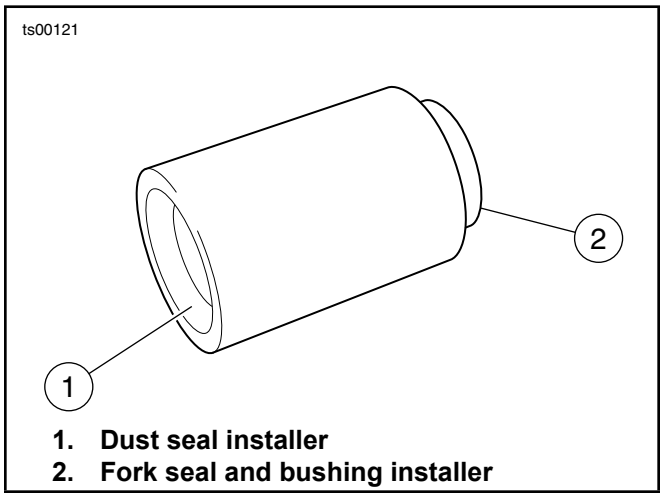

Figure 1.

Procedure

1. See Figure 2. Install the upper bushing and spacer onto the slider tube.

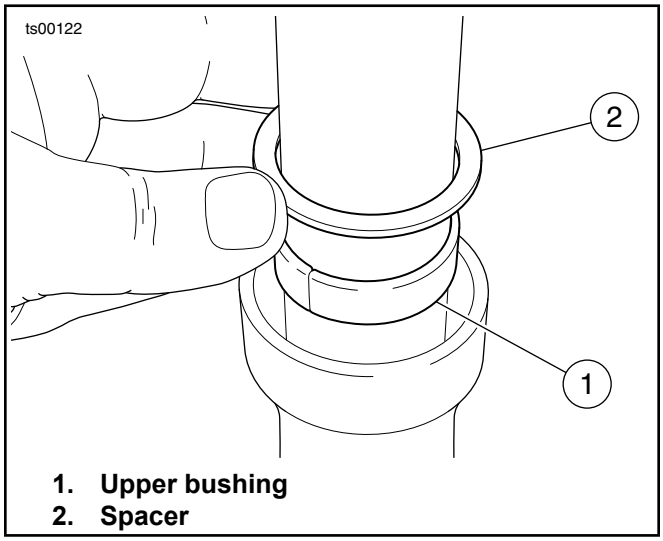

Figure 2.

2. See Figure 3. Place FORK SEAL AND BUSHING INSTALLATION TOOL (Part No. HD-51462) over slider tube with the fork seal and bushing installer side downward. Tap on spacer until bushing is fully seated.

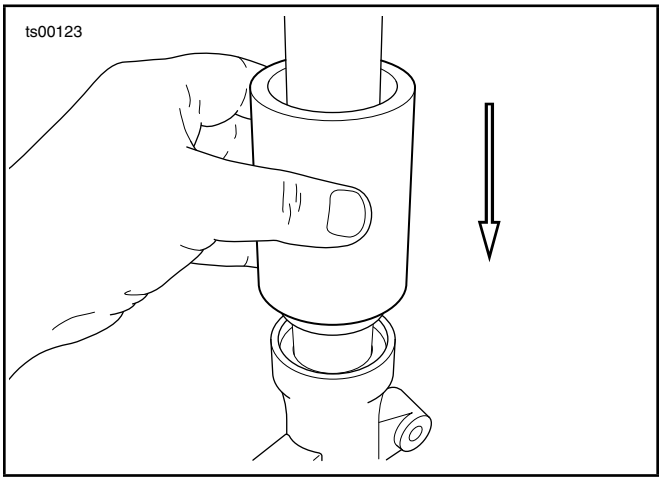

Figure 3.

3. Remove installer from slider tube.
4. See Figure 4. Coat inner diameter of new fork seal with HARLEY-DAVIDSON SEAL GREASE and install fork seal (lettering side up) over slider tube and slide it down to meet the slider.

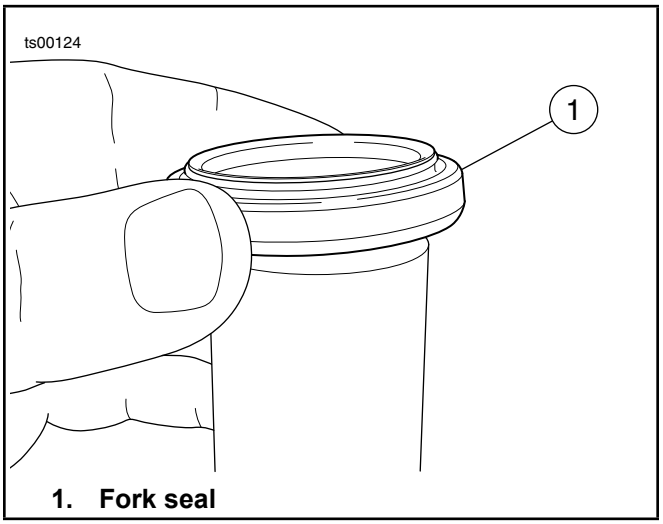

Figure 4.

5. See Figure 5. Place installation tool over slider tube with the fork seal and bushing installer side down. Tap on fork seal until the seal is fully seated.

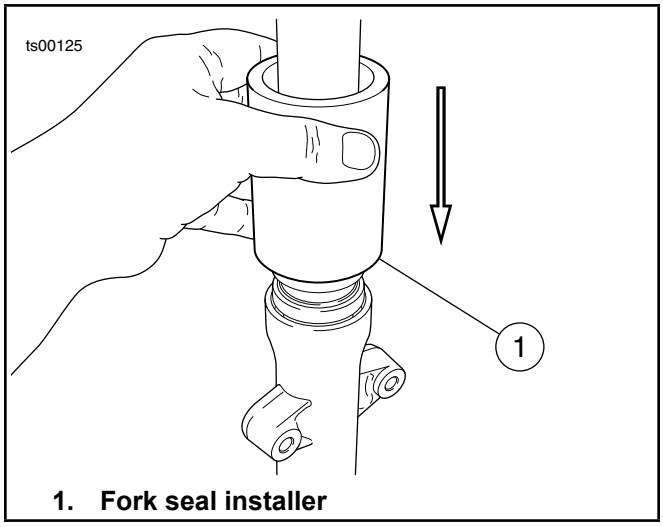

1. Fork seal installer

Figure 5.

6. Remove installer from slider tube.
7. Install internal circle clip into groove in top of slider bore.
8. See Figure 6. Install dust seal over slider tube and slide it down to meet the slider.

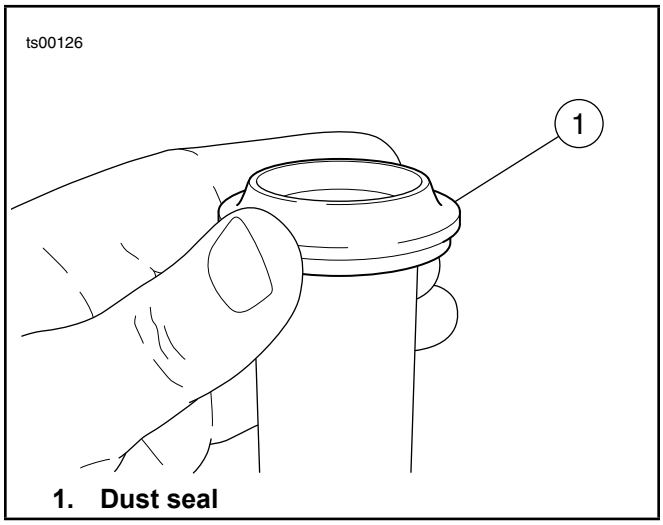

1. Dust seal

Figure 6.

9. See Figure 7. Place installation tool over slider tube with the dust seal installer side down. Tap on dust seal until the seal is fully seated.

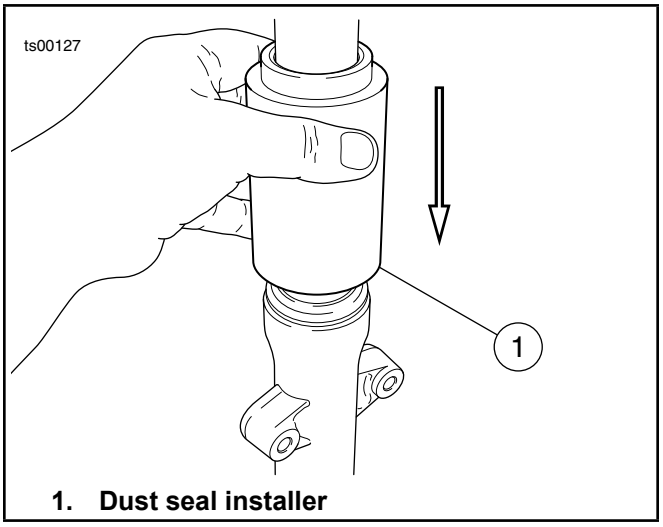

1. Dust seal installer

Figure 7.

SkillsUSA - 2015 Motorcycle Service Technology
Street XG Front Fork Workstation Set-up Instructions
Set-Up:

1. The following workstation materials and tools should be organized at each station.

Inventory per Workstation (five workstations):

Qty.	Description	Part Number	Furnished by
1	XG Fork Assembly		H-D
1	3/8” drive ratchet		H-D
1	6mm (long) Allen Socket 3/8" dr.		H-D
1	14mm Allen Socket 3/8” dr.		H-D
1	Slot head screwdriver		H-D
1	Pick		H-D
1	HD-51462 Fork Seal Driver		H-D
1	Tube of HD Seal Grease		H-D
1	Fork Seal (replacement – reuse seals per student)		H-D
1	Box of wipealls		H-D

2. Station lay-out as shown below.

HARLEY-DAVIDSON CLUTCH CABLE REPLACEMENT PROCEDURE

(½ HOUR)

Today your task is to remove and reinstall a Harley-Davidson clutch cable. You will then perform the factory clutch cable adjustment procedure. Refer to the accompanying illustrations to aid you with this project.
***REMINDER**: Read each numbered instruction thoroughly as you progress through this exercise.*

Clutch Lever and Upper Cable Removal

1. (See Figure 1) Remove clips securing clutch cable to frame downtube. (Note the exact routing of the clutch cable for later reinstallment.)
2. (See Figure 2) Slide rubber boot (1) on clutch cable adjuster (2) upward. Loosen jam nut (3) on adjuster.
3. Turn cable adjuster to **shorten** cable to **minimum** length to produce a large amount of free play at clutch lever.
4. (See Figure 3.) Remove retaining ring circlip (8) and pivot pin (7). **Discard** retaining ring circlip.
5. Remove clutch lever (2) from clutch lever bracket.
6. Remove **clutch cable pin** (5). Disconnect clutch cable.
7. (See Figure 4.) Turn adjusting screw(2) **clockwise** to remove (see Figure 5) the **nut** (4).
8. (See Figure 5.) Pull ramp assembly (5) and coupling (6) away from clutch.
9. Disassemble coupling (6) from ramp assembly. Remove clutch cable end (11) from slot in coupling.
10. Unthread the clutch cable from the primary cover by using the appropriate wrench while simultaneously turning (twisting) the **entire** clutch cable.
11. Remove the existing o-ring from the cable and discard. Install a supplied new o-ring.

Install Clutch Cable and Adjust

1. Install clutch cable into primary housing. Do not over tighten. *(It is sometimes challenging to start the threaded cable into the primary housing without cross threading. **Exercise patience** to ensure the cable is threading smoothly. The aluminum threads in the housing are easily damaged.)*
2. Attach Coupling (6) (See Figure 5) onto end of clutch cable with the "flat button" portion facing **outward**. (See Figure 4 for a more detailed view.)
3. (See Figure 5) Attach Ramp Assembly (5) to coupling (6) and install in clutch assembly.
4. Install Nut onto Adjusting Screw (8). Turn Adjusting Screw **counter clockwise** to complete the installation. Continue turning screw **counter clockwise** to take up all the slack until it **lightly** seats and back off (clockwise) **1/8 to ¼ turn**.
5. (See Figure3) Attach **upper** cable end (6) to the clutch lever(2) and install cable and lever into the clutch lever bracket (2).
6. (See Figure 3) Install Pivot Pin (7) and install new Retaining Ring. (8)
7. Turn Cable Adjuster (2) (See Figure 2) to lengthen cable to adjust clutch cable free play to **1/16 to 1/8 inch.** (See figure 6). Grasp cable and tug cable away from the clutch lever housing to observe the amount of free play (gap) between the end of the cable and the clutch lever bracket.
8. (See Figure 2) Snug jam nut (3) on cable adjuster and torque jam nut to **120 inch pounds** (10.3 – 13.6 Nm) and slide rubber boot (1) over adjuster.
9. Install clips (6) to affix cable to frame down tube. (See Figure 1)
10. Answer the questions on you're a nswer Sheet and then notify your judge when you are finished with this task and he or she will note your finishing time.

SkillsUSA

2015 Motorcycle Service Technology

XL Sportster Clutch Cable Answer Sheet

Time Limit 1/2 hr.

Contestant #_____

Start Time:_____

Judge's Initials:_____

Stop Time:_____

Answer the questions below:

5 points per question

(Please write or print legibly)

The points from this sheet will be combined with your activity points.

1. The Clutch **lever** free play specification is: _____
2. Clutch lever free play cable adjuster jam nut torque is: _____
3. After lightly seating adjuster screw, back off screw how far? _____
4. What could be the result of adjusting the clutch cable with:

(A) **Too much** lever free play? (B) **Too little** lever free play?

(A)_____

(B)_____

Total points for above answers _____

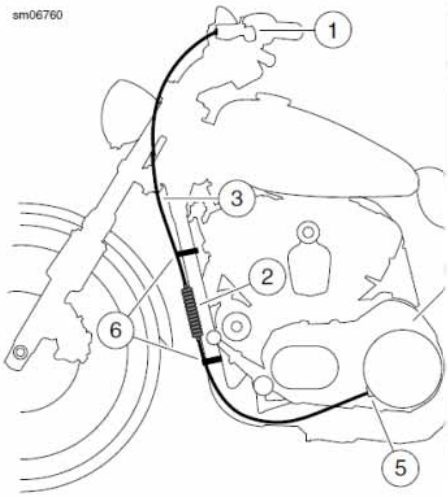

1. Clutch lever
2. Cable adjuster boot
3. Clutch cable
4. Primary cover
5. Cable end fitting
6. Clip (2)

Figure 1

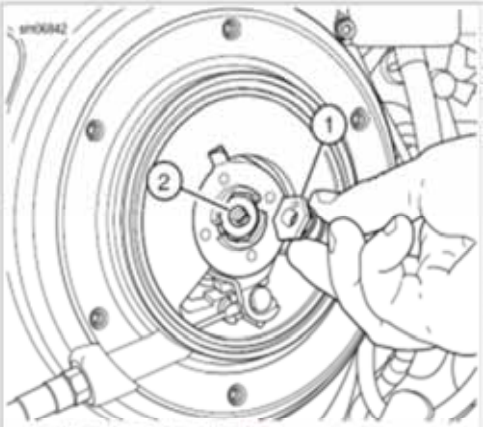

1. Hex lockplate and spring
2. Adjusting screw

Figure 4

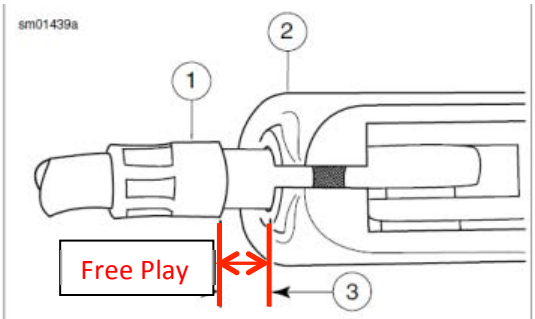

1. Clutch cable
2. Cable ferrule
3. Clutch lever bracket
4. 1/16-1/8 in (1.6-3.2 mm) free play

Figure 6

FREE PLAY	in	mm
Measurement	1/16-1/8	1.6-3.2

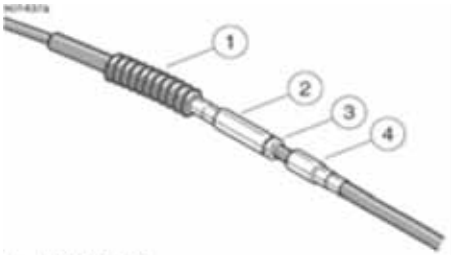

1. Rubber boot
2. Cable adjuster
3. Jamnut
4. Cable end

Figure 2

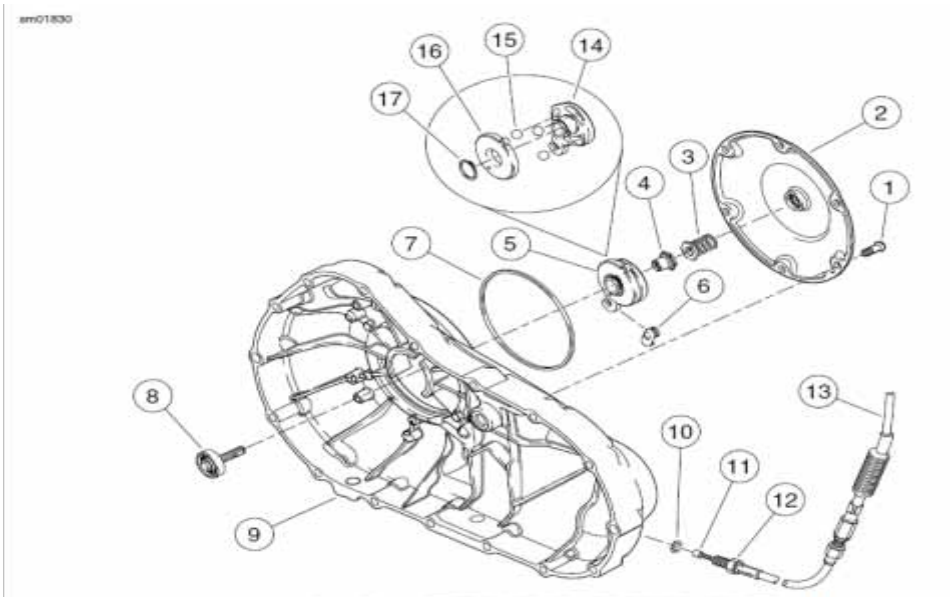

1. Screw (6)
2. Clutch inspection cover
3. Hex lockplate and spring
4. Nut
5. Ramp assembly (see items 14-17)
6. Coupling
7. Quad ring
8. Clutch adjusting screw assembly
9. Primary cover
10. O-ring
11. Clutch cable end
12. Cable end fitting
13. Clutch cable
14. Outer ramp
15. Ball (3)
16. Inner ramp
17. Retaining ring

Figure 5

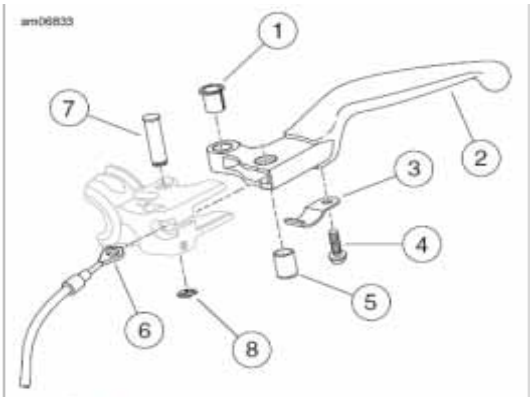

1. Bushing
2. Lever
3. Anti-rattle spring
4. Screw
5. Clutch cable pin
6. Clutch cable
7. Pivot pin
8. Retaining ring

Figure 3

SkillsUSA

2015 Motorcycle Service Technology

XL Sportster Clutch Cable Judge Score Sheet

Time Limit 30 Minutes

100 points

Contestant #:_____

Start Time:_____

Judge's Initials:_____

Stop Time:_____

Scoring Directions: The performance of each task should be either **"0"** or full points, i.e. **"5", "10" or "20".**

Use the scoring criteria listed below: **"0"** indicates the contestant ***could not or did not*** correctly perform this task.

"5,10 or 20 " indicates the contestant **did perform** the entire task or answered the question correctly.

PERFORMANCE: Grade the student's performance and record their score below.

1. Clutch **lever** free play is: ____**1/16 – 1/8 inch (1.6-3.2mm)** (**0**,**5**) pts_____
2. Clutch lever free play adjuster jam nut torque is: **120 inch/lb. (13.6 Nm**) (**0**,**5**) pts _____
3. After lightly seating adjuster screw, back off screw how far? **1/8 to ¼ turn** **(0,5)** pts _____
4. What could be the result of adjusting the clutch cable with (A) too much free play? (B) Too little free play? (Please write or print legibly)

(A)_**shifting problems** and/or **creeping, dragging** or **can't find neutral** (**0**,**5**)pts _____

(B)_____**clutch slipping**_and/or_**possible clutch failure**_____ (**0**,**5**)pts _____

Contestant removed clutch cable	(**0**,**10**) pts _____
Contestant installed clutch cable	**(0,20)** pts _____
Contestant installed new o-ring	**(0,5)** pts _____
Contestant routed and secured clutch cable properly with clips	**(0,5)** pts _____
Contestant adjusted clutch lever free play correctly	(**0**,**10**) pts _____
Contestant adjusted clutch adjustment screw correctly	(**0**,**10**) pts _____
Contestant torqued adjuster jamnut properly	(**0**,**5**) pts _____
Contestant secured clutch handle circlip securely and without distortion.	**(0,5)** pts _____
Contestant backed off torque wrench adjustment when finished.	**(0,5)** pts _____

Total Points _____

SkillsUSA

2015 Motorcycle Service Technology

XL Sportster Clutch Cable Judge Score Sheet

Time Limit 1/2 hr.

100 points

Contestant #_____

Start Time:_____

Judge's Initials:_____

Stop Time:_____

Scoring Directions:

Use the scoring criteria listed below:

"5,10 or 20 " indicates the contestant **did perform** the entire task or answered the question correctly.

PERFORMANCE: Grade the student's performance and record their score below.

1. Clutch **lever** free play is: ____**1/16 – 1/8 inch (1.6-3.2mm)** (**5**) pts_____
2. Clutch lever free play adjuster jam nut torque is: **120 inch/lb. (13.6 Nm**) (**5**) pts _____
3. After lightly seating adjuster screw, back off screw how far? **1/8 to ¼ turn** **(5)** pts _____
4. What could be the result of adjusting the clutch cable with (A) too much free play? (B) Too little free play? (Please write or print legibly)

(A)_**shifting problems** and/or **creeping, dragging** or **can't find neutral** (**5**)pts _____

(B)_____**clutch slipping** and/or **possible clutch failure**_____ (**5**)pts _____

Contestant removed clutch cable	(**10**) pts _____
Contestant installed clutch cable	**(20)** pts _____
Contestant installed new o-ring	**(5)** pts _____
Contestant routed and secured clutch cable properly with clips	**(5)** pts _____
Contestant adjusted clutch lever free play correctly	(**10**) pts _____
Contestant adjusted clutch adjustment screw correctly	(**10**) pts _____
Contestant torqued adjuster jamnut properly	(**5**) pts _____
Contestant secured clutch handle circlip securely and without distortion.	**(5)** pts _____
Contestant backed off torque wrench adjustment when finished.	**(5)** pts _____

Total Points _____

SkillsUSA

2015 Motorcycle Service Technology

XL Sportster Clutch Cable Removal and Reassembly

Time Limit ½ Hour

Objective:

R&R clutch cable : Given the tools, a Sportster® motorcycle, and workstation instructions, participants will correctly demonstrate the removal, installation, and adjustment of a Sportster® clutch cable

SkillsUSA

2015 Motorcycle Service Technology

Measurement Workstation

Time Limit 1/2 hr.

OBJECTIVE:

Given the tools and reference material participants will correctly perform the measurement of the component(s) and interpret the results to answer the questions for each section.

SPECIFIC SKILLS:

The contestant will:

1. Reference the station materials to correctly perform the assigned task.
2. Use the tools and equipment properly and safely.
3. Follow the instructions to correctly take the measurement.
4. Interpret the results and respond to the questions
5. Clean and organize the work area.

SkillsUSA

2015 Motorcycle Service Technology

Measurement Workstation Introduction

(Read this page carefully before continuing)

An essential skill needed when performing service is correctly making measurements and interpreting the results. This work station will require that you accurately take specific measurements on several components and then interpret your results using the information provided in service literature.

There are four (4) stations at this workstation. Each section will require you to make specific measurements using the provided measuring tools. Each section has related service instructions to guide you on making the measurement and the related specification needed to evaluate the results.

STATION 1

Piston Ring Inspection and Installation:

You will measure the ring end gap of a top and second compression ring in a sample cylinder and record your results. Based on your results you will determine ring condition.

After measuring the rings you will install them onto a piston and position the end gaps following manual directions.

STATION 2

You will measure a piston using a micrometer and record the results. Based on the measurement and the clearance specifications, you will calculate the corresponding cylinder size requirements.

STATION 3

Valve Spring Pressure measurement and Valve Free Travel Inspection

You will use a Spring Force Tester to measure valve spring tension. You will measure at the installed height and then calculate the height at maximum valve lift and test this pressure.

You will measure the valve free travel distance on a sample cylinder head and then use the specifications provided to determine if a specific camshaft can be used.

STATION 4

Bolt ID and measurements

Identify the diameter, threads per inch, length and head size of sample bolts.

Section 1 - Piston Ring Measurement s and Alignment
30 -Points

This section has two parts:

In part 1 you will be measuring the piston ring end gap.

In Part 2 you will be installing the piston rings and positioning them correctly for assembly.

Part 1 – 15 Points

Following the directions on the provided Instruction Sheet – Checking Piston Ring Gap, identify the ring, measure the piston ring end gaps and record you measurements.

Your measurements: Top Compression Ring . _____

Second Compression Ring . _____

Using the specifications for new components as indicated on the provided Instruction Sheet, the ring gap in the cylinder on the engine must be;

No smaller than; Top Compression Ring . _____ Second Compression Ring . _____

No larger than; Top Compression Ring . _____ Second Compression Ring . _____

Are any of your rings worn beyond replacement specifications? Yes No

Part 2 – 15 Points

Following the directions on the provided Instruction Sheet – Installing Piston Rings, correctly install and position the gaps of the provided piston rings.

You will be scored on these three points:

- Rings in the correct groove:
- Rings installed in the correct direction:
- Ring gaps positioned in the correct locations:

Section 2 – Piston Measurements 30 – Points

THE MICROMETER HAS BEEN ZEROED – NO NEED TO RECALIBRATE FOR THIS STATION

Following the directions on the provided Instruction Sheet –J01322, measure the piston and record you measurement to the fourth decimal place.

Your measurement: _____ . _____ _____ _____ _____

Using the specifications for new components as indicated on the provided Instruction Sheet – J01322, calculate the diameter cylinder on the engine. The cylinder must be;

No smaller than _____ . _____ _____ _____ _____

No larger than _____ . _____ _____ _____ _____

The cylinder / piston combination would be considered worn out if the cylinder measures larger than

_____ . _____ _____ _____ _____

Section 3 - Valve Spring Inspection 30 - Points

This section has two parts:

In part 1 you will be measuring the spring force of a valve spring set. Based on your results you will determine if the installation of the spring set will be with in specifications.

In Part 2 you will measure the clearance available for valve movement. This is known as free travel. Based on your measurement you will determine if the clearance is sufficient for the installation of a specific camshaft.

PART 1 – 15 Points

Following the directions on the provided Instruction Sheet for the Performance Valve Spring - J01991, measure the spring force and evaluate the results.

Spring pressure at installed height. _____

Recommended Maximum lift spring length. _____

Spring pressure at recommended maximum lift. _____

PART 2 – 15 Points

Following the directions on the provided Instruction Sheet -J02739, measure the valve free travel as described in step 3 and evaluate the results.

What is the Free Travel Measurement? (#4 on the instruction sheet) _____

Based on the lift specified on the instruction sheet;

What is the clearance when the valve is at maximum lift? _____

Is the clearance measured on the cylinder head acceptable if the camshaft is used? Y / N

Section 4 – Bolt Specifications 10-Points

Record the specifications in **fractional** format for each of the provided bolts.

Bolt A

What thread diameter is the bolt? _____

What is the thread specification (Threads Per Inch) for the bolt? _____

What would the length specification for the bolt be listed as? _____

What size wrench is used with the bolt? _____

Bolt B

What thread diameter is the bolt? _____

What is the thread specification (Threads Per Inch) for the bolt? _____

What would the length specification for the bolt be listed as? _____

What size wrench is used with the bolt? _____

SkillsUSA

2015 Motorcycle Service Technology

Measurement Workstation Introduction

(Read this page carefully before continuing)

An essential skill needed when performing service is correctly making measurements and interpreting the results. This work station will require that you accurately take specific measurements on several components and then interpret your results using the information provided in service literature.

There are four (4) stations at this workstation. Each section will require you to make specific measurements using the provided measuring tools. Each section has related service instructions to guide you on making the measurement and the related specification needed to evaluate the results.

STATION 1

Piston Ring Inspection and Installation:

You will measure the ring end gap of a top and second compression ring in a sample cylinder and record your results. Based on your results you will determine ring condition.

After measuring the rings you will install them onto a piston and position the end gaps following manual directions.

STATION 2

You will measure a piston using a micrometer and record the results. Based on the measurement and the clearance specifications, you will calculate the corresponding cylinder size requirements.

STATION 3

Valve Spring Pressure measurement and Valve Free Travel Inspection

You will use a Spring Force Tester to measure valve spring tension. You will measure at the installed height and then calculate the height at maximum valve lift and test this pressure.

You will measure the valve free travel distance on a sample cylinder head and then use the specifications provided to determine if a specific camshaft can be used.

STATION 4

Bolt ID and measurements

Identify the diameter, threads per inch, length and head size of two sample bolts.

Contestant #_____

Judge's Initials:_____

Start Time:_____

Stop Time:_____

SkillsUSA

2015 Motorcycle Service Technology

Measurement Workstation Score Sheet

Time Limit 1/2 hr.

Scoring Directions:

Use the scoring criteria listed below:

"0" indicates the contestant **could not or did not** correctly perform the task.

"1" "2" "5" or "10" indicates the contestant **did perform** the entire task correctly.

PERFORMANCE: Grade the student's performance and record their score below.

Section 1 - Piston Ring Measurement s and Alignment

To be considered correct both the measurement and the position at which the measurement was taken must be correct.

Was the Measurement of the Top Compression Ring correct?	**0 5**
Was the Measurement of the Second Compression Ring correct?	**0 5**
Standard minimum specifications correct?	**0 2**
Standard Maximum specifications correct?	**0 2**
Correct decision on wear limits made?	**0 1**
Rings in correct groove?	**0 5**
Rings installed in correct direction?	**0 5**
Ring Gaps positioned in the correct locations?	**0 5**

Score _____ **(30 pts possible)**

Section 2 – Piston Measurements

To be considered correct both the measurement and the position at which the measurement was taken must be correct.

Was the Measurement of the Piston correct?	**0 10**	
Standard minimum specifications correct?	**0 5**	
Standard Maximum specifications correct?	**0 5**	
Was the calculation for the cylinder size correct?	**0 10**	
Score	_____	**(30 pts possible)**

Section 3 - Valve Spring Inspection

To be correct the pressure must be measured at 1.800”

Was the spring pressure at installed height correct?	**0 5**	
Was the correct maximum spring length calculated?	**0 5**	
Was the spring pressure at maximum lift correct?	**0 5**	
Was the valve free travel measurement correct?	**0 5**	
Was the clearance calculated correctly?	**0 5**	
Was the correct decision on use of camshaft made?	**0 5**	
Score	_____	**(30 pts possible)**

Section 4 – Bolt Specifications

To be correct all four questions must be correct.

Bolt A	**0 5**	
What thread diameter is the bolt?	Y / N	
What is the thread specification (Threads Per Inch) for the bolt?	Y / N	
What would the length specification for the bolt be listed as?	Y / N	
What size wrench is used with the bolt?	Y / N	
Bolt B	**0 5**	
What thread diameter is the bolt?	Y / N	
What is the thread specification (Threads Per Inch) for the bolt?	Y / N	
What would the length specification for the bolt be listed as?	Y / N	
What size wrench is used with the bolt?	Y / N	
Score	_____	**(10 pts possible)**
Total Score	_____	**(100 pts possible)**

SCREAMIN' EAGLE 1550 TWIN CAM STROKER FORGED PISTON KIT

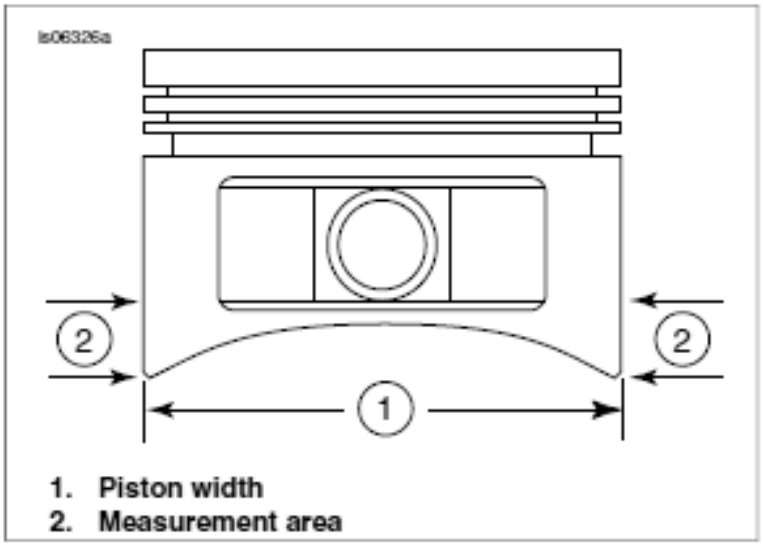

Figure 1. Piston Measurements

5. See Figure 1. Measure the piston width (1), 90 degrees horizontally from both sides of the piston pin hole and at **0.500** in. above (2), the lowest portion of the skirt. See Table 2 for piston-to-cylinder fit at this location.

Table 2. Piston Manufacturing Tolerances

Piston:	Tolerance (in.)
Fit in cylinder	0.0015-0.0025
Compression ring gap	
Top Second	0.009-0.015 0.019-0.029
Oil control rail gap	0.010-0.030

Table 3. Piston Service Wear Limits

Piston:	Wear Limit (in.)
Fit in cylinder	0.005
Compression ring gap	
Top Second	0.025 0.039
Oil control rail gap	0.030

Checking Piston Ring Gap

1. See Figure 3-62.Check ring end gap of each ring before placing on the piston. Insert the ring into the cylinder and square it in the bore 1.5 to 2 inches from the top of the bore using the top of the piston. Measure the ring end gap with a feeler gauge. Refer to Table 3-37.

NOTE

The Second Compression Ring has a DOT or (Punch Mark) near the gap the Top Compression Ring does not have any markings.

Table 3-37. Piston Ring End Gap

PISTON RING		IN	MM
Twin Cam 103	Top compression	0.012-0.022	0.305-0.559
	2nd compression	0.015-0.025	0.381-0.635

PISTON RING		REPLACE IF WEAR EXCEEDS	
		IN	MM
Ring end gap	Top compression	0.030	0.762
	2nd compression	0.034	0.864

Figure 3-62. Measuring Ring Gap

Installing Rings On Back of this page

Installing Piston Rings

1. Identify the position of the piston using the marks on the top. See Figure 3-64 and 3-63.
2. Install expansion ring (4) into third ring groove. The ends at the gap must face UP.
3. Spiral bottom oil rail (5) into space below expansion ring.
4. Spiral top oil rail (3) into space above expansion ring.

NOTES

Use the piston ring spreader to prevent excessive ring twist. Over expansion may cause the rlng to crack.

Installing the second compression ring upside down will cause oil to be scraped up into combustion chamber.

5. Using PISTON RING EXPANDER (Snap-on PRS8), carefuly install the second compression ring. Make sure the dot (punch mark) near the ring gap faces the piston crown.

6. Install the top compression ring. There is no directional marking on this ring and it can be installed with either side facing up.

7. Rotate the three piston rings in their groves. A pick can be used to rotate the rings.

8. See figure 3-64. Based on the piston location and direction, position the ring gaps as indicated.

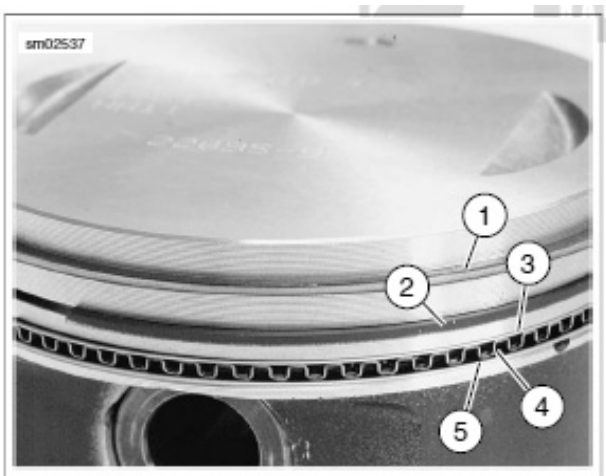

1. Top compression ring
2. Second compression ring
3. Top oil rail
4. Expansion ring
5. Bottom oil rail

Figure 3-63. Piston Rings

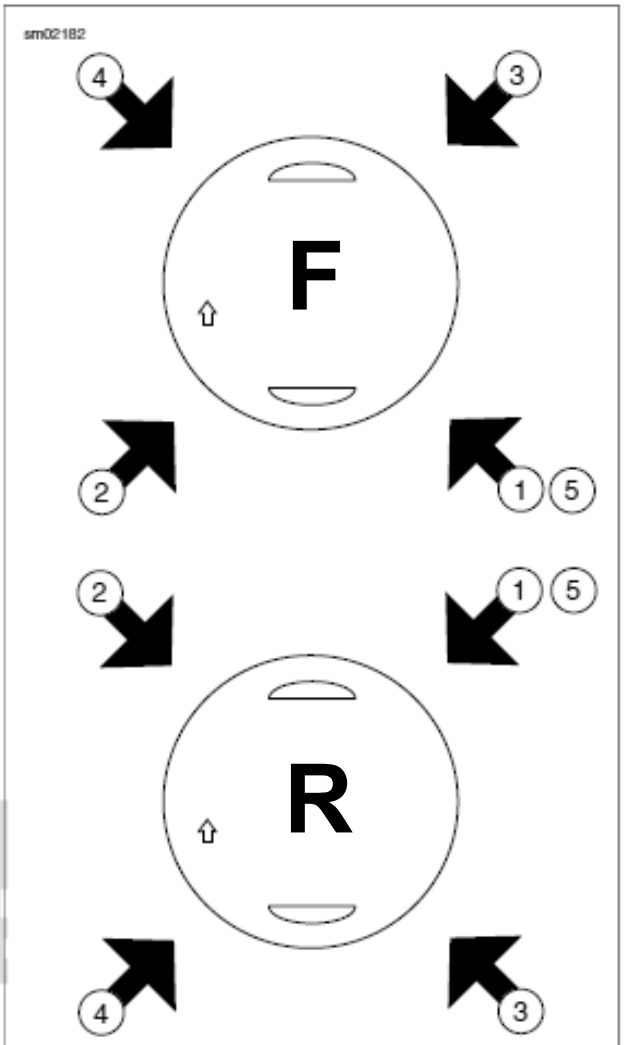

1. Expander ring
2. Bottom oil rail
3. Top oil rail
4. Second compression ring
5. Top compression ring
6. Front
7. Rear

Figure 3-64. Piston Ring Gap Alignment

Inspecting Ring Gap On Back of this page

INSTRUCTIONS

-J01991 REV. 6-14-01

Kit Number 18273-00

SCREAMIN' EAGLE PERFORMANCE VALVE SPRING KIT

Valve spring tension is critical for correct valve sealing. It is important that the spring passes inspection at two points; when the valve is closed and at maximum lift.

1. Position the valve spring set in the fixture as shown below. All springs used in the set are tested at the same time. Position the flats on the jaws as shown.

2. Compress the spring in the fixture until the spring is compressed to the installed height. Use a dial caliper to measure between the jaws as shown below.

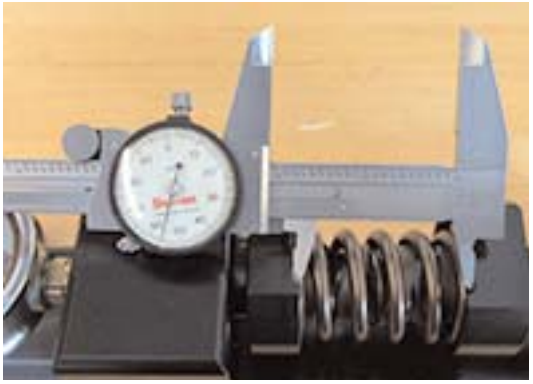

3. Compare the reading on the gage to the specification for the spring set. Check at installed height and compressed to maximum lift. Subtract the lift specification from the installed height. Spring pressures must be at or above the specification.

Spring Kit (Valve Stem Dia.)	*Force at 1.800" Installed Height*	*Recommended Max Lift*	*Spring Force at Max Lift*	*RPM Range*	*Spring Type*
18273-00 (5/16")	174	.585	448	0-6500	Double wound with dampener

INSTRUCTIONS

-J02739 REV. 07-26-04

Kit Numbers 16952-99B and 16953-99B

TWIN CAM PERFORMANCE CYLINDER HEADS

When installing performance valve train components it is important to verify that components have adiquate clearance to allow for movement. The clearance between the bottom of the valve spring collar and the top of the valve guide seal is critical for engine operation. To determine this clearance:

Measure the distance from the bottom of the spring collar to the top of the valve seal using a dial caliper.

1. Remove the valve spring.

2. Install the upper valve spring collar and the keepers as shown below.

3. Hold the valve closed and measure the distance with the caliper.

4. Compare this measurment to the lift at valve specification. It is recomended that this distance be 0.080” larger than the lift of the camshaft being used.

CAM SPECIFICATIONS

Description	Part Number	Popularity	Lift @ Valve Intake/Exhaust	Duration @ .053 Intake/Exhaust	Timing @ .053 Lift Open/Close	TDC Lift @ Valve Intake/Exhaust
SE-204 Midrange TQ	25464-06	**	.508"/.508"	236°/240°	Intake: 22° BTDC/34° ABDC Exhaust: 52° BBDC/08° ATDC	0.208"/.129"

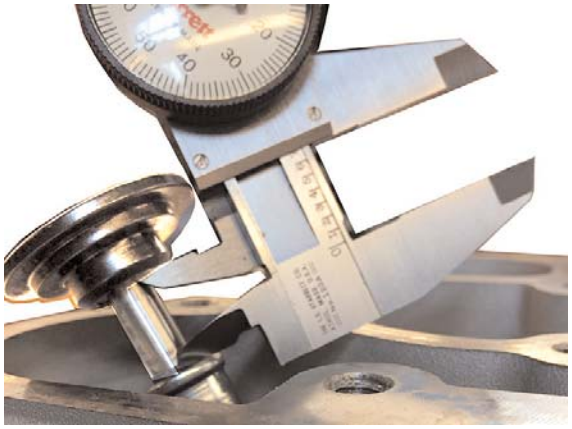

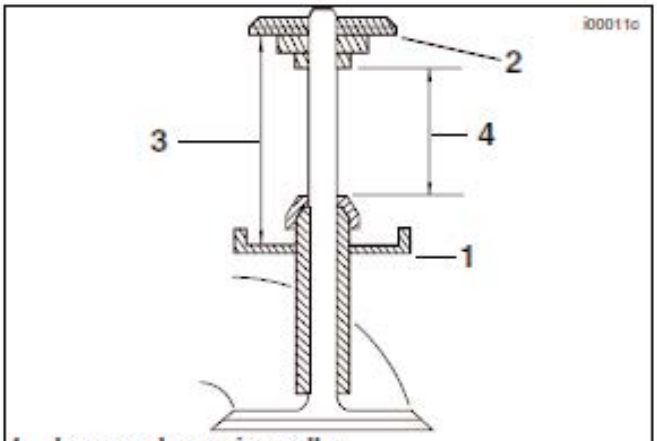

1 **Lower valve spring collar**
2 **Upper valve spring collar**
3 **Spring height** (1.800”)
4 **Free travel: .080 inch greater than valve lift**
Measured from top of seal to bottom of collar

SkillsUSA

2015 Motorcycle Service Technology

Loctite® Threadlockers: Why, When, Where & How

100 Possible Points

Time Limit 30 Minutes.

OBJECTIVE:

Given reference material the participants will correctly mark the answers to the Loctite® product questions with a highlighter.

SPECIFIC SKILLS:

The contestant will:

1. Reference the station materials to correctly perform the assigned task.
2. Use the provided highlighter to mark the correct answers to the questions.
3. Clean and organize the work area when complete.

Judges Initials:_____ Score:_____ Contestant Number: _____

Start Time: _____ End Time: _____

Loctite® Threadlockers: Why, When, Where & How

Highlight the letter of the correct answer for each question.

1. Threadlockers are available in all forms except:
   a. Liquid
   b. Solid
   c. Gas
   d. Both A and B
   e. None of the above

2. Using the Transverse Vibration Tester, which mechanical fastener holds the percent of clamp load best?
   a. Nylon Nut
   b. Bolt with Saw-Toothed Flange
   c. Toothed Lockwasher
   d. Split Ring Washer
   e. Loctite® Threadlocker

3. The lockwasher was invented in:
   a. 1903
   b. 1953
   c. 1900
   d. 1901
   e. 1899

4. Loctite® products are designed for _____applications.
   a. Metal to metal
   b. Plastic to metal
   c. Plastic to plastic
   d. Both A and C
   e. All of the above

5. Loctite® Threadlocker is to be used on:
   a. The head of the fastener
   b. The threads of the fastener
   c. The material joint
   d. The fastener and nut need the application
   e. Both B & D

6. Semisolid formulas of Loctite® products are designed for:
   a. Overhead applications
   b. Overhead, underwater, and high pressure applications
   c. Every day, overhead, and underwater applications
   d. Underwater applications
   e. All of the above

7. ODC is an abbreviation for:
   a. Oil deficient compound
   b. Ozone depleting compound
   c. Only dry compound
   d. Oil degreased clamp load
   e. Oil debris cleaner

8. When heat is applied:
   a. The fastener will contract allowing the nut to loosen easily
   b. The fastener will apply more force to the fastener
   c. The fastener will expand releasing clamp load
   d. The fastener will not expand or contract but the Loctite® will break down
   e. None of the above

9. Loctite® Threadlocker products are designed for:
   a. Metal to metal
   b. Plastic to metal
   c. Plastic to plastic
   d. Ceramic to plastic
   e. All of the above

10. Loctite® Threadlocker is designed to bond material:
    a. With pressure from the fasteners
    b. With the absence of air
    c. With pressure and force
    d. Both A and B
    e. None of the above

11. Loctite® Threadlockers are designed to control five major variables including:
    a. Adhesion, Flexibility, Sheer, Viscosity, and Cracking
    b. Flexibility, Temperature Resistance, Adhesion, Viscosity, and Cracking
    c. Adhesion, Flexibility, Sheer, Viscosity, and Temperature Resistance
    d. Viscosity, Adhesion, Flexibility, Temperature Resistance, and Strength
    e. Flexibility, Adhesion, Temperature Adaption, Viscosity, and Cracking

12. When using a mechanical locking device the technician has to be aware of the shortcomings of the fastener. Which is not a shortcoming?
    a. Mechanical locks do not seal the threads
    b. Vibration
    c. Heat
    d. Increases inventory
    e. All above are shortcomings

13. Loctite® was created in:
    a. 1956
    b. A basement
    c. A laboratory
    d. All of the above
    e. None of the above

14. Loctite® Assure™ products are designed for:
    a. Metal to metal
    b. Plastic to metal
    c. Plastic to plastic
    d. Both A and C
    e. Both B and C

15. Loctite® product is used to:
    a. Seal threads in blind holes
    b. Retain through bolts mechanically
    c. Provide lubricity
    d. Eliminate vibration
    e. None of the above

16. Loctite® makes products to:
    a. Activate inactive surfaces
    b. Penetrate corroded parts
    c. Electronically remove fasteners
    d. Both A & C
    e. Both A & B

17. Loctite® products are rated to hold clamp load:
    a. At 100% up to temperatures greater than 550 degrees F
    b. At over 90% up to temperatures above 550 degrees F
    c. At 100% up to temperatures of 550 degrees F
    d. At over 90% up to temperatures of 550 degrees F
    e. At any temperature

18. Which fastener is not intended to have Loctite® product applied to?
    a. Fine thread Fasteners
    b. Course thread fasteners
    c. Metric fasteners
    d. British fasteners
    e. None of the above

19. Loctite® threadlocker:
    a. Protects against galling
    b. Is an anaerobic sealant
    c. Has wicking abilities
    d. Is variable in viscosity
    e. All of the above

20. Early Harley-Davidson Motorcycles had _____ to change if the rider wanted to ride at highway speeds.
    a. belts
    b. pulleys
    c. tires
    d. wheels
    e. None of the above

Judges Initials:_____ Score:_____ Contestant Number: _____

Start Time: _____ End Time: _____

Loctite® Threadlockers: Why, When, Where & How

Highlight the letter of the correct answer for each question.

1. Threadlockers are available in all forms except:
   a. Liquid
   b. Solid
   c. Gas
   d. Both A and B
   e. None of the above

2. Using the Transverse Vibration Tester, which mechanical fastener holds the percent of clamp load best?
   a. Nylon Nut
   b. Bolt with Saw-Toothed Flange
   c. Toothed Lockwasher
   d. Split Ring Washer
   e. Loctite® Threadlocker

3. The lockwasher was invented in:
   a. 1903
   b. 1953
   c. 1900
   d. 1901
   e. 1899

4. Loctite® products are designed for _____applications.
   a. Metal to metal
   b. Plastic to metal
   c. Plastic to plastic
   d. Both A and C
   e. All of the above

5. Loctite® Threadlocker is to be used on:
   a. The head of the fastener
   b. The threads of the fastener
   c. The material joint
   d. The fastener and nut need the application
   e. Both B & D

6. Semisolid formulas of Loctite® products are designed for:
   a. Overhead applications
   b. Overhead, underwater, and high pressure applications
   c. Every day, overhead, and underwater applications
   d. Underwater applications
   e. All of the above

7. ODC is an abbreviation for:
   a. Oil deficient compound
   b. Ozone depleting compound
   c. Only dry compound
   d. Oil degreased clamp load
   e. Oil debris cleaner

8. When heat is applied:
   a. The fastener will contract allowing the nut to loosen easily
   b. The fastener will apply more force to the fastener
   c. The fastener will expand releasing clamp load
   d. The fastener will not expand or contract but the Loctite® will break down
   e. None of the above

9. Loctite® Threadlocker products are designed for:
   a. Metal to metal
   b. Plastic to metal
   c. Plastic to plastic
   d. Ceramic to plastic
   e. All of the above

10. Loctite® Threadlocker is designed to bond material:
    a. With pressure from the fasteners
    b. With the absence of air
    c. With pressure and force
    d. Both A and B
    e. None of the above

11. Loctite® Threadlockers are designed to control five major variables including:
    a. Adhesion, Flexibility, Sheer, Viscosity, and Cracking
    b. Flexibility, Temperature Resistance, Adhesion, Viscosity, and Cracking
    c. Adhesion, Flexibility, Sheer, Viscosity, and Temperature Resistance
    d. Viscosity, Adhesion, Flexibility, Temperature Resistance, and Strength
    e. Flexibility, Adhesion, Temperature Adaption, Viscosity, and Cracking

12. When using a mechanical locking device the technician has to be aware of the shortcomings of the fastener. Which is not a shortcoming?
    a. Mechanical locks do not seal the threads
    b. Vibration
    c. Heat
    d. Increases inventory
    e. All above are shortcomings

13. Loctite® was created in:
    a. 1956
    b. A basement
    c. A laboratory
    d. All of the above
    e. None of the above

14. Loctite® Assure™ products are designed for:
    a. Metal to metal
    b. Plastic to metal
    c. Plastic to plastic
    d. Both A and C
    e. Both B and C

15. Loctite® product is used to:
    a. Seal threads in blind holes
    b. Retain through bolts mechanically
    c. Provide lubricity
    d. Eliminate vibration
    e. None of the above

16. Loctite® makes products to:
    a. Activate inactive surfaces
    b. Penetrate corroded parts
    c. Electronically remove fasteners
    d. Both A & C
    e. Both A & B

17. Loctite® products are rated to hold clamp load:
    a. At 100% up to temperatures greater than 550 degrees F
    b. At over 90% up to temperatures above 550 degrees F
    c. At 100% up to temperatures of 550 degrees F
    d. At over 90% up to temperatures of 550 degrees F
    e. At any temperature

18. Which fastener is not intended to have Loctite® product applied to?
    a. Fine thread Fasteners
    b. Course thread fasteners
    c. Metric fasteners
    d. British fasteners
    e. None of the above

19. Loctite® threadlocker:
    a. Protects against galling
    b. Is an anaerobic sealant
    c. Has wicking abilities
    d. Is variable in viscosity
    e. All of the above

20. Early Harley-Davidson Motorcycles had _____ to change if the rider wanted to ride at highway speeds.
    a. belts
    b. pulleys
    c. tires
    d. wheels
    e. None of the above

2015 SkillsUSA Electrical Diagnostics

Contestant Number _____ Judges Initials _____ Start Time _____ End Time _____

CKP CRANKING TEST (DYNA) using the Break Out Box (B.O.B.)

Mark with an "X" the bank number used on the (B.O.B.) 78-1 X, 78-2 ____, 78-3 _____

List the (B.O.B.) pin locations for the Red meter lead 16, and the Black lead 18

Now crank motor 3 seconds recording the reading. 3.25 – 5.25 VAC, (list unit of measure) (0,10) _____
(Score)

REAR INJECTOR DRIVER TEST CRANKING TEST (DYNA) using the Break Out Box (B.O.B.)

Mark with an "X" the bank number used on the (B.O.B.) for the Red lead of the pig tail 78-1 ___, 78-2 X, 78-3 _____

List the (B.O.B.) pin locations for the Red lead of the pig tail 16,

Mark with an "X" the bank number used on the (B.O.B.) 78-1 X, 78-2 ____, 78-3

List the (B.O.B.) pin locations for the Black lead of the pig tail Black lead 6

Now crank motor 3 seconds. Did the light bulb flash? Yes X, No _____ (0,10) _____
(Score)

FRONT COIL DRIVER TEST CRANKING TEST (DYNA) using the Break Out Box (B.O.B.)

Mark with an "X" the bank number used on the (B.O.B.) for the Red lead of the pig tail 78-1 ___, 78-2 X, 78-3 _____

List the (B.O.B.) pin locations for the Red lead of the pig tail 16,

Mark with an "X" the bank number used on the (B.O.B.) 78-1 X, 78-2 ____, 78-3

List the (B.O.B.) pin locations for the Black lead of the pig tail Black lead 2

Now crank motor 3 seconds. Did the light bulb flash? Yes X, No _____ (0,10) _____
(Score)

VOLTAGE DROP OF VOLTAGE REGULATOR HARNESS USING HARNESS JUMPER (RED WIRE)

List placement of the Red meter lead Red wire on jumper / Bat +

List placement of the Black meter lead Bat + / Red wire on jumper (either connection yields same result)

Now crank motor 3 seconds recording the reading. .2-.5 VDC, (list unit of measure) (0,10) _____
(Score)

(40 points possible this page) **TOTAL** _____

TURN OVER PAGE

VOLTAGE DROP OF VOLTAGE REGULATOR HARNESS USING HARNESS JUMPER (BLACK WIRE)

List placement of the Red meter lead Black wire on jumper / Bat -

List placement of the Black meter lead Bat - / Black wire on jumper

Now crank motor 3 seconds recording the reading. .05 - .2 VDC, (list unit of measure) (0,10) _____ (Score)

VOLTAGE DROP OF BATTERY POSITIVE CABLE

List placement of the Red meter lead End of battery RED cable / Bat + (either connection produces a good reading)

List placement of the Black meter lead Bat + / End Red Cable

Now crank motor 3 seconds recording the reading. .1-.5 VDC, (list unit of measure) (0,10) _____ (Score)

VOLTAGE DROP OF BATTERY NEGATIVE CABLE

List placement of the Red meter lead Black Bat - Cable / Bat - (either connection produces a good reading)

List placement of the Black meter lead Bat - / Black Bat - Cable

Now crank motor 3 seconds recording the reading. . .1-.4 VDC, (list unit of measure) (0,10) _____ (Score)

DISCONNECT IGNITION COIL AND USE GRAY SOCKET PROBES & DVOM-IGNITION COIL TESTING

Rear coil primary resistance specification *0.3-1.5 Ohm*, Red lead (placement) *Pin A*, Black lead (placement) *Pin C*,
Primary resistance *0.3-1.5 Ohm*, (list unit of measure) (0,5) _____ (Score)

Front coil primary resistance specification *0.3-1.5 Ohm*, Red lead (placement) *Pin A*, Black lead (placement) *Pin D*,
Primary resistance *0.3-1.5 Ohm*, (list unit of measure) (0,5) _____ (Score)

ION Sense to front coil resistance spec *2500-3500 Ohms*, Red lead (placement) *Pin B*, Black lead (placement) *Front Output Tower*,
ION Sense coil resistance *2500-3500 Ohms*, (list unit of measure) (0,5) _____ (Score)

Secondary coil resistance specification *5500-7500 Ohms*, Red lead *Front Output Tower* Black lead *Rear Output Tower*,
Secondary resistance *5500-7500 Ohms*, (list unit of measure) (0,5) _____ (Score)

Coil Internal Short test Red meter lead (placement)_ *Pin A*, Black meter lead (placement) *Pin B*,
List meter reading *OL = good coil*, (list unit of measure) Did coil pass the internal short test? *Yes* (0,2) _____ (Score)

CONNECT IGNITION COIL AND USE B.O.B.

Mark with an "X" the bank number used on the (B.O.B.) 78-1 X, 78-2 ____, 78-3 _____
Rear Coil Short to ground test (B.O.B.) Red meter lead (placement) *1*, Black meter lead (placement) *BAT-*,
List meter reading *OL = good coil*, (list unit of measure) Did coil pass the internal short test? *Yes* (0,4) _____ (Score)
Mark with an "X" the bank number used on the (B.O.B.) 78-1 X, 78-2 ____, 78-3
Front Coil Short to ground test (B.O.B.) Red meter lead (placement) *2*, Black meter lead (placement) *BAT-*,
List meter reading *OL = good coil*, (list unit of measure) Did coil pass the internal short test? *Yes* (0,4) _____ (Score)

(60 points possible this page) **TOTAL** _____

(100 points possible) **TOTAL** _____

2015 SkillsUSA Electrical Diagnostics

Contestant Number _____ Judges Initials _____ Start Time _____ End Time _____

CKP CRANKING TEST (DYNA) using the Break Out Box (B.O.B.)

Mark with an "X" the bank number used on the (B.O.B.) 78-1 ____, 78-2 ____, 78-3 _____

List the (B.O.B.) pin locations for the Red meter lead ____, and the Black lead ____

Now crank motor 3 seconds recording the reading. _____, (list unit of measure) (0,10) _____
(Score)

REAR INJECTOR DRIVER TEST CRANKING TEST (DYNA) using the Break Out Box (B.O.B.)

Mark with an "X" the bank number used on the (B.O.B.) for the Red lead of the pig tail 78-1____, 78-2 ____, 78-3 _____

List the (B.O.B.) pin location for the Red lead of the pig tail _____,

Mark with an "X" the bank number used on the (B.O.B.) 78-1 _____, 78-2 ____, 78-3 _____

List the (B.O.B.) pin location for the Black lead of the pig tail Black lead _____

Now crank motor 3 seconds. Did the light bulb flash? Yes _____, No _____ (0,10) _____
(Score)

FRONT COIL DRIVER TEST CRANKING TEST (DYNA) using the Break Out Box (B.O.B.)

Mark with an "X" the bank number used on the (B.O.B.) for the Red lead of the pig tail 78-1____, 78-2 _____, 78-3 _____

List the (B.O.B.) pin location for the Red lead of the pig tail _____,

Mark with an "X" the bank number used on the (B.O.B.) 78-1 _____, 78-2 ____, 78-3 _____

List the (B.O.B.) pin location for the Black lead of the pig tail Black lead _____

Now crank motor 3 seconds. Did the light bulb flash? Yes _____, No_____ (0,10) _____
(Score)

VOLTAGE DROP OF VOLTAGE REGULATOR HARNESS USING HARNESS JUMPER (RED WIRE)

List placement of the Red meter lead _____

List placement of the Black meter lead _____

Now crank motor 3 seconds recording the reading. _____, (list unit of measure) (0,10) _____
(Score)

(40 points possible this page) **TOTAL** _____

TURN OVER PAGE

VOLTAGE DROP OF VOLTAGE REGULATOR HARNESS USING HARNESS JUMPER (BLACK WIRE)

List placement of the Red meter lead _____

List placement of the Black meter lead _____

Now crank motor 3 seconds recording the reading. _____, (list unit of measure) (0,10) _____ (Score)

VOLTAGE DROP OF BATTERY POSITIVE CABLE

List placement of the Red meter lead _____

List placement of the Black meter lead _____

Now crank motor 3 seconds recording the reading. _____, (list unit of measure) (0,10) _____ (Score)

VOLTAGE DROP OF BATTERY NEGATIVE CABLE

List placement of the Red meter lead _____

List placement of the Black meter lead _____

Now crank motor 3 seconds recording the reading. _____, (list unit of measure) (0,10) _____ (Score)

DISCONNECT IGNITION COIL AND USE GRAY SOCKET PROBES & DVOM-IGNITION COIL TESTING

Rear coil primary resistance specification _____, Red lead (placement) _____, Black lead (placement) _____,
Primary resistance _____, (list unit of measure) (0,5) _____ (Score)

Front coil primary resistance specification _____, Red lead (placement) _____, Black lead (placement) _____,
Primary resistance _____, (list unit of measure) (0,5) _____ (Score)

ION Sense to front coil resistance specification _____, Red lead (placement) _____, Black lead (placement) _____,
ION Sense coil resistance _____, (list unit of measure) (0,5) _____ (Score)

Secondary coil resistance specification _____, Red lead (placement) ____, Black lead (placement) _____,
Secondary resistance _____, (list unit of measure) (0,5) _____ (Score)

Coil Internal Short test Red meter lead (placement) _____, Black meter lead (placement) _____,
List meter reading _____, (list unit of measure) Did coil pass the internal short test? _____ (0,2) _____ (Score)

CONNECT IGNITION COIL AND USE B.O.B.

Mark with an "X" the bank number used on the (B.O.B.) 78-1 _____, 78-2 ____, 78-3 _____
Rear Coil Short to ground test (B.O.B.) Red meter lead (placement) _____, Black meter lead (placement) _____,
List meter reading _____, (list unit of measure) Did coil pass the internal short test? _____ (0,4) _____ (Score)
Yes / No

Mark with an "X" the bank number used on the (B.O.B.) 78-1 _____, 78-2 ____, 78-3 _____
Front Coil Short to ground test (B.O.B.) Red meter lead (placement) _____, Black meter lead (placement) _____,
List meter reading _____, (list unit of measure) Did coil pass the internal short test? _____ (0,4) _____ (Score)
Yes / No

(60 points possible this page) **TOTAL** _____

(100 points possible) **TOTAL** _____

From the Wiring Diagram below use the DVOM perform a cranking CKP output test.

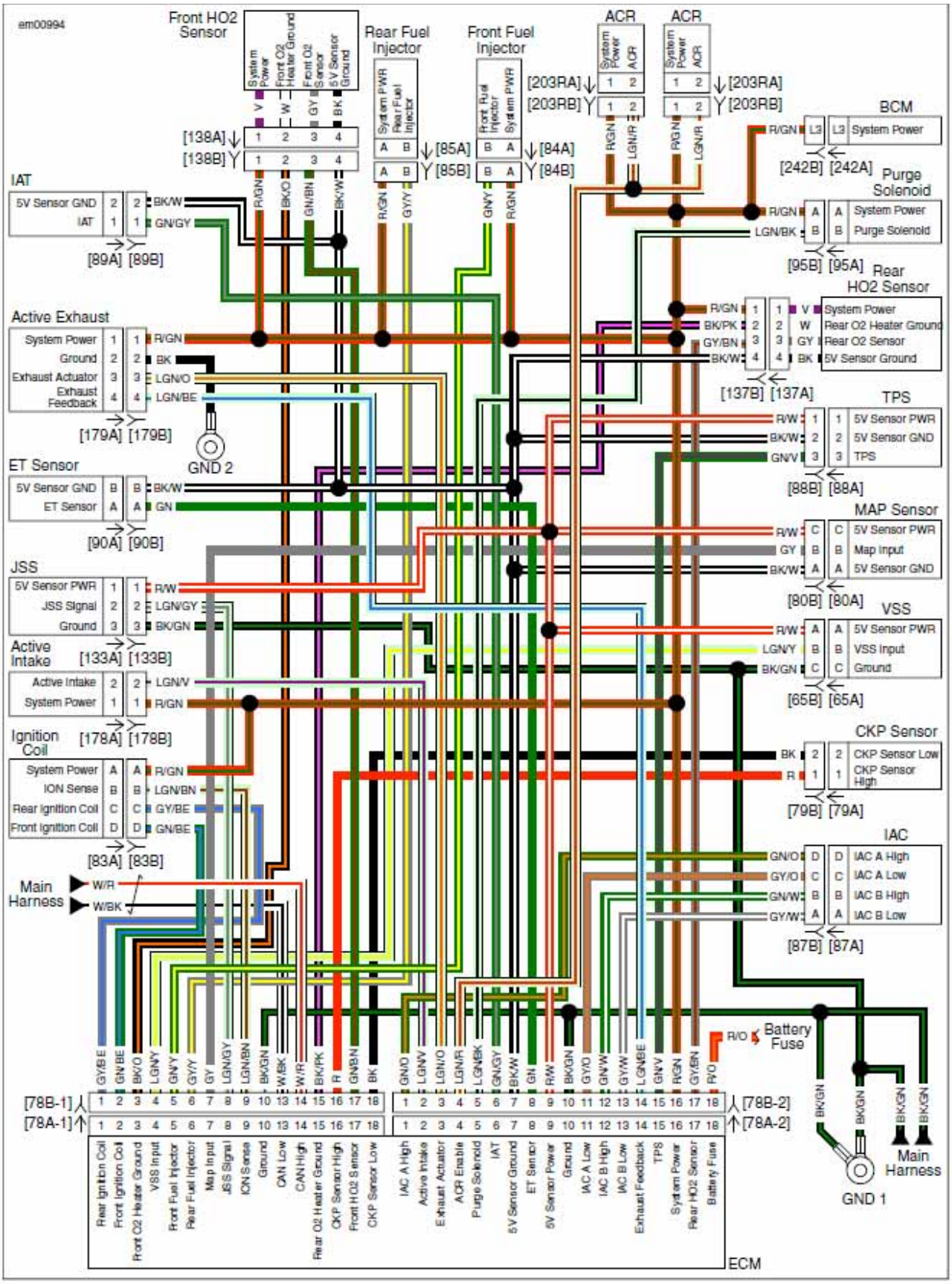

Figure 6-1. EFI Simplified Schematic

Break Out Box (B.O.B.)

We use this box between a module and its connector on the wiring harness. As the name Professional Harley-Davidson (PHD) implies, we don't take risks damaging socket terminals in the connectors that feed modules because we know the sockets are fragile. We don't want pin probes going into those socket terminals directly because of the high risk of damage that can occur.

I had a student from West Virginia describe this best telling the class one day …. "yeah, you don't want to waller them sockets out!" We all laughed with him at first, but then I got to thinking how great of a word is the word "waller". It communicates! It communicates a huge electrical principle, that being the importance of good connections! Its vital!

We use the Break Out Box (B.O.B.) to probe the various wires to check for continuity, voltage, and function. The B.O.B.'s that we will be using utilize the banana jack meter leads directly-no pin probe needed. Older B.O.B.'s needed the pink pin probe from our pin probe kit HD-41404D. With the B.O.B. between the module and the connector a technician can start and run the motorcycle.

Crank Position Sensor (CKP) output testing is easy using the B.O.B. Simply match up the Red and Black meter leads for the CKP sensor high and CKP sensor low. Set the Digital Volt Ohms Meter (DVOM) to AC Volts for this test. The CKP has a magnet with a North and South Pole inside the sensor. When the flywheel teeth pass each pole of the magnet AC voltage is generated. This is called induction. The ECM needs to see this voltage prior to allowing spark and fuel to flow. Good CKP output on a big twin Harley-Davidson motor is also very dependent on cranking speed. As you should have concluded, cranking speed is dependent on a healthy battery. With a good battery, a good CKP output on a big twin (Dynas, Softails and Touring motorcycles) should generate between 3.25-5.25 (Alternating Current Voltage) ACV. See the 'book procedure' for the CKP output test listed to the left. Cross check this by looking at the ECM wiring diagram. Remember, magnets do show fatigue over time so to know what a good reading looks like is imperative.

Test AC voltage between BOB [78-1] terminals 16 and 18.

Crank engine for 5 seconds while observing multimeter.

Is AC voltage greater than 2V?

a. **Yes.** See diagnostic tips. If MAP and IAT sensors are good, replace the ECM.

b. **No.** Replace CKP sensor.

Coil Operation

When the CKP provides an AC voltage signal to the ECM, the ECM detects the slowing down of the flywheels on each compression stroke. The ECM completes the circuit (coil driver) and energizes the primary windings of the coil for the front coil. Then the ECM opens the circuit approximately 15 degrees before front cylinder top dead center (TDC) compression. This magnetic field collapse goes over the primary windings and into the secondary windings. The primary voltage is amplified as it collapses over the secondary windings. Because the cylinder is under compression it takes about 20 to 30,000 Volts to jump the gap of the spark plug.

Driver testing (Ignition coil drivers and Injector drivers)

The coil driver and injector driver function is internal to the ECM not the ignition coil nor the injectors.
For the coil, the ECM opens and closes the circuit to pin C (Coil Rear) and pin D (Coil Front) and the ground takes place at each separate spark plug. This function of the ECM *is* the coil driver. A coil driver test is done at the B.O.B. using the injector test light (pig tail) and coil circuit test adapter light. Connect **POSITIVE** meter lead to system power and the **NEGATIVE** meter lead on each coil and injector wire (front and rear) in the B.O.B. Crank the engine. The test light should blink-showing coil/injector driver function. The fuel pump connector has been unplugged so the motor will not start. This quick cranking test is easy to complete with the B.O.B. Here is a question to think about. What would the outcome of a driver test be if the CKP was faulty? Lets talk about this more Thursday in our discussion / teaching time.

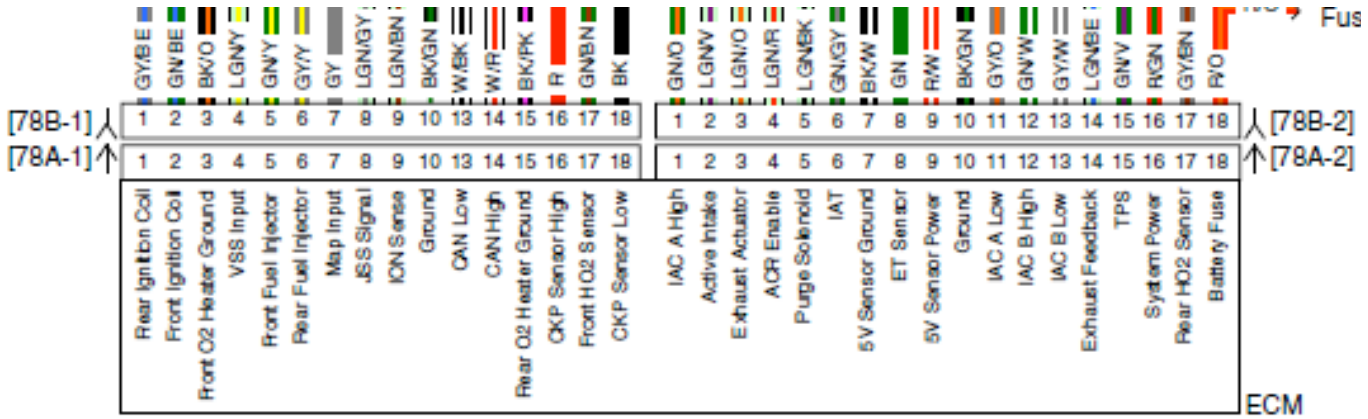

ION Sense

ION Sense is an internal knock-detector/combustion analyzer within the ECM. The secondary ignition circuit has the secondary tower out to the spark plug wires on one side and the other is the coil terminal B (ION Sense pin). This pin connects through the wiring harness to the ECM at terminal 9 (78A-1). This ION sense wire as shown from the diagram is Light Green with a Brown stripe (LGN/BN). During a spark event, 80 Volts DC is stored in a capacitor for a brief moment and then the ECM sends it through terminal 9 through the coil and out the secondary output tower to the spark plug. IONs are left over in the combustion chamber after a spark event and they are conductors of electricity. An efficient spark event leaves behind many IONS. An inefficient spark event leaves behind few IONS. The ECM measures how much current (amps) it takes for the 80 Volts DC to jump the gap of the sparkplug. If there is a high amount of resistance (few ions) the current will drop. A low amount of resistance and the current will be high. If the ECM sees on pin 9 a low current reading it will compare it with previous engine cycles to determine if detonation or a lack of combustion is present. If combustion is absent, a Diagnostic Trouble Code (DTC) is set. If knock is detected by an oscillation in voltage, the spark timing is retarded according to engine parameters. Timing can be retarded up to 13° maximum for a Big Twin independently for each cylinder. Additionally, 2002 and later ECMs richen the fuel mixture to compensate for poor combustion. If the ECM fails to detect combustion on terminal 9 at high speed and load there may be a misfire, or a lack of continuity in the ignition coil secondary circuit. Original equipment spark plugs and cables are essential as aftermarket components provide incorrect resistance values and will set these DTCs.

WHY IS VOLTAGE DROP A BETTER WAY TO TEST CIRCUITS?

An 18 gauge / 1.024mm wire has 16 strands of thin copper wire inside….how many strands are required to show continuity from one end to the other? 5...3....2.....1. Only 1 strand is needed to get a good continuity reading or

even a good battery voltage reading. When we have a substantial amount of “electrical work” to do such as start the motor, we also need high amperage. Starter amperage would burn right through a thin 18 gauge / 1.024mm wire even if it was in perfect condition because it can be as high as 200 Amps. High amounts of amps / current load going through the wrong dimension of wire will result in high amounts of heat and probably failure of the wire. Voltage doesn't show the weakness in the wire nor does resistance (continuity) but current does! Energizing current flowing through the wires is easily done by pulling the fuel pump fuse or its connector or removing the spark plug boots off the plugs and cranking the starter button for a few seconds. When the correct amount of current flows through a small filament/wire like for Thomas Edison, it illuminates. While a resistance check may show a good number in a wire, the voltage drop test alone may take what wires are left and burn them-leaving an open circuit. If it doesn’t burn the wires it may show a voltage higher than 1VDC showing the technician a poor connection. Continuity and voltage are needed, but the quality of the wires, connectors, or components is what can be determined by conducting several Voltage Drop tests around the motorcycle. A typical switch or load will have a measured drop or loss of less than 0.2 VDC. A length of wire can drop or lose up to a maximum of 0.1 VDC.

Voltage Drop Defined

Voltage drop is the measurement of consumed or lost voltage as electric current (amps) move through the wires, connectors and sensors while fully assembled and functioning. No wires, sensors or connectors can be disconnected during a voltage drop test. Another way to define voltage drop is a test that measures the difference in potential energy or the actual voltage dropped between the source (Battery) and destination (Circuit, or component). Wires, connectors and sensors are called passive elements because they do not normally supply voltage in an electrical circuit. These passive elements can be predicted to consume a certain amount of voltage. When the measured voltage drop exceeds our expected reading it may be because of loose connections, oxidized pins and sockets or compromised wiring such as something higher than1VDC. Again, any voltage drop reading higher than 1 VDC is a problem. We can voltage drop just about any section of wire or circuit, just as long as we crank the motor and keep that circuit complete -nothing disconnected. WAIT! Go back and read that last sentence one more time. Its important! Pressing the starter button / cranking the engine (3-4 seconds) = energizing the circuit. This is a must. For the SkillsUSA competition the fuel pump is unplugged and the engines will not run.

CONNECT THE METER / DIGITAL VOLT OHMS METER (DVOM)

To test positive circuits using voltage drop, **ALWAYS** connect the meter positive (RED) lead to BAT+ and the negative/common (BLACK) lead to the end of the circuit-farthest away from the battery. Energize the system (press the starter button) with the circuit complete take a reading. .1-.65 VDC are usual good positive circuit readings. To test the positive battery cable place the red meter lead on Bat+ and the black lead at the end of the cable on top of the starter case. Maintain this connection while cranking the motor and take a reading.

To test negative or ground circuits **ALWAYS** connect the meter positive (RED) lead on the battery negative post and the other lead at the end of the grounding circuit being tested. To check a ground circuit such as the negative battery cable place leads on the Bat- and the grounding stud coming out of the transmission case. With current flowing through that circuit, a cracked ground cable or a loose fastener on the battery side or the transmission case can be easily seen. Good ground circuits such as this one usually average around .03 - .2 VDC. Checking battery cables is easy by going from the appropriate battery terminal to the end of the cable while cranking the motor.

Voltage Drop Benefits

- Lower than full charge batteries do not affect Voltage Drop readings. They are still accurate at full or less than full charge can be used on lighting circuits, starters, ignition circuits, etc.

- Voltage Drop readings show the actual voltage dropped or lost/consumed when circuit is energized

- It is more accurate and will display (hard-to-find) poor connections. This tests the system as it is actually being used-with all wires, relays, components connected.

- The cost of vibration can be a high one. Large battery cables can become cracked over time under the sheathing-so cracks can't be seen. A voltage drop test will find it quickly.

NOTE:

Think opposite of a Voltage check. Start from the end of the circuit (negative side) with the negative/ common/BLACK lead and work back toward the battery (positive side) of the circuit. The positive/RED lead will always be connected to the ***BATTERY*** *while testing a circuit.*

NOTE:

Ask yourself what if my meter leads were reversed but yet in the correct positions for a voltage drop test? Does a negative voltage drop test communicate the same information to you as a positive one? Sure it does! Don't let simple polarity be confusing. Time spent with the DVOM around the motorcycle will grow confidence and efficiency when diagnosing. Get comfortable with voltage drop!

Ignition Coil Bench Testing **Record Readings in OHMS Ω scale not kOhms**

- Primary resistance checks can be performed on the bench measuring resistance from the Power pin (terminal A) to each ignition coil pin (C and D). Study the image below to be efficient during the competition. See specifications listed below.

- ION Sense coil resistance specification is 2500-3500 Ω (ohms). This bench test is performed measuring the ION Sense pin to each tower of the ignition coil (front and rear). Remove each spark plug wire from the coil which are connected to the secondary towers (note arrow). Remember to cycle the range button on your meter observing what scale the meter is reading. 2.5 kilo ohms is the same as 2500 ohms. Your answer here needs to be in ohms not k Ohms. You may write the Omega symbol (Ω) for the unit of measure instead of the word ohms for any resistance question.

- Secondary ignition coil resistance checks can be done without removing the coil or using the B.O.B. Simply connect one meter lead to the secondary front tower and the other to the **secondary rear** tower and record your reading. See specifications listed below.
  The coil is marked "F" and "R" for front and rear.

- Internal shorts can be checked from the power pin to the ION sense pin. This test can be done best on the bench checking resistance across those two pins. The DVOM should read OL or no resistance.

- Lastly, each coil pin (front and rear) can be checked for shorts to ground. For this test the B.O.B. makes it easy. What is the best ground on the motorcycle? The battery – post of course! Using the B.O.B. check resistance of the front and rear coil pins to ground. Meter must be in the OHMS scale. There should be no continuity or (OL) on the meter.

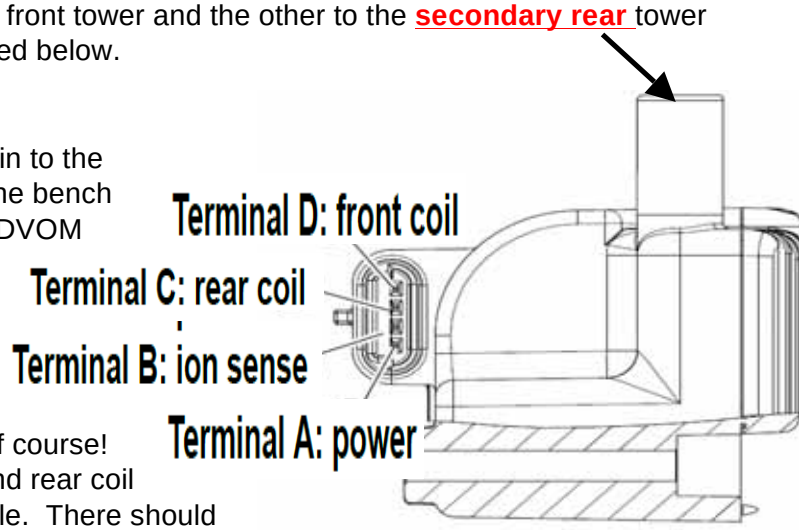

Table 1-6. Ignition Coil Specifications

WINDING	RESISTANCE
Ignition coil primary resistance at room temperature	0.3-1.5 Ohm
Ignition coil secondary resistance at room temperature	5500-7500 Ohms

CONFIDENTIAL

SkillsUSA
2015 Motorcycle Service Technology Contest

Written Test

Motorcycle Electrical Basics

50 Possible Points

Time Limit 30 Minutes

Sponsored by:

MOTORCYCLE MECHANICS INSTITUTE

A DIVISION OF UNIVERSAL TECHNICAL INSTITUTE

SkillsUSA
2015 Motorcycle Service Technology Contest
Motorcycle Electrical Basics

Objective: This written test allows the participant to demonstrate their knowledge of motorcycle electrical basics

Directions: Select the best answer for each question and write in the selected letter on the answer sheet provided.

1. Voltage is defined as :

   A. Electrical pressure
   B. Electrical current flow
   C. Opposition to current flow
   D. Electrical power

2. Amperage is defined as :

   A. Electrical pressure
   B. Electrical current flow
   C. Opposition to current flow
   D. Electrical power

3. Wattage is defined as :

   A. Electrical pressure
   B. Electrical current flow
   C. Opposition to current flow
   D. Electrical power

4. Resistance is defined as :

   A. Electrical pressure
   B. Electrical current flow
   C. Opposition to current flow
   D. Electrical power

5. Given a wire of constant gauge, how will the resistance of the wire be affected by length?

   A. Resistance will increase as length increases
   B. Resistance will increase as length decreases
   C. Wires do not hold resistance
   D. Resistance is not affected by length

6. Given a 16 AWG wire, an 8 AWG wire of the same length in comparison will be :

   A. Smaller diameter and of less resistance
   B. Larger in diameter and of higher resistance
   C. Smaller in diameter and the same resistance as wires do not hold resistance
   D. Larger in diameter and of less resistance

7. The four essential parts of a circuit are :

   A. Battery, relay, kill switch, headlight
   B. Key, inverter, solenoid, ground
   C. Source, path, load, control
   D. Key, wires, start button, ground

8. In a series circuit, if one load fails how are the rest of the loads affected?

   A. They are not affected, the remaining loads function normally
   B. All loads in the circuit no longer operate
   C. Series circuits only have one load
   D. They all become 2 times stronger

9. In a parallel circuit, if one load fails how are the rest of the loads affected?

   A. They are not affected, the remaining loads function normally
   B. All loads in the circuit no longer operate
   C. Series circuits only have one load
   D. They all become 2 times stronger

10. A short is defined as :

   A. An unwanted path to ground before the load
   B. An unwanted path to the load from the switch
   C. Any electrical failure
   D. An incomplete path anywhere in the circuit

11. An open is defined as :

    A. An unwanted path to ground before the load
    B. An unwanted path to the load from the switch
    C. A break only in the power side of the circuit
    D. An incomplete path anywhere in the circuit

12. The two different types of electrical current used on a motorcycle are :

    A. Anode/Cathode
    B. AC/DC
    C. Emitter/Base
    D. Electron/Proton

13. The process by which we create electricity with a motorcycle charging system is known as :

    A. Convection
    B. Osmosis
    C. Sulfation
    D. Induction

14. The voltage producing coil of wire in a motorcycle charging system is known as the :

    A. Tesla coil
    B. FM coil
    C. Stator coil
    D. Pulser coil

15. The device used to convert the AC created in the charging system into storable DC is the :

    A. Regulator
    B. Oscillator
    C. Rectifier
    D. Potentiometer

Use Watts Law (Watts = Volts x Amps) and Ohms Law (Volts = Amps x Ohms) to answer the following questions (16 – 18)

16. A 12 Volt 160 Watt headlight bulb will draw how much current?

    A. 13.3 Amps
    B. 13.3 Ohms
    C. .075 Amps
    D. Not enough information to calculate the answer

17. How much resistance would the headlight bulb in question 16 be?
    A. 9 Watts
    B. 9 Ohms
    C. .9 Ohms
    D. Not enough information to calculate the answer

18. How many Watts would the bulb in question 16 be if it were rated at .5 Ohms?
    A. 160 Watts
    B. 288 Watts
    C. 72 Watts
    D. .5 Watts

19. One _____ will push one _____ through one _____.
    A. Amp, Ohm, Watt
    B. Volt, Amp, Ohm
    C. Watt, Volt, Amp
    D. Ohm, Amp, Volt

20. In a 12 Volt parallel circuit containing two loads, each load must be able to consume _____ Volts.
    A. 12
    B. 6
    C. 3
    D. Not enough information to calculate the answer

SkillsUSA
2015 Motorcycle Service Technology Contest

Written Test

Motorcycle Electrical Basics

50 Possible Points

Time Limit 30 Minutes

Sponsored by:

MOTORCYCLE MECHANICS INSTITUTE

A DIVISION OF UNIVERSAL TECHNICAL INSTITUTE

SkillsUSA
2015 Motorcycle Service Technology Contest
Motorcycle Electrical Basics

Objective: This written test allows the participant to demonstrate their knowledge of motorcycle electrical basics

Directions: Select the best answer for each question and write in the selected letter on the answer sheet provided.

1. Voltage is defined as :

   A. Electrical pressure
   B. Electrical current flow
   C. Opposition to current flow
   D. Electrical power

2. Amperage is defined as :

   A. Electrical pressure
   B. Electrical current flow
   C. Opposition to current flow
   D. Electrical power

3. Wattage is defined as :

   A. Electrical pressure
   B. Electrical current flow
   C. Opposition to current flow
   D. Electrical power

4. Resistance is defined as :

   A. Electrical pressure
   B. Electrical current flow
   C. Opposition to current flow
   D. Electrical power

5. Given a wire of constant gauge, how will the resistance of the wire be affected by length?

   A. Resistance will increase as length increases
   B. Resistance will increase as length decreases
   C. Wires do not hold resistance
   D. Resistance is not affected by length

6. Given a 16 AWG wire, an 8 AWG wire of the same length in comparison will be :

   A. Smaller diameter and of less resistance
   B. Larger in diameter and of higher resistance
   C. Smaller in diameter and the same resistance as wires do not hold resistance
   D. Larger in diameter and of less resistance

7. The four essential parts of a circuit are :

   A. Battery, relay, kill switch, headlight
   B. Key, inverter, solenoid, ground
   C. Source, path, load, control
   D. Key, wires, start button, ground

8. In a series circuit, if one load fails how are the rest of the loads affected?

   A. They are not affected, the remaining loads function normally
   B. All loads in the circuit no longer operate
   C. Series circuits only have one load
   D. They all become 2 times stronger

9. In a parallel circuit, if one load fails how are the rest of the loads affected?

   A. They are not affected, the remaining loads function normally
   B. All loads in the circuit no longer operate
   C. Series circuits only have one load
   D. They all become 2 times stronger

10. A short is defined as :

   A. An unwanted path to ground before the load
   B. An unwanted path to the load from the switch
   C. Any electrical failure
   D. An incomplete path anywhere in the circuit

11. An open is defined as :

A. An unwanted path to ground before the load
B. An unwanted path to the load from the switch
C. A break only in the power side of the circuit
D. An incomplete path anywhere in the circuit

12. The two different types of electrical current used on a motorcycle are :

A. Anode/Cathode
B. AC/DC
C. Emitter/Base
D. Electron/Proton

13. The process by which we create electricity with a motorcycle charging system is known as :

A. Convection
B. Osmosis
C. Sulfation
D. Induction

14. The voltage producing coil of wire in a motorcycle charging system is known as the :

A. Tesla coil
B. FM coil
C. Stator coil
D. Pulser coil

15. The device used to convert the AC created in the charging system into storable DC is the :

A. Regulator
B. Oscillator
C. Rectifier
D. Potentiometer

Use Watts Law (Watts = Volts x Amps) and Ohms Law (Volts = Amps x Ohms) to answer the following questions (16 – 18)

16. A 12 Volt 160 Watt headlight bulb will draw how much current?

A. 13.3 Amps
B. 13.3 Ohms
C. .075 Amps
D. Not enough information to calculate the answer

17. How much resistance would the headlight bulb in question 16 be?
    A. 9 Watts
    B. 9 Ohms
    C. .9 Ohms
    D. Not enough information to calculate the answer

18. How many Watts would the bulb in question 16 be if it were rated at .5 Ohms?
    A. 160 Watts
    B. 288 Watts
    C. 72 Watts
    D. .5 Watts

19. One _____ will push one _____ through one _____.
    A. Amp, Ohm, Watt
    B. Volt, Amp, Ohm
    C. Watt, Volt, Amp
    D. Ohm, Amp, Volt

20. In a 12 Volt parallel circuit containing two loads, each load must be able to consume _____ Volts.
    A. 12
    B. 6
    C. 3
    D. Not enough information to calculate the answer

CONFIDENTIAL

SkillsUSA
2015 Motorcycle Service Technology Contest

Written Test Answer Key

Motorcycle Electrical Basics

Sponsored by:

MOTORCYCLE MECHANICS INSTITUTE
A DIVISION OF UNIVERSAL TECHNICAL INSTITUTE

SkillsUSA
2015 Motorcycle Service Technology Contest
Written Test
Motorcycle Electrical Basics

Each question 2.5pts each total possible of 50 points

1. ___A____
2. ___B____
3. ___D_____
4. ___C_____
5. ___A_____
6. ___D_____
7. ___C_____
8. ___B_____
9. ___A_____
10. __A_____
11. __D_____
12. __B_____
13. __D____
14. __C____
15. __C____
16. __A_____
17. __C____
18. __B____
19. __B_____
20. __A_____

SCORE : Number correct x 2.5pts each
(50pts possible)

SkillsUSA
2015 Motorcycle Service Technology Contest

Written Test Answer Sheet

Motorcycle Electrical Basics

Sponsored by:

MOTORCYCLE MECHANICS INSTITUTE
A DIVISION OF UNIVERSAL TECHNICAL INSTITUTE

SkillsUSA
2015 Motorcycle Service Technology Contest
Written Test
Motorcycle Electrical Basics

CONTESTANT # _____

1. _____
2. _____
3. _____
4. _____
5. _____
6. _____
7. _____
8. _____
9. _____
10. _____
11. _____
12. _____
13. _____
14. _____
15. _____
16. _____
17. _____
18. _____
19. _____
20. _____

SCORE _____

SkillsUSA
2015 Motorcycle Service Technology Contest

360° Safety Inspection Introduction

- Read these pages carefully before continuing -

Sponsored by:

MOTORCYCLE MECHANICS INSTITUTE
A DIVISION OF UNIVERSAL TECHNICAL INSTITUTE

SkillsUSA
2015 Motorcycle Service Technology Contest

One of the most important skills needed as a motorcycle service technician is the ability to notice and effectively communicate safety related issues found with a customer's vehicle. This helps the dealership to sell work, current and future, and most importantly keeps our customers safe and riding.

To make this process as efficient and accurate as possible many OEMs have a standard practice such as the 360° Walk-a-round method of safety inspection.

This process breaks the inspection down into 6 key inspection areas.

Moving in counter-clockwise direction from rider position:

1. Left Front
    - Includes but not limited to
        - Handlebars : Bent, tight, grip condition
        - Clutch lever and cable : Operation, condition, free-play
        - Headlight : Beams, alignment, secured
        - Turn signals : Operation, lens condition, secured
        - Horn : Operation, secured
        - Instruments : Operation, secured
        - Steering : Smooth, tight
        - Tire : Pressure, wear, direction, valve stem
        - F. Wheel : Bends, loose weights, bearings, spokes, axle tight, pinch bolts tight
        - F. Suspension : Operation, secured, fork height, seals
2. Left Center
    - Includes but not limited to
        - Side Stand/Center Stand : Smooth, bent, spring
        - Foot pegs/floor boards : Secured, bent, springs
        - Shift lever : Secured, bent, smooth, seal
3. Left Rear
    - Includes but not limited to
        - Tire : Pressure, wear, direction, valve stem

(3. Left Rear continued)

- R. Wheel : Bends, loose weights, bearings, spokes, axle tight, pinch bolts tight, axle alignment
- Brake stay (if on the L side) : tight, secured, cotter pin/e-clip
- Rear suspension : Operation, secured, bearings, equal adjustments, leaks, swing arm movement
- Passenger backrest : Tight, secure

4. Right Rear
   - Incudes but not limited to
     - Brake stay (if on the R side) : tight, secured, cotter pin/e-clip
     - R. Brakes : Operation, fluid level, hose routing, hose condition, shoe or pad wear, disc condition, free-play
     - Tail and brake lights : Operation, lenses, secured
     - Exhaust system : Secured, rust, holes, leaks
5. Right Center
   - Includes but not limited to
     - Kick start lever (if applicable) : Secured, operation, positioning
     - Frame : Bent, fork stops, battery damage
     - Seat : Secured, condition
     - Fuel system : Leaks, hose condition, hose routing, petcocks, vent hoses
     - Engine oil leaks
6. Right Front
   - Includes but not limited to
     - Throttle : Operation, cable routing, return smoothly, free-play, grip housing
     - F. Brakes : Operation, fluid level, hose routing, hose condition, shoe or pad wear, disc condition, free-play
     - Mirrors : Secure, broken
     - Fairing/windscreen : Secure, cracks, clarity, cleanliness

Follow this process when completing the 360 ° safety inspection work station!

SkillsUSA
2015 Motorcycle Service Technology Contest

360° Safety Inspection Judge's Sheet

50 Possible Points

Time Limit 30 Minutes

Sponsored by:

MOTORCYCLE MECHANICS INSTITUTE

A DIVISION OF UNIVERSAL TECHNICAL INSTITUTE

SkillsUSA
2015 Motorcycle Service Technology Contest

Objective: This workstation is designed to allow the contestant to show their ability to locate and effectively communicate, by recording onto a document, safety related concerns with a modern day motorcycle

Directions: Contestants have 30 minutes to read supplied support material, inspect a "bugged" motorcycle and properly identify 10 safety related issues. ***DO NOT CORRECT ANY ISSUES FOUND!!*** Proper terminology is required to receive credit for an answer. No disassembly of the vehicle will be required to successfully complete this task.

Contestant # _____

Judge's Initials : _____

Scoring Directions: After collected, use the supplied **Key Sheet** to check answers. Each of the 10 "bugs" are either **0** or full points **5.** Correct terminology is required, i.e. "the bolt that holds the brake on is loose" would NOT be acceptable. The bugs are numbered 1 – 10 and listed as what area they are in (i.e. #1- Loose Front Axle Nut -A1), contestants must list each bug in the correct area or it is **0.** Circle any bugs that were located and identified correctly on the chart at the bottom of the page. (i.e. contestant got bug #3 correct, circle #3 at the bottom of the page) Contestants are NOT penalized for incorrect answers, they can list as much as they like in the given amount of time.

1 2 3 4 5 6 7 8 9 10

Amount correct : _____

x5 Points each : _____

SCORE : _____

Judge attach this score sheet to the contestant answer sheet

CONFIDENTIAL

SkillsUSA
2015 Motorcycle Service Technology Contest

360° Safety Inspection Key Sheet

50 Possible Points

Time Limit 30 Minutes

Sponsored by:

MOTORCYCLE MECHANICS INSTITUTE
A DIVISION OF UNIVERSAL TECHNICAL INSTITUTE

SkillsUSA
2015 Motorcycle Service Technology Contest

Objective: This workstation is designed to allow the contestant to show their ability to locate and effectively communicate, by recording onto a document, safety related concerns with a modern day motorcycle

Directions: Contestants have 30 minutes to read supplied support material, inspect a "bugged" motorcycle and properly identify 10 safety related issues. ***DO NOT CORRECT ANY ISSUES FOUND!!*** Proper terminology is required to receive credit for an answer. No disassembly of the vehicle will be required to successfully complete this task.

Scoring Directions: After collected, use the supplied **Key Sheet** to check answers. Each of the 10 "bugs" are either **0** or full points **5.** Correct terminology is required, i.e. "the bolt that holds the brake on is loose" would NOT be acceptable. The bugs are numbered 1 – 10 and listed as what area they are in (i.e. #1- Loose Front Axle Nut -A1), contestants must list each bug in the correct area or it is **0.** Circle any bugs that were located and identified correctly on the chart at the bottom of the page. (i.e. contestant got bug #3 correct, circle #3 at the bottom of the page) Contestants are NOT penalized for incorrect answers, they can list as much as they like in the given amount of time.

1) Front axle pinch bolt loose – A1

2) Front right handlebar mounting/pinch bolt loose – A1

3) Left upper triple tree pinch bolt loose – A1

4) Left foot peg snap-ring missing – A2

5) Rear shocks set at different settings – A3

6) Right side belt adjuster nut loose – A3

7) Rear brake hose routing bracket missing bolt – A4

8) Rear brake pedal pinch bolt/nut loose – A4

9) Incorrectly mounted seat – A5

10) Right side speedscreen/fairing/etc. mounting fastener missing – A6

SkillsUSA
2015 Motorcycle Service Technology Contest

360° Safety Inspection

50 Possible Points

Time Limit 30 Minutes

Sponsored by:

MOTORCYCLE MECHANICS INSTITUTE

A DIVISION OF UNIVERSAL TECHNICAL INSTITUTE

SkillsUSA
2015 Motorcycle Service Technology Contest

Objective: This workstation is designed to allow the contestant to show their ability to locate and effectively communicate, by recording onto a document, safety related concerns with a modern day motorcycle

Directions: Contestants have 30 minutes to read supplied support material, inspect a "bugged" motorcycle and properly identify 10 safety related issues. ***DO NOT CORRECT ANY ISSUES FOUND!!*** Proper terminology is required to receive credit for an answer. No disassembly of the vehicle will be required to successfully complete this task.

Contestant # _____

Inspection Area 1

- _____
- _____
- _____
- _____

Inspection Area 2

- _____
- _____
- _____
- _____

Inspection Area 3

- _____
- _____
- _____
- _____

Inspection Area 4

- _____
- _____
- _____

- _____

Inspection Area 5

- _____
- _____
- _____
- _____

Inspection Area 6

- _____
- _____
- _____
- _____

Judge attach score sheet to this contestant answersheet

SkillsUSA
2015 Motorcycle Service Technology Contest

Building a Repair Order Judges Scoresheet

50 Possible Points

Time Limit 30 Minutes

Sponsored by:

MOTORCYCLE MECHANICS INSTITUTE
A DIVISION OF UNIVERSAL TECHNICAL INSTITUTE

SkillsUSA
2015 Motorcycle Service Technology Contest

OBJECTIVE: The contestant will complete an accurate repair order using the materials supplied: Service Manual, Job Time Code Manual, Consumables Catalogue, Service interval Checklist and blank repair order.

Directions: Using the provided materials, Service Manual, Job Time Code Manual, Consumables Catalogue, Service interval Checklist and blank repair order, fill in an accurate and complete repair order for the scenario.

Contestant #_____

Judges Initials:_____

Scoring directions:

After collected, use the supplied "key" to check answers. Each marked area is either zero or full points. Correct part numbers are required.
Customer information + VIN filled in correctly = 10pts (all or nothing)
Part information filled in correctly including part numbers, quantity and cost = 10 pts (all or nothing)
Mileage and date information filled in correctly = 10 pts (all or nothing)
Description of work including "customer states" = 10 pts (all or nothing)
Labor rate, total labor, total parts and tax information filled in correctly = 10 pts (all or nothing)

Area	**Score**
Customer Info & V.I.N.	_____(0,10)
Parts Information	_____(0,10)
Mileage & Date	_____(0,10)
Description of work	_____(0,10)
Labor Rate & Costing	_____(0,10)

Total Score : _____

SkillsUSA
2015 Motorcycle Service Technology Contest

Building a Repair Order

50 Possible Points

Time Limit 30 Minutes

Sponsored by:

MOTORCYCLE MECHANICS INSTITUTE
A DIVISION OF UNIVERSAL TECHNICAL INSTITUTE

OBJECTIVE: The contestant will complete an accurate repair order using the materials supplied: Service Manual, Job Time Code Manual, Consumables Catalogue, Service interval Checklist and blank repair order.

Directions: Using the provided materials, Service Manual, Job Time Code Manual, Consumables Catalogue, Service interval Checklist and blank repair order, fill in an accurate and complete repair order for the scenario.

SkillsUSA
2015 Motorcycle Service Technology Contest

Building a Repair Order

A 2005 FLSTNI Softail has arrived at the dealership for a 10,000 mile service.

VIN = **5HD1JDB125Y022712**
Mileage = 10,371

John Q. Customer
3700 W. Juneau Ave
Milwaukee, WI 53208
555-555-5555

The customer states they want a black oil filter and non-synthetic oil for the engine during this service.

Resources Required
- Appropriate Service Manual
- Appropriate Job Time Code manual
- Current Parts & Accessories list (as provided)

Performance Standard
Locate the necessary service literature and accurately complete the assignment.

1) Receiving
Fill in accurate customer and vehicle information on the repair order.

2) Research
Using the appropriate service literature, identify all parts that must be replaced during this service and add them to the repair order.

Use the Job Time Code manual to find the flat rate time for this service.

Complete the repair order and estimate the total cost of the job. Assume an $80.00 per hour labor rate and 6.5% tax on parts. Every motorcycle repaired at this dealership is taken for a 9 mile test ride after service.

CONSUMABLES

FEATURING:

TIRE FITMENT GUIDE

OILS

LUBRICANTS

BATTERY CHARGERS

QUICK WASH

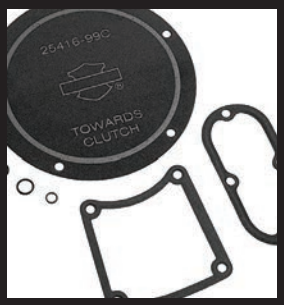

GENUINE MOTOR PARTS HARLEY-DAVIDSON

SEPTEMBER 2013

NOTICE:

Oil and Tire orders can now be combined on one bill of lading thus, the $2,000 minimum order quantity has been discontinued. Please see below for rate.

Description

Harley-Davidson® pays the shipping cost on non-emergency orders for Genuine Motor Parts, Motor Accessories, Tires, Buell® products and on limited order types for MotorClothes® Apparel and Accessories based on the parameters that follow.

Program Overview

Dealer is not responsible for freight charges on eligible product and orders totaling $995.00 or more at dealer net pricing. Method of shipment will be at Harley-Davidson's option.

Eligible Rules

- All continental U.S. and Alaskan dealers are eligible for free freight.
- Freight is free on orders totaling at least $995.00 for any combination of:
  - Motor Parts
  - Motor Accessories
  - MotorClothes Apparel and Accessories (on TA, SO and SE order types only) shipped from the Ace Distribution Center
  - Tires
  - Buell Products
  - Motor Oil and Lubricants

Non-Eligible Product Lines and Order Types

- DV/SS/ND type orders do not qualify for free freight.
- General Merchandise on RG orders.
- Supplier Direct Products.*
- Keys shipped via U.S. Postal Service.
- Dealer Aids.
- Marketing Materials.
- Service Literature.
- Sales Tools.

* Note: All Motor Parts & Accessories resalable product shipped directly from suppliers is eligible for free freight.

International Dealers

Free Freight and Trade Acceptance terms are not applicable.

See your District Manager, Distributor or Harley-Davidson Europe Representative to discuss programs, part numbers and pricing for H-D® 360 Motorcycle Oil, Synthetic Blend, SYN3® and FORMULA+ Lubricants.

Freight Costs

- Dealers are responsible for C.O.D., insurance fees and other special freight/fuel charges where applicable.
- Your P&A invoice will reflect the actual freight cost to ship the product to your dealership. If the shipment qualified for free freight, there will be a line on the invoice reflecting the freight savings.

Manufacturer suggested retail prices are subject to change. Please see harley-davidson.com for the most current manufacturer suggested retail prices on any product listed in this catalog. Actual retail prices may vary.

	DESCRIPTION / FITMENT	PART NUMBER	SUGGESTED RETAIL	PKG. QTY.
	Screamin' Eagle® SYN3® Full Synthetic Motorcycle Lubricant – SAE 20W50 – 1 Quart Bottle Formulated for use in Harley-Davidson® Engines, Transmissions and the following Primary Chaincase applications: '71-later XL, '83-'84 XR1000, and '84-later Big Twin models with wet-type diaphragm spring clutch.	62600005	$12.95	12
	Screamin' Eagle SYN3 Full Synthetic Motorcycle Lubricant – SAE 20W50 – 1 Gallon	62600031	$48.95	4
	Screamin' Eagle SYN3 Full Synthetic Motorcycle Lubricant – SAE 20W50 – 55 Gallon Drum	62600050	NA*	1
	HD 360 SAE 20W50 Quart bottle. Supplier direct ship.	62600007	$7.49	12
	HD 360 SAE 20W50 Gallon bottle. Supplier direct ship.	62600038	$29.95	4
	HD 360 SAE 20W50 55-gallon drum. Supplier direct ship.	62600039	NA*	1
	HD 360 SAE 10W40 Quart bottle. Supplier direct ship.	62600053	$7.49	12
	HD 360 SAE 50 Quart bottle. Supplier direct ship.	62600008	$7.49	12
	HD 360 SAE 50 55-gallon drum. Supplier direct ship.	62600045	NA*	1
	HD 360 SAE 60 Quart bottle. Supplier direct ship.	62600009	$7.49	12
	HD 360 SAE 60 55-gallon drum. Supplier direct ship.	62600046	NA*	1
	FORMULA+ Transmission, Primary and Chain Case Lubricant One quart bottle. Supplier direct ship.	62600004	$8.95	12
	FORMULA+ Transmission, Primary and Chain Case Lubricant 55 gallon drum. Supplier direct ship.	62600047	NA*	1

* NA parts for dealer purchase only. Please refer to system pricing for these items.

330-Gallon (1247.4 Liter) Tote

Top dispensing fitting allows complete draining of all fluid with no residual fluid when empty. The tote liner design contracts as fluid is being dispensed preventing air from entering and condensation from building up in the remaining fluid. Totes also eliminate condensation and scale contamination from forming as is prone in bulk tanks. 46"x46" floor space area allows more shop floor space over area required for four 55-gallon (220 gallon) drum storage. Reduces pump change-over time by 75%. Gross filled tote weight is 2,609 lbs. Empty tote and pallet weight is 160 lbs. Empty tote folds easily to allow for disposal in trash. Minimizes environmental risks associated with empty drums and eliminates drum disposal costs. The tote bulk dispensing fittings and equipment is available through the H-D® Authorized Tool and Equipment Program. For information call 1-877-HDEQUIP.

DESCRIPTION / FITMENT	PART NUMBER	SUGGESTED RETAIL	PKG. QTY.
330-Gallon (1247.4 Liter) Tote – SYN3® Screamin' Eagle® Full Synthetic Motorcycle Lubricant, SAE 20W50 Intermediate bulk tote container 45.25" x 45.25" x 45" and a wood pallet, 46" x 46"	62600051	NA*	1
330-Gallon (1247.4 Liter) Tote – H-D® 360 Motorcycle Oil, SAE 20W50 Intermediate bulk tote container 45.25" x 45.25" x 45" and a wood pallet, 46" x 46"	62600040	NA*	1
330-Gallon (1247.4 Liter) Tote – FORMULA+ Transmission and Primary Chaincase Lubricant Intermediate bulk tote container 45.25" x 45.25" x 45" and a wood pallet, 46" x 46"	62600048	NA*	1

* NA parts for dealer purchase only. Please refer to system pricing for these items.

Manufacturer suggested retail prices are subject to change. Please see harley-davidson.com for the most current manufacturer suggested retail prices on any product listed in this catalog. Actual retail prices may vary.

Who should use this procedure?

- Dealers who purchase H-D oil in bulk
  - 55 gallon drums
  - 330 gallon totes

What are the benefits of using this process?

- Accurate inventory management
- Allows use of re-order points in CIM
- Service Order Billing – oil SKU's appear on service order and are recognized at register
- Price changes are automatically captured on price tape

Conversions:

- 55 gallon drum = 220 quarts / 208 liters
- 330 gallon tote = 1,320 quarts / 1,249 liters

(as of 6/1/12)

DESCRIPTION / WEIGHT	BULK P/N	CONVERT TO SALEABLE UNIT (QUART OR LITRE)
HD360		
55 Gal. Drum – 20W50	U.S. – 62600039 Outside U.S. – 62600034	62600039QUART 62600039LITRE
330 Gal. Tote – 20W50	62600040	62600039QUART 62600039LITRE
55 Gal. Drum – SAE50	U.S. – 62600045 Outside U.S. – 62600035	62600045QUART 62600045LITRE
55 Gal. Drum – SAE60	62600046	62600046QUART 62600046LITRE
Formula +		
55 Gal. Drum	U.S. – 62600047 Outside U.S. – 62600036	62600047QUART 62600047LITRE
330 Gal. Tote	62600048	62600047QUART 62600047LITRE
SYN3		
55 Gal. Drum – 20W50	U.S. – 62600050 Outside U.S. – 62600037	62600050QUART 62600050LITRE
330 Gal. Tote – 20W50	62600051	62600050QUART 62600050LITRE

Upon receipt of drum or tote, simply adjust the quart saleable unit into inventory, per the quantity above. Don't forget to adjust the bulk unit out of stock.

	DESCRIPTION / FITMENT	PART NUMBER	SUGGESTED RETAIL	PKG. QTY.
	Battery Charging Harness with LED Charge Indicator Fits Harley-Davidson 12-volt batteries.	66000005	$14.95	1
	Battery Charging Harness with LED Charge Indicator – Bulk Jar – 15 Count	66000067	$15.40	15
	Battery Charging Harness Bulk Pack – 3 Prong – 25 Count Fits Harley-Davidson® 12-volt batteries. (Individual harness P/N 94624-97B has a retail price of $7.95.) Includes 25 marketing hangtags to place on pre-wired motorcycles.	99848-09	$8.19	25
	Battery Charging Extension Lead – 25' For use with most Harley-Davidson Battery Chargers.	99828-09	$19.95	1
	Battery Charging Extension Lead – 12.5' For use with most Harley-Davidson Battery Chargers.	99821-09	$14.95	1
	1.25 Amp Harley-Davidson® Battery Charging Stations – 2-Bank For 12-volt batteries.	99829-09	$129.95	1
	1.25 Amp Harley-Davidson Battery Charging Stations – 4-Bank For 12-volt batteries.	99847-09	$249.95	1
	Harley-Davidson 5-Bank Automatic "SuperSmart" Battery Charger – (120V) 3-Prong Grounded US Plug Supplier direct ship. To order an International battery charger, please refer to your country's Sales Administration Representative.	66000039	NA*	1
	Harley-Davidson 10-Bank Automatic "SuperSmart" Battery Charger – (120V) 3-Prong Grounded US Plug Supplier direct ship. To order an International battery charger, please refer to your country's Sales Administration Representative.	66000040	NA*	1

* NA parts for dealer purchase only. Please refer to system pricing for these items.

	DESCRIPTION / FITMENT	PART NUMBER	SUGGESTED RETAIL	PKG. QTY.
	750mA "SuperSmart" Battery Tender For 12-volt batteries.	66000038	$39.95	1
	1.25 Amp Global Battery Charger Fits Harley-Davidson 12-volt batteries. United States, Canada, Mexico and South America (except Argentina).	66000033	$79.95	1
	800mA Waterproof Battery Tender – United States, Canada, Mexico & South America For 12-volt batteries.	66000004	$49.95	1
	800mA Waterproof Battery Tender – International – Europe For 12-volt batteries.	99814-09	$49.95	1
	800mA Waterproof Battery Tender – International – U.K. For 12-volt batteries.	99816-09	$49.95	1
	800mA Waterproof Battery Tender – International – Australia For 12-volt batteries.	99819-09	$49.95	1
	800mA Waterproof Battery Tender – International – Japan For 12-volt batteries.	99820-09	$49.95	1

Wash Bay Bike Soap

Safe for use on all vehicle surfaces including denim paint, this low-foam soap is the perfect companion for your indoor wash bay. Wash Bay Bike Soap rinses clean, and is formulated to provide superior sheeting action to reduce water spots. Biodegradable.

DESCRIPTION / FITMENT	PART NUMBER	SUGGESTED RETAIL	PKG. QTY.
1 Gallon (3.79L) Bottle	93600105		1

Quick Wash

Fast and easy to use, Quick Wash is tough on dirt, oil and bugs, but gentle on other surfaces. This all-over bike cleaner is safe for use on all surfaces of your motorcycle, and does not strip wax, corrode fasteners or spokes, or stain leather and vinyl seats and saddlebags. Just spray it on and hose it off. Quick Wash gets into hard-to-reach spaces, and cleans without scrubbing. Sheeting action rinses clean and prevents spotting. Available in easy-to-handle trigger pump bottles, a convenient gallon refill container, and value priced bulk containers for use in your dealership's wash bay.

DESCRIPTION / FITMENT	PART NUMBER	SUGGESTED RETAIL	PKG. QTY.
16 oz. Trigger Bottle	93600011	$7.95	12
32 oz. Trigger Bottle	93600012	$15.95	6
1 Gallon Refill Bottle	93600013	$42.95	4
5 Gallon Refill Pail	93600014	NA*	1
20 Gallon Drum	93600015	NA*	1

* NA parts for dealer purchase only. Please refer to system pricing for these items.

Quick Wash Pump

Reduce the chance of messy spills. This hand pump simplifies the transfer of Quick Wash Cleaner from bulk storage containers into refillable bottles. The dual-action design draws liquid on both the up and down stroke for fast filling. Reusable pump is easy to clean and install.

DESCRIPTION / FITMENT	PART NUMBER	SUGGESTED RETAIL	PKG. QTY.
Fits Quick Wash 5 gallon pail P/N 93600014.	93600017	NA*	1
Fits Quick Wash 20 gallon drum P/N 93600015.	93600018	NA*	1

* NA parts for dealer purchase only. Please refer to system pricing for these items.

Gloss Detailer

This easy-to-apply mist produces the highest possible gloss finish in the shortest amount of time. Formulated to enhance luster and provide UV protection between waxes, this non-abrasive quick detailer can be applied to paint, clear coat, chrome, powder coat, windshields, vinyl and plastic. Gloss Detailer contains no waxes, silicones, oils or hydrocarbon solvents, and will not remove Glaze Poly Sealant. Biodegradable.

DESCRIPTION / FITMENT	PART NUMBER	SUGGESTED RETAIL	PKG. QTY.
16 oz. Spray Bottle	93600062	$9.95	12
1 Gallon Refill Bottle	93600085	$29.95	4

* NA parts for dealer purchase only. Please refer to system pricing for these items.

	DESCRIPTION / FITMENT	PART NUMBER	SUGGESTED RETAIL	PKG. QTY.
	Gasket Service Kit Fits '99-'06 Twin Cam (except '06 Dyna®) models. Kit Comprised of: 2 O-Rings (11105), 1 O-Ring (11324), 1 Clutch Cover Gasket (25416-99C), 1 Inspection Cover Gasket (34906-85D), and 1 Inspection Cover Gasket (60567-90C)	17361-05	$17.71	24
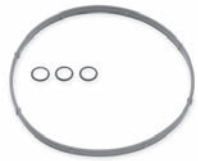	**Gasket Service Kit** Fits '06 Dyna and '07-later Twin Cam models.	17369-06	$5.12	36
	SYN3® Service Sticker	13334-04	$.75	50
	Spark Plug Bulk Pack – 6R12 Fits '99-later Twin Cam-equipped models and '86-later Evolution®-equipped Sportster® models.	32369-04X	$3.95	200
	Spark Plug Bulk Pack – 5R6A Fits '84-'00 Evolution 1340 and '75-'84 Shovelhead 1200 and 1340 models.	32368-04X	$3.95	200

* NA parts for dealer purchase only. Please refer to system pricing for these items.

H-D RIM SEAL KITS AND MICHELIN® INNER TUBES AND RIM BANDS

DESCRIPTION / FITMENT	PART NUMBER		PKG. QTY.
HARLEY-DAVIDSON RIM SEAL KITS			
Harley-Davison® Rim Seal – 16" x 3" Fits '12 FLHRC, FLSTN, FLSTC, and TLE/TLE Ultra Sidecars equipped with Smoothie Laced Wheels.	44752-11	$25.95	1
Harley-Davison Rim Seal – 17" x 3" Fits '12 FLHTC, FLHTCU, FLTRU, and TLE/TLE Ultra Sidecars equipped with Smoothie Laced Wheels.	44753-11	$25.95	1
Harley-Davison Rim Seal – 18" x 3.5" Fits '12 FLHX and FLTRX models equipped with Smoothie Laced Wheels.	44754-11	$26.95	1
Harley-Davison Rim Seal – 16" x 5" Fits '12 FLHRC, FLHTC, FLHTCU, FLHX, FLTRU and FLTRX models equipped with Smoothie Laced Wheels.	44755-11	$27.95	1
MICHELIN INNER TUBES			
Michelin® Inner Tubes – 17" Center Metal Valve Fits 17" 160/70-17 and 180/60-17 tires and rims with Center Valve.	41314-10	$30.95	1
Michelin Inner Tubes – 19" Center Metal Valve Fits 19" 100/90-19 tires and rims with Center Valve.	41316-10	$25.95	1
Michelin Inner Tubes – 19" Center Metal Valve Fits VRSC models with 120/10-19 Radial front tires.	43233-11	$24.95	1
Michelin Inner Tubes – 16" Side Metal Valve Fits 130/90-16, 150/80-16, MT90-16 and MU85-16 tires and rims with side valve.	40572-11	$31.95	1
Michelin Inner Tubes – 16" Center Metal Valve Fits 130/90-16, 150/80-16, MT90-16 and MU85-16 tires and rims with center valve.	40876-11	$31.95	1
Michelin Inner Tubes – 21" Center Metal Valve Fits 80/90-21 and MH90-21 tires and rims with center valve.	40941-11	$21.95	1
MICHELIN RIM BANDS			
Michelin Rim Bands – 4.5" x 17/18" Fits 17" Center Valve rims.	41319-10	$5.49	2
Michelin Rim Bands – 1.6/2.0" x 18/19" Fits 19" Center Valve rims.	41323-10	$3.95	2
Michelin Rim Bands – 2.15/3" x 17/18/19" Fits 19" Center Valve rims. Fits VRSC Models with 120/10-19 Radial front tires.	42039-11	$6.95	2
Michelin Rim Bands – 3" x 16" Fits 16" Side Metal Valve rims.	40875-11	$3.95	2
Michelin Rim Bands – 3" x 16" Fits 16" Center Metal Valve rims.	40877-11	$3.95	2
Michelin Rim Bands – 1.6"/1.85" x 17"/18"/19" Fits 21" Center Metal Valve rims.	40954-11	$2.95	2

DESCRIPTION / FITMENT	PART NUMBER	SUGGESTED RETAIL	PKG. QTY.
DUNLOP® INNER TUBES			
MT/MU90-16 Side Metal Valve – 16" Tube *JP*	40558-82	$32.95	1
MT/MU90-16 Center Metal Valve – 16" Tube *JP* Fits '05-later smooth profile laced wheels.	40575-05	$33.95	1
180/65-16 Center Metal Valve – 16" Tube *JP*	40592-09	$32.95	1
130/80-17 Center Metal Valve – 17" Tube *JP*	40593-09	$30.95	1
160/70-180/60-17 Center Metal Valve – 17" Tube *JP*	40502-06	$32.95	1
200/55R17 Center Metal Valve – 17" Tube *JP*	41491-08	$45.95	1
MJ/MM90-19 Center Metal Valve with Adapter Ring – 19" Tube *JP* Fits Center Rubber Valve and Metal Valve rims.	41188-06	$28.95	1
120/70R19 Center Metal Valve – 19" Tube *JP*	41007-07	$38.95	1
MH90-21 Center Metal Valve – 21" Tube *JP*	43140-80	$27.95	1

DUNLOP RIM BANDS			
Rim Band for Center Valve Rim – 16" *JP* For Smooth Profile Laced Wheels.	43164-05	$4.49	2
Rim Band for MT90-16 Side Valve Rim – 16" *JP*	43147-40	$3.95	2
Rim Band for 180/65-16 Center Valve Rim – 16" *JP*	43099-09	$6.95	2
Rim Band for Center Valve Rim – 17" *JP*	43101-06	$5.49	2
Rim Band for Center Valve Radical Rim – 17" *JP*	40916-08	$8.95	1
Rim Band for 130/80-17 Center Valve Rim – 17" *JP*	43341-09	$3.95	2
Rim Band for Center Valve Rim – 19" *JP*	43145-47	$3.95	2
Rim Band for Center Valve Radial Tube Rim – 19" *JP*	41996-07	$3.95	2
Rim Band for Center Valve Rim – 21" *JP*	43939-89	$3.95	2

ORIGINAL EQUIPMENT AND RECOMMENDED REPLACEMENT TIRES

Model Fitment	Stock or Optional Fitment	Tread	Size	Rim Size in Inches	PSI	Sidewall Style	Part Number	Price
SPORTSTER® – FRONT								
DUNLOP® HARLEY-DAVIDSON® PERFORMANCE TIRES								
'96-'03 XL1200 Sport	Stock	GT502F	100/90-19	2.15 x 19	30	BW	**40554-04A**	**$165.95**
'04-later XL (except XL Custom, XL1200X, XL1200V, XR1200/X or '11-later XL883L) Installation requires installation of matching GT502 Rear Tire P/N 40555-04A	Optional							
'96-'10 XL883C	Optional	GT502F	80/90-21	2.15 x 21	30	BW	**43117-09**	**$169.95**
'96-'10 XL1200C	Optional							
DUNLOP® HARLEY-DAVIDSON® TIRE SERIES								
'10-later XL1200X	Stock on MY '10	D402F	MT90B16	3.00 x 16	30	BW	**43022-91A**	**$174.95**
'08-'13 XR1200/X	Stock on MY '08-'11	D209F RP	120/70ZR18	3.50 x 18	36	BW	**43229-08**	**$238.95**
'04-later XL (except XL Custom, XL1200X, XL1200V, XR1200/X or '11-later XL883L)	(BW) Stock on MY '04-'10	D401F	100/90-19	2.15 x 19	30	WWW	**55193-10**	**$202.95**
						BW	**43112-91A**	**$154.95**
'91-'09 XL883, XL883R, XL883 Hugger (except XL Custom)	Stock	D401F	100/90-19	2.15 x 19	30	BW	**43112-91A**	**$154.95**
'88-'03 XL1200 (except XL Custom, XL Sport)	Stock							
'83-'84 XR1000	Stock							
'81-'90 XL (except XR1000, XL1200)	Stock	D401F	90/90-19	2.15 x 19	30	BW	**40567-90A**	**$158.95**
'96-'10 XL883C / XL1200C	Stock	D402F	MH90-21	2.15 x 21	30	BW	**43104-93A**	**$145.95**
'12-later XL1200V	Stock	D402F	MH90-21	2.15 x 21	30	MWW	**43100004**	**$185.95**
MICHELIN® HARLEY-DAVIDSON® TIRE SERIES								
'11-later XL1200C	Stock on MY '11-later	SCORCHER 31	130/90B16	3.00 x 16	36	BW	**55035-11A**	**$199.95**
'10-later XL1200X								
'11-later XL883L	Stock	SCORCHER 11	120/70ZR18	3.50 x 18	30	BW	**40879-11A**	**$239.95**
'08-'13 XR1200/X	Stock on MY '12-later							
'04-later XL (except XL Custom, XL1200X, XL1200V, XR1200/X or '11-later XL883L)	Stock on MY '11-later	SCORCHER 31	100/90B19	2.15 x 19	30	BW	**43258-07B**	**$165.95**
'12-later XL1200V	Optional	SCORCHER 31	80/90-21	2.15 x 21	30	BW	**41036-12**	**$169.95**
SPORTSTER – REAR								
DUNLOP® HARLEY-DAVIDSON® PERFORMANCE TIRES								
'04-later XL (except XL1200X, XL1200V, XR1200/X, '11-later XL883L or '11-later XL1200C) Installation on models with 19" front wheel requires installation of matching GT502F Front Tire P/N 40554-04A	Optional	GT502	150/80B16	3.00 x 16	36/40	BW	**40555-04A**	**$234.95**
'96-'03 XL1200 Sport	Stock	GT502	130/90B16	3.00 x 16	36/40	BW	**40556-06A**	**$218.95**
DUNLOP® HARLEY-DAVIDSON® TIRE SERIES								
'04-later XL (except XR1200/X, XL1200V, '11-later XL883L, '11-later XL1200C)	Stock MY '04-'10	D401	150/80B16	3.00 x 16	36/40	BW	**43264-02**	**$203.95**
'04-later XL (except XL1200X, XL1200V, XR1200/X, '11-later XL883L or '11-later XL1200C)	Optional	D401	150/80B16	3.00 x 16	36/40	WWW	**55192-10**	**$272.95**
'12-later XL1200V	Stock	D401	150/80B16	3.00 x 16	40	MWW	**43200007**	**$252.95**
'81-'03 XL (except XL1200 Sport)	Stock	D401	130/90B16	3.00 x 16	36/40	BW	**40565-91B**	**$178.95**
'08-'13 XR1200/X	Stock '08-'10	D209HD	180/55ZR17	5.50 x 17	42	BW	**43231-08**	**$301.95**
MICHELIN® HARLEY-DAVIDSON® TIRE SERIES								
'04-later XL (except XR1200/X, '11-later XL883L)	Stock on MY '11-later (except XL1200V)	SCORCHER 31	150/80B16	3.00 x 16	36/40	BW	**40878-11**	**$234.95**
'08-'13 XR1200/X	Stock on MY '12	SCORCHER 11	180/55ZR17	5.50 x 17	42	BW	**43200011**	**$299.95**
'11-later XL883L	Stock	SCORCHER 11	150/60ZR17	4.50 x 17	36/40	BW	**43216-11**	**$220.95**

Sidewall Style Key:

BW – *Blackwall*
SWW – *Slim Whitewall*
MWW – *Medium Whitewall*
WWW – *Wide Whitewall*
EWWW – *Engraved Wide Whitewall*

Notice: Suggested retail prices are subject to change. Please see harley-davidson.com for the most current suggested retail prices on any product listed in this catalog. Actual retail prices may vary.

WARNING: Use only Harley-Davidson approved tires. See a Harley-Davidson dealer. Using non-approved tires or mixing approved tires from different manufacturers on the same motorcycle, can adversely affect stability, which could result in death or serious injury.

ORIGINAL EQUIPMENT AND RECOMMENDED REPLACEMENT TIRES

Model Fitment	Stock or Optional Fitment	Tread	Size	Rim Size in Inches	PSI	Sidewall Style	Part Number	Price
DYNA® – FRONT								
DUNLOP® HARLEY-DAVIDSON® PERFORMANCE TIRES								
'02-later Dyna (except FXDF, FXDFSE and FXDWG models)	Optional	GT502F	100/90-19	2.15 x 19	30	BW	**40554-04A**	**$165.95**
'00-'01 FXDX	Stock							
'93-later FXDWG	Stock MY '10-'11	GT502F	80/90-21	2.15 x 21	30	BW	**43117-09**	**$169.95**
DUNLOP® HARLEY-DAVIDSON® TIRE SERIES								
'08-later FXDF	Stock	D427F	130/90B16	3.00 x 16	36	BW	**43218-08**	**$199.95**
'09-'10 FXDFSE/2								
'12-later FLD	Stock	D402F	130/70-18	3.50 x 18	36	BW	**43371-07A**	**$230.95**
'91-later Dyna models (except FXDF, FXDFSE/2 and FXDWG models)	Stock MY '91-'09	D401F	100/90-19	2.15 x 19	30	BW	**43112-91A**	**$154.95**
'84-later FXR (except FXLR, FXR2)	Stock							
'83-later FXRT	Stock							
'81-'85 FX	Stock	D401F	90/90-19	2.15 x 19	30	BW	**40567-90A**	**$158.95**
'82-'83 FXR (except FXRT)	Stock							
'93-'08 FXDWG	Stock	D402F	MH90-21	2.15 x 21	30	BW	**43104-93A**	**$145.95**
'86-earlier FXWG	Stock							
'94-earlier FXLR	Stock							
'99 FXR2	Stock							
'07-'08 FXDSE/2	Stock							
MICHELIN® HARLEY-DAVIDSON® TIRE SERIES								
'02-later Dyna (except FXDF, FXDFSE/2 and FXDWG models)	Stock MY '10-later	SCORCHER 31	100/90-19	2.15 x 19	30	BW	**43258-07B**	**$165.95**
'08-later FXDF	Optional	SCORCHER 32	130/90B16	3.00 x 16	36	BW	**43100003**	**$214.95**
'10-later FXDWG	Stock MY '12-later	SCORCHER 31	80/90-21	2.15 x 21	38	BW	**41036-12**	**$169.95**
DYNA – REAR								
DUNLOP® HARLEY-DAVIDSON® PERFORMANCE TIRES								
'00-'01 FXDX	Stock	GT502	150/80B16	3.00 x 16	36/40	BW	**40555-04A**	**$234.95**
'02-'05 Dyna	Optional							
'10-later FXDWG	Stock MY '10-'11	GT502	180/60B17	4.50 x 17	40	BW	**43197-04B**	**$329.95**
Replacement Tire for Harley-Davidson Wide Tire Kits P/N 44075-04, 43705-06, 43768-06	Optional							
DUNLOP® HARLEY-DAVIDSON® TIRE SERIES								
'82-later FXR	Stock	D401	130/90B16	3.00 x 16	36/40	BW	**40565-91B**	**$178.95**
'82-later FXRT	Stock							
'91-'01 Dyna (except '00-'01 FXDX)	Stock							
'02-'05 Dyna	Stock	D401	150/80B16	3.00 x 16	36/40	BW	**43264-02**	**$203.95**
'08-later FXDF	Stock	D427	180/70B16	5.00 x 16	36/40	BW	**43228-08**	**$294.95**
'09-'10 FXDFSE/2	Stock							
'07-'08 FXDSE/2	Stock	D407	170/60R17	4.50 x 17	38/42	BW	**41998-07**	**$254.95**
'06-later Dyna (except '07-'08 FXDSE/2, '08-later FXDF)	Stock MY '06-'10	K591	160/70B17	4.50 x 17	36/40	BW	**43169-00A**	**$237.95**
'12-later FLD	Stock	D401	160/70B17	4.50 x 17	40	BW	**43200015**	**$296.95**
MICHELIN® HARLEY-DAVIDSON® TIRE SERIES								
'08-later FXDF	Optional	SCORCHER 32	180/70B16	5.00 x 16	36/40	BW	**43200004**	**$294.95**
'06-later Dyna (except FLD, FXDF and '07-'08 FXDSE/2)	Stock MY '10-later	SCORCHER 31	160/70B17	4.50 x 17	36/40	BW	**43250-07B**	**$246.95**
'10-later FXDWG	Stock MY '12-later	SCORCHER 31	180/60B17	4.50 x 17	40	BW	**43200005**	**$329.95**

Sidewall Style Key:

BW – *Blackwall*
SWW – *Slim Whitewall*
MWW – *Medium Whitewall*
WWW – *Wide Whitewall*
EWWW – *Engraved Wide Whitewall*

Notice: Suggested retail prices are subject to change. Please see harley-davidson.com for the most current suggested retail prices on any product listed in this catalog. Actual retail prices may vary.

WARNING: Use only Harley-Davidson approved tires. See a Harley-Davidson dealer. Using non-approved tires or mixing approved tires from different manufacturers on the same motorcycle, can adversely affect stability, which could result in death or serious injury.

ORIGINAL EQUIPMENT AND RECOMMENDED REPLACEMENT TIRES

Model Fitment	Stock or Optional Fitment	Tread	Size	Rim Size in Inches	PSI	Sidewall Style	Part Number	Price
SOFTAIL® – FRONT								
DUNLOP® HARLEY-DAVIDSON® PERFORMANCE TIRES								
'84-'07 FXST	Optional	GT502F	80/90-21	2.15 x 21	30	BW	**43117-09**	**$169.95**
'84-'07 FXSTB	Optional							
'84-'07 FXSTC	Optional							
'84-'07 FXSTD	Optional							
'84-'07 FXSTS	Optional							
DUNLOP® HARLEY-DAVIDSON® TIRE SERIES								
'87-later FLSTC	(BW) Stock (WWW) Stock MY '09-later	D402F	MT90B16	3.00 x 16	36	EWWW WWW SWW BW	**43124-94B** **43118-92A** **43115-91A** **43022-91A**	**$276.95** **$212.95** **$203.95** **$172.95**
'90-'06 FLSTF	(BW) Stock							
'05-later FLSTN	(WWW) Stock							
'81-'08 FLSTS	(BW) Stock							
'05-'07 FLSTSC	(BW) Stock							
'08-'11 FLSTSB	(BW) Stock							
'14 FLSTNSE	Stock	D402F	MT90B16	3.00 x 16		WWW	**43118-92A**	**$212.95**
'05 FLSTFSE	Stock	D402F	MT90B16	3.00 x 16	36	BW	**43022-91A**	**$174.95**
'12-later FLS								
'07-later FLSTF	Stock	D408F	140/75R17	3.50 x 17	36	BW	**41474-06B**	**$230.95**
'10-later FLSTFB	Stock							
'06 FLSTFSE2	Stock							
'10-'12 FLSTSE/2/3	Stock	D408F	130/70R18	3.50 x 18	36	BW	**41999-07B**	**$261.95**
'08-'09 FXSTSSE2/3	Stock							
'08-'09 FXCW	Stock	D408F	90/90-19	2.15 x 19	30	BW	**41566-08B**	**$158.95**
'08-'11 FXCWC	Stock							
'13-'14 FXSB/FXSBSE/2	Stock	D408F	130/60B21	3.50 x 21	30	BW	**43100008**	**$185.95**
'84-'07 FXST	Stock	D402F	MH90-21	2.15 x 21	30	BW	**43104-93A**	**$145.95**
'84-'07 FXSTB	Stock							
'84-'07 FXSTC	Stock							
'84-'07 FXSTD	Stock							
'04 FXSTDSE2	Stock							
'84-'07 FXSTS	Stock							
'07 FXSTSSE	Stock							
'11-'13 FXS	Stock							
'08-later FXST	Stock	D408F	MH90-21	2.15 x 21	30	BW	**43390-08A**	**$151.95**
'08-'09 FXSTB	Stock							
'08-'10 FXSTC	Stock							
MICHELIN® HARLEY-DAVIDSON® TIRE SERIES								
'06-'10 FLSTC	Optional	SCORCHER 31	130/90B16	3.00 x 16	36	BW	**55035-11A**	**$199.95**

Sidewall Style Key:

BW – *Blackwall*
SWW – *Slim Whitewall*
MWW – *Medium Whitewall*
WWW – *Wide Whitewall*
EWWW – *Engraved Wide Whitewall*

Notice: Suggested retail prices are subject to change. Please see harley-davidson.com for the most current suggested retail prices on any product listed in this catalog. Actual retail prices may vary.

WARNING: Use only Harley-Davidson approved tires. See a Harley-Davidson dealer. Using non-approved tires or mixing approved tires from different manufacturers on the same motorcycle, can adversely affect stability, which could result in death or serious injury.

ORIGINAL EQUIPMENT AND RECOMMENDED REPLACEMENT TIRES

Model Fitment	Stock or Optional Fitment	Tread	Size	Rim Size in Inches	PSI	Sidewall Style	Part Number	Price
SOFTAIL® – REAR								
DUNLOP® HARLEY-DAVIDSON® PERFORMANCE TIRES								
'03-'05 Softail (except FXSTD, FLSTS)	Optional	GT502	150/80B16	3.00 x 16	36/40	BW	**40555-04A**	**$234.95**
Replacement tire for Harley-Davidson Wide Tire Kits P/N 43684-99A, 43685-00A, 44490-00A	Optional							
'04 FXSTDSE2	Optional	GT502	180/60B17	4.50 x 17	40	BW	**43197-04B**	**$329.95**
DUNLOP® HARLEY-DAVIDSON® TIRE SERIES								
'87-'02 FLSTC	(BW) Stock	D402	MT90B16	3.00 x 16	36/40	EWWW WWW SWW BW	**43125-94B** **43119-92A** **43114-91B** **43102-91B**	**$304.95** **$240.95** **$231.95** **$203.95**
'90-'02 FLSTF	(BW) Stock							
'97-'02 FLSTS	(WWW) Stock							
'95-'02 FXSTC	(BW) Stock							
'95-'02 FXSTS	(BW) Stock							
'99-'02 FXSTB	Stock	D402	MT90B16	3.00 x 16	36/40	BW	**43102-91B**	**$203.95**
'05-later FLSTN	(WWW) Stock	D402	MU85B16	3.00 x 16	36/40	EWWW WWW SWW BW	**43167-08** **43353-03** **43332-04** **43200001**	**$299.95** **$251.95** **$242.95** **$211.95**
'03 FLSTS	(WWW) Stock							
'11-'13 FXS	(BW) Stock							
'12-later FLS	Stock	D402	MU85B16	3.00 x 16	40	BW	**43200001**	**$211.95**
'84-'94 FXSTC	Stock	D401	130/90B16	3.00 x 16	36/40	BW	**40565-91B**	**$178.95**
'84-'94 FXSTS	Stock							
'03-later FLSTC	(BW) Stock (WWW) Stock MY '09-later (SWW) Option (EWWW) Option	D401 D402 D402 D402	150/80B16 MU85B16 MU85B16 MU85B16	3.00 x 16	36/40	BW WWW SWW EWWW	**43264-02** **43353-03** **43332-04** **43167-08**	**$203.95** **$251.95** **$242.95** **$299.95**
'03-'05 Softail (except FXSTD, FLSTS)	Stock	D401	150/80B16	3.00 x 16	36/40	BW	**43264-02**	**$203.95**
'06 FLSTF	Stock							
'05 FLSTFSE	Stock							
'05-later FLSTSC	Stock							
'07-later FLSTF	Stock	D407	200/55R17	6.00 x 17	42	BW	**43242-06B**	**$260.95**
'10-later FLSTFB	Stock							
'06 FLSTFSE2	Stock							
'06-later FXST	Stock							
'06-later FXSTB	Stock							
'06-later FXSTC	Stock							
'06-later FXSTS	Stock							
'07-'08 FXSTSSE/2	Stock							
'08-later FLSTSB	Stock	D401	200/55R17	6.00 x 17	42	BW	**43970-08**	**$240.95**
'00-'07 FXSTD (except '04 FXSTDSE2)	Stock	K591	160/70B17	4.50 x 17	36/40	BW	**43169-00A**	**$237.95**
'08-'09 FXCW	Stock	D407	240/40R18	8.00 x 18	42	BW	**41688-08**	**$314.95**
'08-'11 FXCWC	Stock							
'13-'14 FXSB/FXSBSE/2	Stock							
'09 FXSTSSE3	Stock							
'10-'12 FLSTSE/2/3	Stock	D407	200/50R18	6.00 x 18	42	BW	**41771-10**	**$270.95**
MICHELIN® HARLEY-DAVIDSON® TIRE SERIES								
'06-'10 FLSTC	Optional	SCORCHER 31	150/80-16	3.00 x 16	36/40	BW	**40878-11**	**$234.95**

Sidewall Style Key:

BW – *Blackwall*
SWW – *Slim Whitewall*
MWW – *Medium Whitewall*
WWW – *Wide Whitewall*
EWWW – *Engraved Wide Whitewall*

Notice: Suggested retail prices are subject to change. Please see harley-davidson.com for the most current suggested retail prices on any product listed in this catalog. Actual retail prices may vary.

WARNING: Use only Harley-Davidson approved tires. See a Harley-Davidson dealer. Using non-approved tires or mixing approved tires from different manufacturers on the same motorcycle, can adversely affect stability, which could result in death or serious injury.

ORIGINAL EQUIPMENT AND RECOMMENDED REPLACEMENT TIRES

Model Fitment	Stock or Optional Fitment	Tread	Size	Rim Size in Inches	PSI	Sidewall Style	Part Number	Price
TOURING – FRONT								
			DUNLOP® HARLEY-DAVIDSON® TIRE SERIES					
'14 FLHR	Stock	D408F	130/80B17	3.00 x 17	36	BW	**43109-09A**	**$227.95**
'14 FLHTCU	Stock							
'14 FLHTK/FLHTKSE	Stock							
'14 FLHP	Stock							
'14 FLHTP	Stock							
'14 FLHX	Stock	D408F	130/60B19	3.50 x 19	36	BW	**43100013**	**$192.95**
'14 FLHXS	Stock							
'14 FLHRSE6	Stock							
'14 FLHRC	Stock	D402F	MT90B16	3.00 x 16	36	WWW	**43118-92A**	**$212.95**
'05 FLHTCSE2	Stock	D402F	MT90B16	3.00 x 16	36	BW	**43022-91A**	**$172.95**
'06-'08 FLHTCUSE/2/3	Stock							
'09-'13 FLHRC and FLHRC/TLE Sidecar	Stock	D408F	130/90B16	3.00 x 16	36	WWW	**43211-09A**	**$235.95**
'09-'13 FLHP/E FLHTP	Stock	D408F	130/80B17	3.00 x 17	36	BW	**43109-09A**	**$227.95**
'09-'13 FLHR	(SWW) Stock	D408F	130/80B17	3.00 x 17	36	BW SWW	**43109-09A** **43115-09A**	**$227.95** **$235.95**
'09-'13 FLHT	Optional							
'09-'13 FLHTC/U	(SWW) Stock							
'09-'13 FLHTCUSE4/5/6/7/8	Optional							
'10-'13 FLHTK	(SWW) Stock							
'09 FLHX	(BW) Stock							
'09-'13 FLTR/U	(BW) Stock							
'09-'13 TLE Sidecar (except FLHRC/TLE)	Optional							
'04-'08 FL Touring models equipped with 18" accessory Front Wheel (except '07-'08 FLHRSE)	Optional	D402F	130/70-18	3.50 x 18	36	BW	**43371-07A**	**$230.95**
'07-'08 FLHRSE3/4	Optional	D408F	130/70R18	3.50 x 18	36	BW	**41999-07B**	**$261.95**
'10-'13 FLHX and FLTRX	Stock	D408F	130/70B18	3.50 x 18	36	BW	**44026-09A**	**$212.95**
'10 FLHXSE	Stock							
'09 FLTRSE3	Stock							
'11 FLTRUSE	Stock							
'11-'12 FLHXSE2/3	Stock	D408F	130/60B19	3.50 x 19	36	BW	**43100013**	**$192.95**
'13 FLHRSE5	Stock							
'12-'13 FLTRXSE/2	Stock							
'13-earlier Touring models equipped with 19" Agitator wheels	Optional							
'81-'08 FLH	Optional	D402F	MT90B16	3.00 x 16	36	EWWW WWW SWW BW	**43124-94B** **43118-92A** **43115-91A** **43022-91A**	**$276.95** **$212.95** **$203.95** **$174.95**
'81-'08 FLHR (except '07-'08 FLHRSE/2)	(SWW) Stock							
'81-'08 FLHRC	(WWW) Stock							
'81-'08 FLHS	Optional							
'81-'08 FLHT	(BW) Stock							
'81-'08 FLHTC/U	(SWW) Stock							
'81-'08 FLHX	(BW) Stock							
'81-'08 FLT	(BW) Stock							
'81-'08 FLTR	(BW) Stock							
'04-'08 TLE/Ultra Sidecar	Optional							

Sidewall Style Key:

BW – *Blackwall*
SWW – *Slim Whitewall*
MWW – *Medium Whitewall*
WWW – *Wide Whitewall*
EWWW – *Engraved Wide Whitewall*

WARNING: Use only Harley-Davidson approved tires. See a Harley-Davidson dealer. Using non-approved tires or mixing approved tires from different manufacturers on the same motorcycle, can adversely affect stability, which could result in death or serious injury.

ORIGINAL EQUIPMENT AND RECOMMENDED REPLACEMENT TIRES

Model Fitment	Stock or Optional Fitment	Tread	Size	Rim Size in Inches	PSI	Sidewall Style	Part Number	Price
TOURING – REAR								
			DUNLOP® HARLEY-DAVIDSON® TIRE SERIES					
'14 Touring (except FLHRC, FLHRSE6)	Stock	D407T	180/65B16	5.00 x 16	40	BW	**43200027**	**$290.95**
'14 FLHRSE6	Stock	D407	180/55B18	5.00 x 18	40	BW	**44006-09**	**$296.95**
'14 FLHRC	Stock	D407	180/65B16	5.00 x 16	40	WWW	**43230-09**	**$308.95**
'09-'13 FLHP/E FLHTP	Stock	D407	180/65B16	5.00 x 16	40	BW	**43329-09**	**$290.95**
'09-'13 FLHRC	Stock	D407	180/65B16	5.00 x 16	40	WWW	**43230-09**	**$308.95**
'09-'13 FLHTC	(SWW) Stock	D407	180/65B16	5.00 x 16	40	BW SWW	**43329-09** **43332-09**	**$290.95** **$301.95**
'09-'13 FLHTCU	(SWW) Stock							
'09-'13 FLHR	(SWW) Stock							
'09-'13 FLHT	(BW) Stock							
'09-'13 FLHTCUSE4/5/6/7/8	(BW) Stock							
'10-'13 FLHTK	(SWW) Stock							
'09-'13 FLHX	(BW) Stock							
'09-'13 FLTR/U	(BW) Stock							
'10-'13 FLTRX	(BW) Stock							
'05 FLHTCSE2	Stock	D402	MU85B16	3.00 x 16	36/40	BW	**43200001**	**$211.95**
'06-'08 FLHTCUSE/2/3								
'04-'08 FLHX	Stock	D402	MU85B16	3.00 x 16	36/40	BW SWW	**43200001** **43332-04**	**$211.95** **$242.95**
	Optional							
'04-'08 FLHR (except '07-'08 FLHRSE/2)	(SWW) Stock	D402	MU85B16	3.00 x 16	36/40	EWWW WWW SWW BW	**43167-08** **43353-03** **43332-04** **43200001**	**$299.95** **$251.95** **$242.95** **$211.95**
'04-'08 FLHRC	(WWW) Stock							
'04-'08 FLHT	(BW) Stock							
'04-'08 FLHTC	(SWW) Stock							
'04-'08 FLHTCU	(SWW) Stock							
'04-'08 FLTR	(BW) Stock							
'81-'03 FLH	(SWW) Stock	D402	MT90B16	3.00 x 16	36/40	EWWW WWW SWW BW	**43125-94B** **43119-92A** **43114-91B** **43102-91B**	**$304.95** **$240.95** **$231.95** **$203.95**
'81-'03 FLHR	(SWW) Stock							
'81-'03 FLHRC	(WWW) Stock							
'81-'03 FLHS	(SWW) Stock							
'81-'03 FLHT	(SWW) Stock							
'81-'03 FLHTC/U	(SWW) Stock							
'81-'03 FLT	(SWW) Stock							
'81-'03 FLTR	(SWW) Stock							
'81-'03 CLE, RLE, TLE/Ultra Sidecar	(SWW) Stock							
'07-'08 FLHRSE/2	Stock	D407	170/60R17	4.50 x 17	38/42	BW	**41998-07**	**$254.95**
'13 FLHRSE5	Stock	D407	180/55B18	5.00 x 18	40	BW	**44006-09**	**$296.95**
'10-'12 FLHXSE/2/3	Stock							
'09 FLTRSE	Stock							
'11 FLTRUSE	Stock							
'12-'13 FLTRXSE/2	Stock							
TRI GLIDE® – FRONT								
			DUNLOP® HARLEY-DAVIDSON® TIRE SERIES					
'09-later FLHTCUTG	(BW) Stock	D402F	MT90B16	3.00 x 16	36	EWWW WWW SWW BW	**43124-94B** **43118-92A** **43115-91A** **43022-91A**	**$276.95** **$212.95** **$203.95** **$174.95**
'10-'11 FLHXXX	(BW) Stock							
TRI GLIDE – REAR								
			DUNLOP® HARLEY-DAVIDSON® TIRE SERIES					
'09-later FLHTCUTG	Stock	SIGNATURE	P205/65R15	5.50 x 15	26	BW	**83324-09**	**$167.95**
'10-'11 FLHXXX	Stock							
H-D Trike models equipped with accessory wheel P/N 55069-11 or 55130-11	Optional	SIGNATURE	P205/60R16	5.50 x 16	26	BW	**83665-11A**	**$171.95**

Sidewall Style Key:

BW – *Blackwall*
SWW – *Slim Whitewall*
MWW – *Medium Whitewall*
WWW – *Wide Whitewall*
EWWW – *Engraved Wide Whitewall*

Notice: Suggested retail prices are subject to change. Please see harley-davidson.com for the most current suggested retail prices on any product listed in this catalog. Actual retail prices may vary.

WARNING: Use only Harley-Davidson approved tires. See a Harley-Davidson dealer. Using non-approved tires or mixing approved tires from different manufacturers on the same motorcycle, can adversely affect stability, which could result in death or serious injury.

ORIGINAL EQUIPMENT AND RECOMMENDED REPLACEMENT TIRES

Model Fitment	Stock or Optional Fitment	Tread	Size	Rim Size in Inches	PSI	Sidewall Style	Part Number	Price
VRSC™ – FRONT								
DUNLOP® HARLEY-DAVIDSON® TIRE SERIES								
'02-later VRSC™ models	Stock MY '02-'10	D208F	120/70ZR19	3.00 x 19	36	BW	**43172-01B**	**$226.95**
MICHELIN® HARLEY-DAVIDSON® TIRE SERIES								
'07-'10 VRSCAW	Optional	SCORCHER 11	120/70ZR19	3.00 x 19	36	BW	**43213-11**	**$239.95**
'07-'08 VRSCD	Optional							
'07-later VRSCDX	Stock MY '11-later							
'09-later VRSCF	Stock MY '11-later							
'06 VRSCSE2	Optional							
'07 VRSCX	Optional							
VRSC – REAR								
DUNLOP® HARLEY-DAVIDSON® TIRE SERIES								
'07-'10 VRSCAW	Stock	D419	240/40R18	8.00 x 18	42	BW	**41473-06**	**$289.95**
'07-later VRSCDX	Stock MY '07-'10							
'09-later VRSCF	Stock MY '07-'10							
'06 VRSCSE2	Stock							
'07 VRSCX	Stock							
Replacement Tire for Harley-Davidson Wide Tire Kit P/N 43687-06	Optional							
'02-'08 VRSC (except '06 VRSCSE2, VRSCAW, VRSCDX, VRSCX and VRSCF).	Stock	D207	180/55ZR18	5.50 x 18	38/42	BW	**43173-01**	**$282.95**
MICHELIN® HARLEY-DAVIDSON® TIRE SERIES								
'06 VRSCSE2	Optional	SCORCHER 11	240/40R18	8.00 x 18	42	BW	**43189-11**	**$319.95**
'07-'10 VRSCAW	Optional							
'07-later VRSCDX	Stock MY '11-later							
'07 VRSCX	Optional							
'09-later VRSCF	Stock MY '11-later							

RECOMMENDED REPLACEMENT INNER TUBES AND RIM BANDS

Dunlop® Inner Tubes	Part Number	Price
16" MT/MU90-16 Side Metal Valve	**40558-82**	**$32.95**
16" MT/MU90-16 Center Metal Valve	**40575-05**	**$33.95**
16" 180/65-16 Center Metal Valve	**40592-09**	**$32.95**
17" 130/80-17 Center Metal Valve	**40593-09**	**$30.95**
17" 160/70-180/60-17 Center Metal Valve	**40502-06**	**$32.95**
17" 200/55R17 Center Metal Valve	**41491-08**	**$45.95**
19" MJ/MM90-19 Center Metal Valve with Adapter Ring	**41188-06**	**$28.95**
19" 120/70R19 Center Metal Valve	**41007-07**	**$38.95**
21" MH90-21 Center Metal Valve	**43140-80**	**$27.95**
Dunlop Rim Bands		
16" Center Valve Smooth Profile Rim	**43164-05**	**$4.49**
16" MT90-16 Side Valve Rim	**43147-40**	**$3.95**
16" 180/65-16 Center Valve Rim	**43099-09**	**$6.95**
17" Center Valve Rim	**43101-06**	**$5.49**
17" Center Valve Radical Rim	**40916-08**	**$8.95**
17" 130/80-17 Center Valve Rim	**43341-09A**	**$4.95**
19" Center Valve Rim	**43145-47**	**$3.95**
19" Center Valve Radial Rim	**41996-07**	**$3.95**
21" Center Valve Rim	**43939-89**	**$3.95**

Michelin® Inner Tubes	Part Number	Price
17" Center Metal Valve Fits 17" 160/70-17 and 180/60-17 tire/rim	**41314-10**	**$30.95**
19" Center Metal Valve Fits 19" 100/90-19 tire/rim	**41316-10**	**$25.95**
19" Center Metal Valve Fits VRSC models with 120/10-19 Radial front tires.	**43233-11**	**$24.95**
16" Side Metal Valve Fits 130/90-16, 150/80-16, MT90-16 and MU85-16 tire/rim	**40572-11**	**$31.95**
16" Center Metal Valve Fits 130/90-16, 150/80-16, MT90-16 and MU85-16 tire/rim	**40876-11**	**$31.95**
21" Center Metal Valve Fits 80/90-21 and MH90-21 tire/rim	**40941-12**	**$22.95**
Michelin Rim Bands		
17" Center Valve Rim (4.5" x 17"/18")	**41319-10**	**$5.49**
19" Center Valve Rim (1.6"/2.0" x 18"/19")	**41323-10**	**$3.95**
19" VRSC 120/10-19 Radial Rim (2.15"/3" x 17"/18"/19")	**42039-11**	**$6.95**
16" Side Metal Valve Rim (3" x 16")	**40875-11**	**$3.95**
16" Center Metal Valve Rim (3" x 16")	**40877-11**	**$3.95**
21" Center Metal Valve Rim (1.6"/1.85" x 17"/18"/19")	**40954-12**	**$3.95**

Sidewall Style Key:

BW – *Blackwall*
SWW – *Slim Whitewall*
MWW – *Medium Whitewall*
WWW – *Wide Whitewall*
EWWW – *Engraved Wide Whitewall*

Notice: Suggested retail prices are subject to change. Please see harley-davidson.com for the most current suggested retail prices on any product listed in this catalog. Actual retail prices may vary.

WARNING: Use only Harley-Davidson approved tires. See a Harley-Davidson dealer. Using non-approved tires or mixing approved tires from different manufacturers on the same motorcycle, can adversely affect stability, which could result in death or serious injury.

Model Fitment	Stock or Optional Fitment	Tread	Size	Rim Size in Inches	PSI	Sidewall Style	Part Number	Price
BUELL® – FRONT								
			DUNLOP® BUELL TIRE SERIES					
'06-'09 XB12X	Stock – '06 XB12X, Optional on other Ulysses models	D616F	120/70ZR17	3.50 x 17	36	BW	**G0150.1AKS**	**$198.65**
			PIRRELLI® BUELL TIRE SERIES					
'00-later Blast models	Stock	MT 75	100/80-16	2.50 x 16	34	BW	**G0150.9A7**	**$89.95**
'08-later 1125R and 1125CR	Optional	Scorpion SYNC	120/70ZR17	3.50 x 17	34	BW	**G0150.1AJ**	**$186.95**
'03-later XB models	Stock and Optional fitments, see parts book							
BUELL – REAR								
			PIRRELLI® BUELL TIRE SERIES					
'00-later Blast models	Stock	MT 75	120/80-16	2.75 x 16	36	BW	**G0350.9A7**	**$108.95**

Repair Order Example

For Educational Purposes Only

Harley Davidson Electives

MOTOR HARLEY-DAVIDSON CYCLES

Out	In	Out	In	Out	In	Out	In	Out	In	Out	In

Customer Name: Jane H. Davidson	Make: H-D	Year: 2015	Odometer Reading In: 2578 .
Address: 9755 Delegates Dr	Model: XG500		Odometer Reading Out: 2587 .
City: Orlando	State: FL	Lic No.	Warranty Request No.
Daytime Phone: 123-456-7891			Parts Order No.
Other Phone	Eng No.		Parts Received Date
VIN: 1 H D 4 N A A 1 8 F C 5 0 4 8 1 8			Save Old Parts?

Date In: 5/30/15	
Date Promised	
Date Completed: 5/30/15	
Date Picked Up: 5/30/15	
Technician's Name	
Technician's License No.	

Qty	Part Number	Description of Parts	Ord	Amount	Description of Work	Amount
1	6 5 9 5 8 - 0 4 A	Battery		114.95	Customer states bike does not crank please check	
					Battery and replace if necessary	
					Checked battery and charging system—system	
					Ok—battery failed—needs replaced.	
					0.3 hours to replace battery	24.00

UTMMI does not assume responsibility or accept liability for vehicles and vehicle parts or work performed by students. The proper performance of tasks by students is a slow, methodical process which cannot be accelerated. Student work is performed as an educational experience and is observed by the instructor to ensure that the work is performed properly.

However, instances do occur where work has to be repeated because the student failed to follow instructions or perform the work correctly.

Parts installed are not warranted beyond the warranty given by respective manufactures. No other warranties are given whether expressed or implied.

All work performed in this laboratory is performed for the sole purpose of student learning experience, with no expressed warranty or specific completion time. I hereby authorize the repair work listed hereon, including sublet work to be performed along with the purchase of necessary materials. The staff or students may operate the described vehicle for testing and inspection at owner's risk. An express lien is hereby granted and acknowledged on said vehicle to secure the amount of repairs thereto. I hereby agree to hold the school, its officers, directors, shareholders, agents and employees free from any loss, damages, liability, cost or expense caused in any way that may arise during or as a result of this vehicle being repaired by or used at UTMMI.

Signature _____

ESTIMATES	Original	Revised
Parts		
Labor		
Total		

TOTAL PARTS

No charge shall be made in excess of the estimated cost until the customer is notified and has given his/her consent, unless allowed by state law.

Authorized By: Date: Telephone In Person

LABOR RATE 80 X LABOR HRS .03 = Total Labor 24.00

I have inspected the motor- cycle and the work done meets with my satisfaction.

___ I have had safety-related items of repair explained to me and I have elected not to have them corrected.

Pick Up Date: _____

X_____

Total Parts	114.95
Sub Labor	
Shop Sup	
Tax	7.47
TOTAL	146.42

HD-RO-03312009

WORKSHEET

EXAMPLE

Repair Order

For Educational Purposes Only

Out	In	Out	In	Out	In	Out	In	Out	In	Out	In

Harley Davidson Electives

MOTOR HARLEY-DAVIDSON CYCLES

Customer Name	Make	Year	Odometer Reading In	Date In
Address	Model		Odometer Reading Out	Date Promised
City / State	Lic No.		Warranty Request No.	Date Completed
Daytime Phone			Parts Order No.	Date Picked Up
Other Phone	Eng No.		Parts Received Date	Technician's Name
VIN			Save Old Parts?	Technician's License No.

Qty	Part Number	Description of Parts	Ord	Amount	Description of Work	Amount

UTIMMI does not assume responsibility or accept liability for vehicles and vehicle parts or work performed by students. The proper performance of tasks by students is a slow, methodical process which cannot be accelerated. Student work is performed as an educational experience and is observed by the instructor to ensure that the work is performed properly.

However, instances do occur where work has to be repeated because the student failed to follow instructions or perform the work correctly.

Parts installed are not warranted beyond the warranty given by respective manufactures. No other warranties are given whether expressed or implied.

All work performed in this laboratory is performed for the sole purpose of student learning experience, with no expressed warranty or specific completion time. I hereby authorize the repair work listed hereon, including subcontract work to be performed along with the purchase of necessary materials. The staff or students may operate the described vehicle for testing and inspection at owner's risk. An express lien is hereby granted and acknowledged on said vehicle to secure the amount of repairs thereto. I hereby agree to hold the school, its officers, directors, shareholders, agents and employees free from any loss, damages, liability, cost or expense caused in any way that may arise during or as a result of this vehicle being repaired by or used at UTIMMI.

Signature _____

ESTIMATES	Original	Revised
Parts		
Labor		
Total		

TOTAL PARTS

No charge shall be made in excess of the estimated cost until the customer is notified and has given his/her consent, unless allowed by state law.

Authorized By: Date: Telephone In Person

LABOR RATE ___X LABOR HRS ___ = Total Labor

I have inspected the motor- cycle and the work done meets with my satisfaction.

___ I have had safety-related items of repair explained to me and I have elected not to have them corrected.

Pick Up Date: _____

X_____

Total Parts	
Sub Labor	
Shop Sup	
Tax	
TOTAL	

WORKSHEET

HD-RO-03312009

10 pts

Repair Order

For Educational Purposes Only

Harley Davidson Electives

MOTOR HARLEY-DAVIDSON CYCLES

Customer Name	John Q. Customer	Make H-D	Year 2005
Address	3700 W. Juneau Ave	Model FLSTNI	
City Milwaukee	State WI	Lic No.	
Daytime Phone	555-555-5555		
Other Phone		Eng No.	
VIN	5 H D 1 J D B 1 2 5 Y 0 2 2 7 1 2		

10 Pts

Out	In	Out	In	Out	In	Out	In	Out	In	Out	In

Odometer Reading In	10,371	Date In	6/2/15
Odometer Reading Out	10380	Date Promised	
Warranty Request No.		Date Completed	6/2/15
Parts Order No.		Date Picked Up	6/2/15
Parts Received Date		Technician's Name	
Save Old Parts?		Technician's License No.	

Qty	Part Number	Description of Parts	Ord	Amount
4	6 2 6 0 0 0 3 8	HD 360 SAE 20W50		29.95
1	6 3 7 3 1 - 9 9 A	Oil Filter Black		10.95
2	6 2 6 0 0 0 0 4	Formula + Transmission, Primary Chaincase		17. 90
1	1 7 3 6 1 - 0 5	Gasket Service Kit		17.71
2	3 2 3 6 9 - 0 4	Spark Plugs		7.90
		10 pts		

Description of Work	Amount
Customer states please complete 10,000 mile	
10 pts	
10,000 mile service = 4. 3 hrs	344.00

UTIMMI does not assume responsibility or accept liability for vehicles and vehicle parts or work performed by students. The proper performance of tasks by students is a slow, methodical process which cannot be accelerated. Student work is performed as an educational experience and is observed by the instructor to ensure that the work is performed properly.

However, instances do occur where work has to be repeated because the student failed to follow instructions or perform the work correctly.

Parts installed are not warranted beyond the warranty given by respective manufactures. No other warranties are given whether expressed or implied.

All work performed in this laboratory is performed for the sole purpose of student learning experience, with no expressed warranty or specific completion time. I hereby authorize the repair work listed hereon, including subrel work to be performed along with the purchase of necessary materials. The staff or students may operate the described vehicle for testing and inspection at owner's risk. An express lien is hereby granted and acknowledged on said vehicle to secure the amount of repairs thereto. I hereby agree to hold the school, its officers, directors, shareholders, agents and employees free from any loss, damages, liability, cost or expense caused in any way that may arise during or as a result of this vehicle being repaired by or used at UTIMMI.

Signature _____

ESTIMATES	Original	Revised
Parts		
Labor		
Total		

TOTAL PARTS

No charge shall be made in excess of the estimated cost until the customer is notified and has given his/her consent, unless allowed by state law.

Authorized By: Date: Telephone In Person

LABOR RATE 80 LABOR HRS 4.3 = Total Labor 344.00

I have inspected the motor- cycle and the work done meets with my satisfaction.

___ I have had safety-related items of repair explained to me and I have elected not to have them corrected.

Pick Up Date: _____

X_____

10 pts

Total Parts	84.41
Sub Labor	
Shop Sup	
Tax	5.49
TOTAL	433.90

HD-RO-03312009

WORKSHEET

Harley-Davidson Models

JOB TIME/CODE MANUAL

2005

© 2004 H-D.
ALL RIGHTS RESERVED

Binder 99998-88
Contents 99997-05

CMI - 1.5M - 07/04

Printed in U.S.A.

Unless otherwise specified, Job Times shown include all operations necessary to complete the listed job.

2005 SOFTAIL MODELS (EXCEPT SPRINGERS)

Table 1-1. Service

ITEM	DESCRIPTION	LABOR CODE	MODELS				
			BJY, BWB, JHB	BNY, JDB	BHY, BTY, BVB, JAB	BMY, BXB, JGB	BSY, JBB
NEW							
Set-up and pre-delivery		---	2.1	2.1	2.1	2.1	2.1
1000 mile service		---	2.0	2.0	2.0	2.0	2.0
REGULAR							
5,000 mile maintenance		---	2.0	2.0	2.0	2.0	2.0
10,000 mile maintenance		---	4.3	4.3	4.3	4.3	4.3

Table 1-2. Chassis

ITEM	DESCRIPTION	LABOR CODE	MODELS				
			BJY, BWB, JHB	BNY,JDB	BHY, BTY, BVB, JAB	BMY, BXB, JGB	BSY, JBB
DRIVE							
Adjust secondary belt		---	0.3	0.3	0.3	0.3	0.3
Replace secondary belt		2011	2.6	2.6	2.6	2.6	2.6
Replace rear wheel sprocket		2021	0.8	0.8	0.8	0.8	0.8
WHEELS							
Replace tire - includes balancing	front	2106	0.5	0.5	0.5	0.5	0.5
	rear	2111	0.6	0.6	0.6	1.1	1.1
Replace wheel assembly - includes disc and sprocket exchange and balancing	front	2113	0.8	0.8	0.8	0.8	0.8
	rear	2114	0.9	0.9	0.9	1.1	1.1
Replace rim, hub or spokes	front	2116	2.3	2.3	2.3	---	2.3
	rear	2121	2.3	2.3	2.3	---	---

BJY	FLSTC	BNY	FLSTN	BVB	FXST-I	BMY	FLSTF	BSY	FXSTD
BWB	FLSTC-I	JDB	FLSTN-I	BTY	FXSTB	BXB	FLSTF-I	JBB	FXSTD-I
JHB	FLSTC-I SHRINE	BHY	FXST	JAB	FXSTB-I	JGB	FLSTF-I SHRINE		

SOFTAIL MODELS

Table 56. Regular Service Intervals: 2005 Softail Models

ITEM SERVICED	PROCEDURE	1000 MI. 1600 KM	5000 MI. 8000 KM	10,000 MI. 16,000 KM	15,000 MI. 24,000 KM	20,000 MI. 32,000 KM	25,000 MI. 40,000 KM	NOTES
Engine oil and filter	Replace	X	X	X	X	X	X	
Oil lines and brake system	Inspect for leaks	X	X	X	X	X	X	1
Air cleaner	Inspect, service as required	X	X	X	X	X	X	
Tires	Check pressure, inspect tread	X	X	X	X	X	X	
Wheel spokes	Check tightness	X	X			X		1, 4
Primary chaincase lubricant	Replace	X	X	X	X	X	X	
Transmission lubricant	Replace	X	X	X	X	X	X	
Clutch	Check adjustment	X	X	X	X	X	X	1
Primary chain	Check adjustment	X	X	X	X	X	X	
Rear belt and sprockets	Inspect, adjust belt	X	X	X	X	X	X	1
Throttle, brake, enrichener and clutch controls	Check, adjust and lubricate	X	X	X	X	X	X	1, 4
Jiffy stand	Inspect and lubricate	X		X		X		1
Fuel valve, lines and fittings	Inspect for leaks	X	X	X	X	X	X	1, 4
Fuel tank filter screen	Clean (EFI: replace)						X	1
Brake fluid	Check levels and condition	X	X	X	X	X	X	
Brake pads and discs	Inspect for wear	X	X	X	X	X	X	
Spark plugs	Inspect	X	X		X		X	
Spark plugs	Replace			X		X		
Electrical equipment and switches	Check operation	X	X	X	X	X	X	
Engine idle speed	Check adjustment	X	X	X	X	X	X	1
Front fork oil	Replace					X		1
Steering head bearings (Softail Models)	Adjust	X		X		X		1
Steering head bearings (Softail Models)	Lubricate			X		X		2
Steering head bearings (Springer models)		Adjust and lubricate every 2500 miles (4000 kilometers).						1, 5
Rear fork bearings (if applicable)	Repack					X		1
Windshield bushings	Inspect			X		X		1
Springer rocker bearings	Adjust	X		X		X		1
Fuel door, Tour-Pak, saddlebags	Lubricate hinges and latches	X	X	X	X	X		
Critical fasteners	Check tightness	X		X		X		1
Battery	Check battery and clean connections	Perform annually.						3
Road test	Verify component and system functions	X	X	X	X	X	X	

NOTES:

1. Should be performed by an authorized Harley-Davidson dealer, unless you have the proper tools, service data and are mechanically qualified.
2. Disassemble, lubricate and inspect every 30,000 miles (48,000 kilometers).
3. Perform annually.
4. Not all vehicles are equipped with an enrichener, fuel valve or spoke wheels. Consult appropriate topic in service manual.
5. Disassemble, lubricate and inspect every 20,000 miles (32,000 kilometers).

Oil Filters

A. SUPERPREMIUM5™ OIL FILTERS – 5 MICRON

Utilizing advances in synthetic media technology, the SuperPremium5™ Oil Filters are Tested-Certified to provide filtration to retain dust, soot and other solid matter with low internal pressure drop. Filter also includes internal pressure relief and anti-drain back valves.

Fits '99-later Twin Cam and Evolution® models (except '08-'13 XR) and can be used as an upgrade for any motorcycle that requires Oil Filter P/N 63796-77A, 63805-80A, 63812-90 or 63813-90.

63798-99A	Chrome.	**$14.95**
63731-99A	Black.	**$10.95**

SuperPremium10 Oil Filter – 10 Micron *(not shown)*
Fits '02-later VRSC™ models.

63793-01K	Black.	**$9.95**

B. GENUINE HARLEY-DAVIDSON® OIL FILTERS

Filter features cured resin impregnated paper which removes harmful foreign particles from the oil. End caps and thermal setting adhesive provide positive seals, preventing bypassing of contaminant-laden oil.

Spin-On
Fits all XB and Buell models.

63806-00Y	Black.	**$7.95**

Fits '15-later XG models.

62700045		**$7.95**

Fits '91-98 Dyna® models.

63812-90	Black, Extra Long.	**$8.95**
63813-90	Chrome, Extra Long.	**$12.95**

Fits late '82-'84 FLH-80 Classics, '82-'86 FXWG, FXSB, FXEF and '79-early '84 XL models.

63782-80	Chrome, Short.	**$11.95**
63810-80A	Black, Short.	**$8.95**

Fits '80-'98 FLT, FLHT, FLHR, '82-'94 FXR, '84-'98 Softail®, '84-'95 FXRP, FLHTP, late '84-later XL and '08-'13 XR models.

63796-77A	Chrome, Long.	**$10.95**
63805-80A	Black, Long.	**$8.95**

CLASSIC MOTOR PARTS OIL FILTERS *(not shown)*
Quality filters at a great price. Replaces P/N 63840-53 or 63835-87T with a cartridge type filter and spring.

62700055	In Tank Oil Filter.	**$10.95**

DEFINITIVE5 FILTER ELEMENT *(not shown)*
TESTED-CERTIFIED Synthetic Filter media provides nominal 5 micron filtration. Increased retained capacity for dust, soot and other solid matter. Low internal pressure drop.

63834-07 **$13.95**
Fits models equipped with DEFINITIVE5 Filtration System.

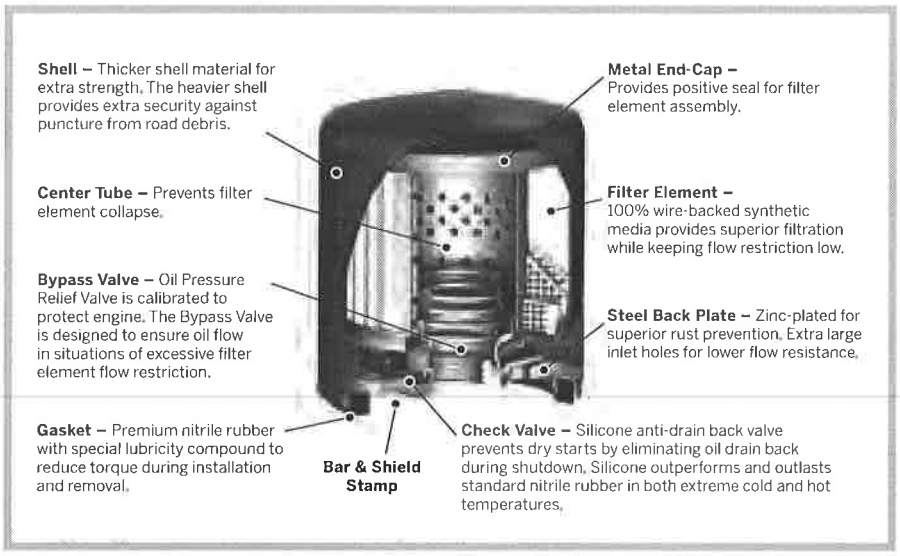

A. SUPERPREMIUM5 OIL FILTERS

A. SUPERPREMIUM5 OIL FILTERS

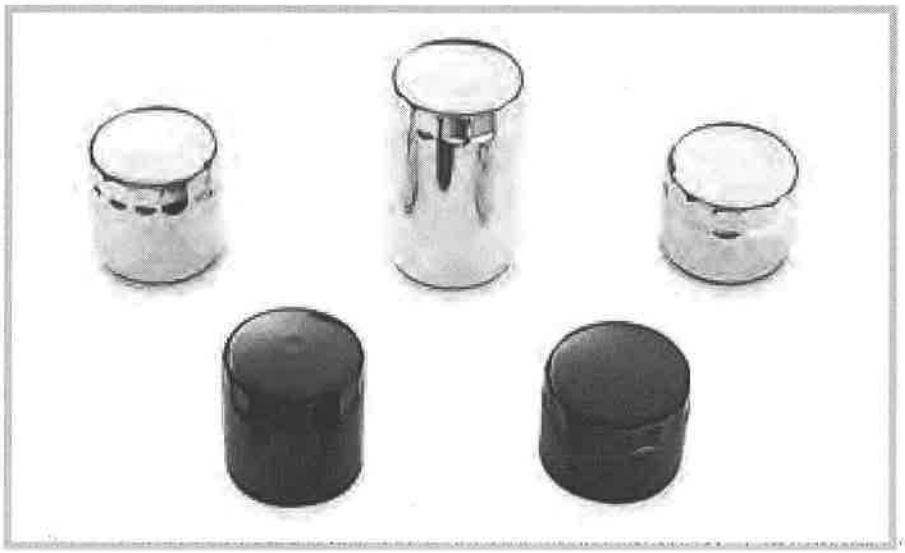

B. GENUINE HARLEY-DAVIDSON OIL FILTERS

Notice: The prices appearing in this catalog are the manufacturer's suggested retail prices. Actual retail prices may vary.

SkillsUSA
2015 Contest Projects

Nail Care

Click the “Print this Section” button above to automatically print the specifications for this contest. Make sure your printer is turned on before pressing the button.

2015 SKILLSUSA-NAIL CARE CONTEST

To align the contest within industry practice, we have gone away from wraps and replaced that application with light-cured gels.

Contestants should come prepared to do the following:

1. A 3-5 minute mock nail care consultation on the benefits of natural nail care. Props may be used. The presentation should include the following points: 1) Recommended natural nail care services; 2) Results the client should expect; 3) The home care products the client would need to purchase and use to obtain these results.
2. A basic pedicure on one foot of their model. Procedures should include, but not limited to clipping & shaping toenails, pushing back cuticles, cleaning under toenails, refining skin and polishing
3. All five fingers of the model's right hand are to be sculpted with acrylic using forms, no tips, in a two-tone/French-manicure (pink & white) technique. 2 or more colors of acrylic may be used.
4. All five fingers of the model's left hand are to have nail tips applied and overlaid with a light-cured gel. Any type of tip may be used. For the 2013 contest, the contestants will be judged, however no scores will be included in the final tally.
5. A 50 question, multiple choice exam on all aspects of nail care.
6. Two coats of Dark Red Crème Lacquer/Polish is to be applied to the model's right hand
7. Nail art is to be applied to all 5 fingers of the model's left hand. A specific theme is to be carried through on all 5 fingers and in a written description. Contestant must have written and submitted a description of the theme they intend to create at contest check in. Themes should be typewritten, may be decorated and must be contained in the plastic sleeve. Diagrams of the art you intend to create can be used, however, are limited to the finished product and may not be step by step instructions. Once all judging is complete, props may be used to enhance art during the parade of models. All nail art must be created using polishes, lacquers and/or paint Only!

Time limits: three to five minutes for oral presentation, one hour for pedicure, one hour for acrylic, one hour for tips and light-cured gel, 30 minutes for written examination, and 90 minutes for polish and flat nail art applications. All segments of work must be completed in the specified time during competition. (For example, during the tip and light-cured gel segment, no work may be completed or started on the acrylic sculptured, nail art or polish application.)

CONTEST INSTRUCTIONS / SCHEDULE

Wednesday, June 24, 2015

8:00 am –1:00 pm: Secondary Contestants w/ Models

8:00 – 8:30: Check in & set up for Pedicure (turn in CD, Resume and/or Art Theme)
8:30 – 8:45: Prejudging of Models
8:45 – 9:45: Perform Pedicure
9:45 – 10:15: Judging of Pedicures
10:15 – 1:00 Oral Presentations

1:00 pm –5:00 pm: Post-Secondary Contestants w/ Models

1:00 – 1:30: Check in & set up for Pedicure (turn in CD, Resume and/or Art Theme)
1:30 – 1:45: Prejudging of Models
1:45 – 2:45: Perform Pedicure
2:45 – 3:15: Judging of Pedicures
3:15 – 5:00 Oral Presentations

Pedicures

Contestants will set up for and perform a basic pedicure on one foot of their model. Procedures should include, but not limited to clipping & shaping toenails, pushing back cuticles, cleaning under toenails, refining skin and polishing. Based on industry standards, the following will be evaluated:

- Safe & sanitary procedures and handling of the foot
- End result: Toenail length & shape, polish application, skin quality & appearance and cuticle involvement

Oral Professional Development Assessment

Contestants will have 3-4 minutes to do a mock consultation on the benefits of Natural Nail Care. You can direct your presentation to the judges as if they were a client who came to you for a consultation. Props may be used. The presentation should cover the following points:

- Recommended natural nail care services.
- Results the client should expect.
- The home care products the client would need to purchase and use to obtain these results.

Thursday, June 25, 2015

8:00-9:00 am: Contestant & Model Check In

If you haven't previously turned in your CD, Resume and/or Art Theme, you must at this time. Once checked in, you will be escorted to your seat and begin set up for the acrylic application ONLY. At this time the Committee will be conducting a kit check to make sure that you have all proper items. All cell phones must be turned off at this time.

8:30 am: Bathroom Break for Contestants ONLY

You may wash hands, fill water bottles, etc. at this time. There will be antibacterial soap at you station for your use. Prejudging of models will take place at this time.

9:00-10:00 am: Acrylic Nail Application

1 hour allotted – All five fingers of the model's right hand are to be sculpted with forms, no tips, using the two-tone/French-manicure technique. Based on salon quality nails, the following will be evaluated:

- Acrylic Application: product control, clarity/no bubbles, smile line, c-curve, arch, thinness and continuity.
- Finished Appearance: smoothness, shape & length consistent finger to finger and proportionate to hand, high-gloss shine and cuticle involvement.

10:00-10:15 am: Reset Station

Contestant will clean up from Acrylic Application and set up for Tip and Gel Application.

10:15-11:15 am: Nail Tip & Gel Application

1 hour allotted – All five fingers of the model's left hand are to have nail tips applied and overlaid with a light-cured gel system. Based on salon quality nails, the following will be evaluated:

- Tip Application: fit and alignment.
- Gel Application: product control, clarity/no bubbles, c-curve, arch, thinness and continuity.
- Finished Appearance: clarity, smoothness, shape & length consistent finger to finger and proportionate to hand, high-gloss shine and cuticle involvement.

11:30-12:00 pm: Judging of Acrylic and Tip & Gel & Contestant Break

12:15-12:45 pm: Written Examination & Model Break

Test will consist of 50 multiple-choice questions covering aspects of nail care not physically evaluated during the contest. Those subjects include but not limited to sanitation and disinfection, pedicures and light-cured gels.

1:00-2:30 pm: Nail Art & Polish Application

1.5 hours Allotted for Lacquer & Nail Art Application

Two coats of Dark Red Crème Lacquer/Polish is to be applied to the model's right hand. The following will be evaluated:

- Neatness, coverage, evenness and cuticle involvement.

Nail art is to be applied to all 5 fingers of the model's left hand. A specific theme is to be carried through on all 5 fingers and in a written description. Contestant must have written and submitted a description of the theme they intend to create at contest check in. Themes should be typewritten, may be decorated and must be contained in the plastic sleeve. Diagrams of the art you intend to create can be used, however, are limited to the finished product and may not be step by step instructions. Once all judging is complete, props may be used to enhance art during the parade of models. All nail art must be created using polishes, lacquers and/or paint Only! The following will be evaluated:

- Creativity; theme, follow through of theme, artist expression, and color coordination.
- Level of Difficulty; complexity of design.
- Precision; neatness and clarity of lines.

2:45-3:15 pm: Judging of Wearable Nail Art & Polish

3:30 pm: Parade of Models

Once parade has concluded, make sure to finish cleaning up your contest area and turn in your evaluation of the contest.

4:00 pm: Contest Debriefing at Contest Site

Immediately Following Contest, we will have a debriefing in the contest area.

SPECIAL INSTRUCTIONS (INCLUDING GUIDELINES)

1. All contestants must bring a model for the competition.
2. Contestants are not permitted to touch their models before the competition begins or between segments.
3. Conversation between contestant & model is limited. The only conversation allowed is if the contestant needs to ask the model to reposition her hand or arm. Communication with observers, judges and other contestants is prohibited during the contest. If you have a question, raise your hand and a committee member will help you.
4. Time limits: 1 hour for pedicure, 1 hour for acrylic, 1 hour for tips and wrap, .5 hours for written examination and 1.5 hours for polish and flat nail art applications. All segments of work must be completed in the specified time during competition. (i.e., during the tip and wrap segment, no work may be completed or started on the sculptured, nail art or polish application.)
5. No eating, drinking, smoking or gum chewing is allowed during the competition. Lunch will be provided for contestant and model.
6. All contestants and models must be escorted to the bathroom by a Technical or Educational Committee member. Bathroom breaks will take place after judging segments.
7. Penalty points may be taken for the following:
   a) Any rule not followed with NO exceptions!
   b) Leaving competition area before completion of model (applies to both contestant and model) without proper escort.
   c) Unauthorized use of a product that is not allowed or that doesn't appear in the listing or use of any product that appears to have been altered.
8. Each Contestant must turn in a digital photo on a CD of the art they will be creating, a written description of their nail art and a resume. All three items must be turned in by 9:00 am on Thursday.

SAMPLE DONOR THANK YOU

(Date)

Dear Industry Sponsor,

My name is (Insert Name) and I attend (insert school name). I was fortunate to compete at SkillsUSA National Championships in the Nail Care contest.

I would like to thank you for your generous gifts and support. Your commitment to helping SkillsUSA is sincerely appreciated. Words could never tell you what your donations and support to the Nail competition has meant to me. Your company has truly enriched me through your kindness and generosity.

I look forward to using your products.

With sincere appreciation,

(Sign Your Name)

SAMPLE VOLUNTEER THANK YOU

(Date)

Dear SkillsUSA Volunteer,

My Name is (Insert Name) and I attend (Insert School Name). I was fortunate to compete at this year's SkillsUSA National Championships in the Nail Care contest.

Words could never tell you what your time and support has meant to me. It is people like you that make this contest possible. You are a great example of commitment to one's industry. Thank you for all you do for me and my fellow students. Your commitment to helping SkillsUSA is sincerely appreciated.

I look forward to a rewarding career in the beauty industry.

With sincere appreciation,

(Sign Your Name)

SKILLSUSA CHAMPIONSHIPS NAIL CARE CONTEST EVALUATION

What did you like about the Nail Care Contest?

What would you change about the Nail Care Contest?

Additional Comments.

OVERALL RATING OF CONTEST

❒ Excellent ❒ Very Good ❒ Good ❒ Fair ❒ Poor

SkillsUSA
2015 Contest Projects

Nurse Assisting

Click the “Print this Section” button above to automatically print the specifications for this contest. Make sure your printer is turned on before pressing the button.

Judge Initials _____ Contestant Number _____

SkillsUSA Championships
2015

Adult CPR w AED

Points earned _____/out of 145 = _____%

1. Places manikin on firm surface in supine position	5		
2. Checks scene safety	5		
3. Checks responsiveness and signs of consciousness	5		
3. Activates EMS system	5		
5. Administers chest compressions as follows:			
a. Places heel of hand on lower half of sternum	5		
b. Gives compressions at a rate of 100 per minute	5		
c. Compresses chest to 2 inches, fast and hard	5		
6. Gives two ventilations after every thirty compressions:	5		
a. Opens airway, using head tilt/chin lift method	5		
b. Looks, listens and feels for respirations for 5-10 seconds	5		
c. Gives 2 slow full breaths	5		
7. Repeats cycle of 30:2 for 2 minutes	5		
8. Checks pulse and breathing for 5-10 seconds	5		
****Tell contestant that patient has no pulse and respirations.****			
9. Properly verbalizes what should be done if no pulse.	5		
10. Uses AED at appropriate time	5		
a. Gets AED after one minute of cycles	5		
b. Properly places pads	5		
c. Listens and follows instructions of AED	5		
d. Continues with CPR as instructed without delay	5		
e. Continues to follow AED instructions until told by judge to do otherwise	5		
****Tell contestant that patient has a pulse and respirations.****			
10. Positions patient in recovery position	5		
11. Stays with person until help arrives	5		
12. Attitude:			
a. toward patient	5		
b. toward supervisors (judges)	5		
c. toward task	5		
13. Communication skills:			
a. facial expressions	5		
b. ability to listen	5		
c. interprets/implements oral/written directions	5		
14. Safety measures:			
a. Utilizes safety precautions for patient & self	5		
TOTAL	145		

JUDGE COMMENTS:

Judge Initials _____ Contestant Number _____

SkillsUSA Championships
2015

Handwashing and Gloving

Points earned _____/out of 195 = _____**%**

Performance Points	*Pts. Poss.*	*Pts. Earned*	*Remarks*
1. Assembled equipment (soap, towels, orange stick/nail file, wastebasket - collects missing items)	5		
2. Pushed watch up arm 4 to 5 inches. If uniform sleeves were long, pushed them up.	5		
3. Stood so that clothes did not touch the sink.	5		
4. Stood so the soap and faucet were easy to reach.	5		
5. Did not touch inside of sink at any time.	5		
6. Turned on and adjusted the water until it felt warm.	5		
7. Wet wrists and hands. Kept hands lower than elbows.	5		
8. Wet the area 3 to 4 inches above the wrists.	5		
9. Applied about 1 teaspoon of soap to hands.	5		
10. Rubbed palms together and interlaced fingers to work up a good lather for at least 15 seconds.	5		
11. Washed each hand and wrist thoroughly.	5		
12. Cleaned well between fingers, all the way to tips	5		
13. Cleaned top of both hands, covering all surfaces	5		
14. Cleaned under fingernails:			
a. rubbed fingertips against palms	5		
b. cleaned under fingernails with nail file or orange stick	5		
15. Rinsed wrists and hands well. Water flowed from the wrists to fingertips.	5		
16. Rinsed thoroughly, removed all soap	5		
17. Dried wrists and hands with a clean, dry paper towel.	5		
18. Patted dry starting at fingertips.	5		
19. Kept fingertips below wrists while drying.	5		
20. Discarded the paper towels into the wastebasket.	5		

21. Turned off faucets with clean, dry paper towels.	5		
22. Discarded paper towels into the wastebasket.	5		
23. Put on gloves	5		
REMOVES GLOVES:			
24. Touched outside of glove with outside of glove only	5		
25. Grasped outside of glove just above the cuff.	5		
26. Pulled glove down over hand so it was inside out	5		
27. Contaminated part of glove does not come into contact with skin	5		
28. Held removed glove with other gloved hand	5		
29. Reached inside the other glove with the fingers of ungloved hand	5		
30. Pulled glove down, inside out, over hand and other glove	5		
31. Contaminated part of glove did not come into contact with skin	5		
31. Removed gloves without snapping/popping gloves	5		
32. Discarded gloves in proper receptacle	5		
33. Hand hygiene (may verbalize)	5		
ATTITUDE			
a. toward supervisors (judges)	5		
b. toward task	5		
COMMUNICATION SKILLS			
a. facial expressions	2		
b. ability to listen	2		
c. interprets/implements oral/written directions	2		
d. accuracy of oral/written terminology	2		
SPEED IN COMPLETION OF TASK			
a. completed within alloted time	2		
Total	195		

JUDGE COMMENTS:

SKILLSUSA CHAMPIONSHIPS
2015

INSTRUCTION SHEET FOR CONTESTANT

HANDWASHING AND GLOVE APPLICATION/REMOVAL

ASSIGNMENT:

1. Properly wash your hands
2. Properly apply gloves
3. Properly remove gloves

TIME TO COMPLETE SKILL:

5 minutes
You will be informed with 2 minutes remaining

EQUIPMENT:

All equipment you will need is in the station area.
Please clean and replace equipment.

SITUATION:

You will demonstrate proper hand hygiene technique followed by complete glove application and removal steps.

*****Hereafter, you will be expected to verbalize hand hygiene, at proper times during each station. You may still apply and remove gloves when needed.

Contestant Number _____

Contestant Number _____

Contestant Number _____

Contestant Number _____

Contestant Number _____

Contestant Number _____

Contestant Number _____

Contestant Number _____

Contestant Number _____

Contestant Number _____

Contestant Number _____

Contestant Number _____

Contestant Number _____

Contestant Number _____

Contestant Number _____

Contestant Number _____

Contestant Number _____

Contestant Number _____

Contestant Number _____

Judge's Initials _____

PLEASE LEAVE THIS SHEET WITH THE JUDGE WHEN COMPLETED TASK AT THIS STATION.

NURSE ASSISTING
SKILLSUSA CHAMPIONSHIPS
2015

INSTRUCTION SHEET FOR CONTESTANT

ASSIGNMENT:	Perform Adult CPR and use AED when appropriate. Perform for 2 minutes and reassess. Follow prompts from the judge.
TIME TO COMPLETE SKILL:	10 minutes You will be informed with 3 minutes remaining
EQUIPMENT:	All equipment you will need is in the station area. Please clean and replace equipment.
SITUATION:	You find the ADULT patient unresponsive on the floor.

Contestant Number _____	Contestant Number _____
Contestant Number _____	Contestant Number _____
Contestant Number _____	Contestant Number _____
Contestant Number _____	Contestant Number _____
Contestant Number _____	Contestant Number _____
Contestant Number _____	Contestant Number _____
Contestant Number _____	Contestant Number _____
Contestant Number _____	Contestant Number _____
Contestant Number _____	Contestant Number _____
Contestant Number _____	Contestant Number _____

Judge's Initials _____

PLEASE LEAVE THIS SHEET WITH THE JUDGE WHEN COMPLETED TASK AT THIS STATION.

SKILLSUSA CHAMPIONSHIPS
2015

INSTRUCTION SHEET FOR CONTESTANT

ASSIGNMENT:	Measure Pulse and Blood Pressure
TIME TO COMPLETE SKILL:	10 minutes You will be informed with 3 minutes remaining
EQUIPMENT:	All equipment you will need is in the station area. Please clean and replace equipment.
SITUATION:	Mrs. Black is a 58-year-old female admitted with headaches. You will take her pulse and blood pressure.

Contestant Number _____	Contestant Number _____
Contestant Number _____	Contestant Number _____
Contestant Number _____	Contestant Number _____
Contestant Number _____	Contestant Number _____
Contestant Number _____	Contestant Number _____
Contestant Number _____	Contestant Number _____
Contestant Number _____	Contestant Number _____
Contestant Number _____	Contestant Number _____
Contestant Number _____	Contestant Number _____
Contestant Number _____	Contestant Number _____

Judge's Initials _____

PLEASE LEAVE THIS SHEET WITH THE JUDGE WHEN COMPLETED TASK AT THIS STATION.

SKILLSUSA CHAMPIONSHIPS
2015

INSTRUCTION SHEET FOR CONTESTANT

ASSIGNMENT: Participate in job interview
Assessment of resume

TIME TO COMPLETE SKILL: 5 minutes for interview TOTAL TIME UP TO 10 minutes

Contestant Number _____

Contestant Number _____

Contestant Number _____

Contestant Number _____

Contestant Number _____

Contestant Number _____

Contestant Number _____

Contestant Number _____

Contestant Number _____

Contestant Number _____

Contestant Number _____

Contestant Number _____

Contestant Number _____

Contestant Number _____

Contestant Number _____

Contestant Number _____

Contestant Number _____

Contestant Number _____

Contestant Number _____

Judge's Initials _____

PLEASE LEAVE THIS SHEET WITH THE JUDGE WHEN COMPLETED TASK AT THIS STATION.

Judge Initials _____ Contestant Number _____

SkillsUSA Championships
2015

Job Interview and Professional Appearance

Points earned _____/out of 90 = _____**%**

JOB INTERVIEW			
1. Dresses appropriately for interview			
a. Uniform is neat and clean	5		
b. Hair is orderly and pulled back from face	5		
c. Minimal amount of make-up/clean shaven	5		
d. Minimal amount of jewelry is worn	5		
e. Shoes are appropriate	5		
2. Introduces self and shakes hands firmly if indicated	5		
3. Refers to employer by name	5		
4. Sits correctly with good posture	5		
5. Listens closely to employer's questions/comments	5		
6. Speaks slowly and clearly without mumbling	5		
7. Smiles but avoids excessive laughter or giggling	5		
8. Maintains eye contact with employer	5		
9. Avoids mannerisms during interview	5		
10. Uses correct English and avoids slang terms	5		
11. Uses correct manners and acts politely	5		
12. Avoids smoking, chewing gum, eating candy, etc.	1		
13. Asks questions pertaining to job responsibility and avoids questioning fringe benefits, raises, etc.	4		
14. Thanks employer for the interview at the end	5		
15. Shakes hands firmly if indicated	5		
Total	90		

JUDGE COMMENTS:

Judge Initials _____ Contestant Number _____

SkillsUSA Championships
2015

Job Interview and Resume

Points earned _____/out of 135 = _____%

JOB INTERVIEW			
1. Dresses appropriately for interview			
a. Uniform is neat and clean	5		
b. Hair is orderly and pulled back from face	5		
c. Minimal amount of make-up/clean shaven	5		
d. Minimal amount of jewelry is worn	5		
e. Shoes are appropriate	5		
2. Introduces self and shakes hands firmly if indicated	5		
3. Refers to employer by name	5		
4. Sits correctly with good posture	5		
5. Listens closely to employer's questions/comments	5		
6. Speaks slowly and clearly without mumbling	5		
7. Smiles but avoids excessive laughter or giggling	5		
8. Maintains eye contact with employer	5		
9. Avoids mannerisms during interview	5		
10. Uses correct English and avoids slang terms	5		
11. Uses correct manners and acts politely	5		
12. Avoids smoking, chewing gum, eating candy, etc.	1		
13. Asks questions pertaining to job responsibility and avoids questioning fringe benefits, raises, etc.	4		
14. Thanks employer for the interview at the end	5		
15. Shakes hands firmly if indicated	5		
RESUME			
16. Uses good quality paper	5		
17. Types all information neatly and accurately	5		
18. Follows consistent format/spacing throughout	5		
19. Includes all of the following information:			
a. Personal identification: name, address, telephone	5		

b. Employment objective	5		
c. Educational background: name and address of school, special courses, or training	5		
d. Work or employment experience: name/address of employers, dates employed, job title, description of duties, in order from most recent backward	5		
e. Skills and specific knowledge	5		
f. Other activities; organizations, offices held, awards, volunteer work, hobbies, interests	5		
g. References: full name, title, and address or states "References will be furnished on request"	5		
20. Spells all words correctly	5		
21. Punctuates all information correctly	5		
Total	150		

JUDGE COMMENTS:

Judge Initials _____ Contestant Number _____

SkillsUSA Championships
2015

Measuring and Recording Blood Pressure and Pulse

Points earned _____/out of 195 = _____**%**

	Pts. Poss.	*Pts. Earned*	*Remarks*
Performance Points			
1. Assembles equipment for taking Vital Signs	5		
2. Performs hand hygiene	5		
3. Knocks on door, introduces self, and identifies patient using two identifiers, explains procedure	5		
4. Provides privacy	5		
5. Obtains patient permission	5		
6. Assures patient is comfortable	5		
PULSE			
7. Places fingers correctly for counting pulse	5		
8. Counts pulse for at least 30 seconds	5		
9. Obtains correct count to +/- 2 beats per minute	5		
10. Notes rhythm and volume	5		
BLOOD PRESSURE			
16. Cleans stethoscope earpeices and bell/disk with alcohol	5		
17. Applies BP cuff correctly	5		
18. Places stethoscope in ears correctly	5		
19. Locates brachial artery and places bell correctly	5		
20. Inflates cuff properly	5		
21. Reads pressure to +/- 2 mm Hg	5		
22. Recognizes abnormal V/S measurements and reports immediately	5		
23. Cleans stethoscope earpeices and bell/disk with alcohol	5		
24. Observes patient for comfort	5		
25. Observes checkpoints before leaving:			
a. Lowers bed to lowest level	5		
b. Places call signal and supplies within reach	5		
c. Opens curtain	5		
d. Leaves area neat and clean	5		
26. Hand hygiene (may verbalize)	5		
27. Reports any abnormal findings	5		
28. Organization of work:			

a. arrives at contest ready to begin skill problem	5		
b. reads problems/checks assumptions/questions	5		
c. obtains necessary equip to complete problem	5		
d. organizes equip/solves problem conveniently	5		
29 Attitude:			
a. toward patient	5		
b. toward supervisors (judges)	5		
c. toward task	5		
30. Communication skills:			
a. facial expressions	5		
b. ability to listen	5		
c. attempt to lower patient anxiety	5		
d. interprets/implements oral/written directions	5		
e. accuracy of oral/written terminology	5		
31. Safety measures:			
a. Utilizes safety precautions for patient & self	5		
32. Speed in completion of task:			
a. completed within alloted time	5		
Total	195		

Judge Initials _____ Contestant Number _____

SkillsUSA Championships
2015

Range of Motion - Upper Extremity

Points earned _____/out of 195 = _____%

Performance Points	*Pts. Poss.*	*Pts. Earned*	*Remarks*
• Protected person's rights during procedure.	3		
• Handled person gently during procedure.	3		
• Knocked before entering person's room.	3		
• Addressed person by name.	3		
• Introduced yourself by name and title.	3		
• Explained procedure to person before starting and during the procedure.	3		
Pre-Procedure			
Practiced hand hygiene.	3		
Identified the person using TWO identifiers.	3		
Checked the ID bracelet.	3		
Obtained a bath blanket.	3		
Provided for privacy.	3		
Raised the bed for body mechanics.	3		
Bed rails were up if used.	3		
PROCEDURE			
Lowered the bed rail near you if up.	3		
Positioned the person supine.	3		
Moved the person closer to you if needed.	3		
Covered person with blanket.	3		
Folded top linens to foot of bed.	3		
SHOULDER			
Supported the wrist and elbow properly.	3		
FLEXION - raised arm straight in front and over head.	3		
EXTENSION - brought arm down to the side.	3		
ABDUCTION - moved straight arm away from side of body.	3		
ADDUCTION - moved straight arm to side of the body.	3		
INTERNAL ROTATION - bent elbow. Placed it at same level as shoulder.	3		
Moved forearm down toward body.	3		
EXTERNAL ROTATION - moved forearm toward head. (Scarecrow)	3		
"Repeated exercises 5 times or according to care plan."	3		
ELBOW			
Supported the wrist and elbow properly.	3		
FLEXION - bent arm so the same-side shoulder was	3		
EXTENSION - straightened the arm.	3		
"Repeated exercises 5 times or according to care plan."	3		

FOREARM			
Continued supporting wrist and elbow.	3		
PRONATION - turned hand so palm was up	3		
SUPINATION - turned hand so palm was up.	3		
"Repeated exercises 5 times or according to care plan."	3		
WRIST			
Supported the wrist and elbow properly.	3		
FLEXION - bent hand down.	3		
EXTENSION - straightened hand.	3		
HYPEREXTENSION - bent the hand back.	3		
RADIAL FLEXION - turned the hand toward thumb.	3		
ULNAR FLEXION - turned hand toward little finger	3		
"Repeated exercises 5 times or according to care plan."	3		
THUMB			
Held person's hand with one hand. Held thumb with other hand.	3		
ABDUCTION - moved thumb out from inner part of	3		
ADDUCTION - moved thumb back next to index finger.	3		
OPPOSITION - touched each fingertip with thumb.	3		
FLEXION - bent thumb into hand.	3		
EXTENSION - moved thumb out to side of fingers.	3		
"Repeated exercises 5 times or according to care plan."	3		
FINGERS			
ABDUCTION - spread the fingers and thumb apart.	3		
ADDUCTION - brought fingers and thumb together.	3		
FLEXION - made fist.	3		
EXTENSION - straightened fingers so fingers, hand, arm	3		
"Repeated exercises 5 times or according to care plan."	3		
Covered arm with blanket. Uncovered leg.	3		
POST-PROCEDURE			
Provided comfort as noted on inside of front textbook	3		
Removed bath blanket.	3		
Placed call light within reach.	3		
Lowered bed to safe/comfortable level according to	3		
Raised/lowered bed rail according to care plan.	3		
Folded and returned bath blanket to proper place.	3		
Unscreened the person.	3		
Completed safety check of room as per front textbook	3		
Practiced hand hygiene.	3		
Reported and recorded your observations.	3		
TOTALS	195		

NOTES:

Judge Initials _____ Contestant Number _____

SkillsUSA Championships
2015

Job Interview and Resume

Points earned _____/out of 60 = _____%

RESUME			
1. Uses good quality paper	5		
2. Types all information neatly and accurately	5		
3. Follows consistent format/spacing throughout	5		
4. Includes all of the following information:			
a. Personal identification: name, address, telephone	5		
b. Employment objective	5		
c. Educational background: name and address of school, special courses, or training	5		
d. Work or employment experience: name/address of employers, dates employed, job title, description of duties, in order from most recent backward	5		
e. Skills and specific knowledge	5		
f. Other activities; organizations, offices held, awards, volunteer work, hobbies, interests	5		
g. References: full name, title, and address or states "References will be furnished on request"	5		
5. Spells all words correctly	5		
6. Punctuates all information correctly	5		
Total	60		

JUDGE COMMENTS:

SkillsUSA
2015 Contest Projects

Photography

Click the “Print this Section” button above to automatically print the specifications for this contest. Make sure your printer is turned on before pressing the button.

Field Assignment – Contact Sheet – Conceptual Overview

Time to completion: _____ **Theme:** _____

1. Capture photos in **BOTH** RAW and JPEG modes.
2. Scoring based on: Location limits, Theme, Time limit and Technical & artistic proficiency.
3. Cameras **MUST** be set to Manual exposure. **NO** version of Auto exposure is acceptable.
4. Auto focus is acceptable.
5. All memory cards must be formatted. The "No Image" message must be shown to a judge.
6. NO communicating with other students or advisors while on shoot.

FIELD ASSIGNMENT FOLDER

1. Start by placing FOUR of your best **UNEDITED** RAW photos into a folder named "**Field-Assignment-(your #)**" (i.e. *Field-Assignment-101*).
2. Do **NOT** rename the photos. Keep the name created by the camera.
3. ***IF*** your computer can **NOT** open the RAW file, you may view the JPEG photos, but still place the matching RAWS in your folder.
4. Use the **SAME** RAW or JPEG photos to make edits using your choice of editor.
   a) Do **NOT** over-manipulate the photos. Simply clean up the original photos as if you were showing your photos to your client.
   b) Global edits = exposure, color, vibrance, sharpness, etc...
   c) Cleaning up = Examples: **Remove:** power lines, trash, pimples, wrinkles. etc...
5. Save your final edited photos into the same folder using the following steps:
   a) Keep the original file name created by the camera (SAME AS THE RAW FILE).
   b) Add "-edit" after the original file name (i.e. IMG_2063-***edit***.jpg)
   c) Save as a flattened JPEG.
6. Create a 2x2 Contact Sheet using the 4 chosen edited JPEG images (any method acceptable).
7. Document should be 8.5 x 11 @ 300ppi.
8. Place your contestant number in the top center margin. Save contact sheet as **"Contact-Sheet-(your #).pdf"** (i.e. *Contact-Sheet-101)*
9. Your Field Assignment Folder should now contain 8 photos and 1 pdf: the **4** original RAWS PLUS **4** matching edited Jpegs, PLUS **1** contact sheet
10. Bring your jump drive with the Field Assignment folder to the downloading station.
11. IMPORTANT – Your Field Assignment folder, photos, and contact sheet **MUST** be named **EXACTLY** as instructed above or points will be deducted. Be sure it contains the original unedited RAWs, edited JPEGs, AND Contact Sheet !!!

Conceptual Design (DONE ON THURSDAY)
Let your imagination run wild as you create a conceptual piece (composite) combining the images from your Field Assignment. Very few parameters are given and judging is based on Creativeness, Unity of Images, use of standard rules of art & design, mastery of Photoshop skills, and ability to follow these directions:

1. Create a new file named "**Conceptual-your#**" (i.e. *Conceptual-105*).
2. You **MUST** use a minimum of 3 images from your chosen Field Assignment images.
3. The Conceptual piece **MUST** be a flattened Jpeg 8x10 @ 300ppi.
4. Using the Text Tool, place your contestant number in the top header, center justified, using Arial Font at size 30 px. (i.e. **"105"**)
5. Save to a jump drive and bring to the designated download station.

This document contains proprietary information. Unauthorized duplication is illegal without the prior written consent of the author. For more information, please contact:

Bill Chenaille
SkillsUSA National Tech Chair, Photography
VP of Marketing
Academy For Media Production
238 Main St. - McSherrystown, PA 17344
800-661-2981
bjc@amp-school.com
www.amp-school.com

PHOTO CHALLENGE

This year's challenge is "Depth of Field". In this segment, you will focus on the subject outlined by the contest judge and choose the best camera settings to create the shallowest depth of field possible.

1. You can NOT move the items on the table.
2. Set the camera's Quality to "Jpeg".
3. Set the camera's Exposure to Manual.
4. Use any method you can to ensure proper exposure.
5. Create a Custom White Balance taking readings off the white table top.
5. YOU HAVE 3 CLICKS OF THE CAMERA ONLY !!! (not including White Balance Shot)
6. Images are scored using the following parameters:
    a. Camera Settings (Jpeg, Manual)
    b. White Balance accuracy
    c. Exposure of the image
    d. Quality of Depth-of-Field
    e. Overall Quality (composition & cropping)

PORTRAIT STUDIO

You are to take a head & shoulder portrait of your subject as if it were to be used in a high school yearbook. Use the following guidelines:

1. Create a _____ Lighting Pattern on the subject's face.
2. Using ISO _____, set the Main / Key light to an **fstop** of _____.
   (**NOTE**: Use a light meter to achieve more accurate settings)
3. Set the Fill light _____ **fstops** from the Main Light.
4. Set the camera's ISO, shutter speed, and aperture to their appropriate settings.
5. When done, take your camera directly to the download station.
6. Images are scored using the following parameters:
   a. Placement & setting of the Main Light
   b. Placement & setting of the Fill Light
   c. Camera Settings
   d. Quality of subject's pose & expression

PORTRAIT STUDIO

You are to take a head & shoulder portrait of your subject as if it were to be used in a high school yearbook. Use the following guidelines:

1. Create a _____ Lighting Pattern on the subject's face.
2. Using ISO _____, set the Main / Key light to an **fstop** of _____.
   (**NOTE**: Use a light meter to achieve more accurate settings)
3. Set the Fill light _____ **fstops** from the Main Light.
4. Set the camera's ISO, shutter speed, and aperture to their appropriate settings.
5. When done, take your camera directly to the download station.
6. Images are scored using the following parameters:
   a. Placement & setting of the Main Light
   b. Placement & setting of the Fill Light
   c. Camera Settings
   d. Quality of subject's pose & expression

PORTRAIT STUDIO

Contestant Number												
Placement of Main/Key Light (0-1-2 points)												
Placement of Fill Light (0-1-2 point)												
Setting of Main/Key Light (0-1-2 points)												
Setting of Fill Light (0-1-2 points)												
Camera Settings (0-1-2 points)												
Overall Quality (10 points)												
TOTALS												

Contestant #_____

DIGITAL TROUBLESHOOTING

(MATCH THE APPROPRIATE LETTER IN THE FOLLOWING SPACES)

_____ 1. Camera Shake

_____ 2. Barrel Distortion

_____ 3. Color Fringing

_____ 4. Aliasing

_____ 5. White balance - incorrect setting

_____ 6. Noise

_____ 7. Halos

_____ 8. Improper Gamma

_____ 9. Over Sharpening

_____ 10. Flash Sync - too fast

_____ 11. Posterization

_____ 12. Over Saturation

_____ 13. JPEG Artifacts

_____ 14. Perspective Shift (aka. Keystone)

_____ 15. HDR (over done)

_____ 16. Parallax

_____ 17. Dirty Sensor

_____ 18. Clogged Printer Nozzle

_____ 19. Lens Vignetting

_____ 20. Nothing Technically Wrong

_____ **TOTAL SCORE**

FIELD ASSIGNMENT

Contestant #	TOTAL: (0 - 15)
101	
102	
103	
104	
105	
106	
107	
108	
109	
110	
111	
112	
113	
114	
115	
116	
117	
118	
119	
120	
121	
122	
123	
124	
125	
126	
127	
128	
129	
130	
131	
132	
133	
134	
135	
136	
137	
138	

Contestant #	TOTAL: (0 - 15)
501	
502	
503	
504	
505	
506	
507	
508	
509	
510	
511	
512	
513	

Judges Name: _____

CONCEPTUAL DESIGN

Must use a minimum of 3 images from Field Assignment contact sheet only

Exceptional = 100 Superior = 90 Excellent = 80 Above Average =70 Average = 60 Below Average = 50

Contestant #	Score
101	
102	
103	
104	
105	
106	
107	
108	
109	
110	
111	
112	
113	
114	
115	
116	
117	
118	
119	
120	
121	
122	
123	
124	
125	
126	
127	

Contestant #	Score
128	
129	
130	
131	
132	
133	
134	
135	
136	
137	
138	
501	
502	
503	
504	
505	
506	
507	
508	
509	
510	
511	

SkillsUSA
2015 Contest Projects

Plumbing

Click the “Print this Section” button above to automatically print the specifications for this contest. Make sure your printer is turned on before pressing the button.

SkillsUSA Championships – Plumbing Competition
2015 Contestant Booklet

TABLE OF CONTENTS

Page	Contents
1	Table of Contents
2	Welcome Letter – Roger Peugeot
3	Sponsor List
4	Committee Roster
5	Instruction Sheet – DWV
6	Graphic – Waste & Vent – Isometric
7	Instruction Sheet – Water Supply Plumbing System
8	Graphic – Domestic Water – Isometric
9	Graphic – Floor Plan/Fixture Plan
11	Graphic – Closet Rough-in
12	Graphic – Lavatory Rough-in
13	Graphic – Utility Tray Rough-in
14	Contest Material Requirements

June 24, 2015

Dear Residential Plumbing Contestant:

The Plumbing-Heating-Cooling Contractors – National Association Educational Foundation welcomes the opportunity to participate in the *SkillsUSA Championships Plumbing Competition*. It is our pleasure to represent the plumbing industry in this exciting event.

The PHCC Educational Foundation is dedicated to improving the industry by helping students in the plumbing, heating and cooling fields reach their full potential. The *SkillsUSA Championships* are an outstanding example of the professionalism that results when industry is joined with education.

You have selected an honorable and rewarding profession as a career. The PHCC Educational Foundation extends to you its congratulations and sincere best wishes for a successful competition.

Sincerely,

Roger Peugeot
Chairman
PHCC Educational Foundation

The PHCC Educational Foundation Educational Foundation and SkillsUSA gratefully acknowledge the following companies for their generous donations of funds, materials, awards and/or prizes in support of the
2015 SkillsUSA Championships – Plumbing Competition

HEADLINE SPONSORS

MATERIAL AND PRIZE SPONSORS

A.O. Smith Water Products Co.
BrassCraft Manufacturing
Caddy
Cast Iron Soil Pipe Institute
Charlotte Pipe & Foundry
Copper Development Assn.
Delta Faucet Company
DEWALT Tools & Accessories
Harris Products Group
Irwin Industrial Tools
Kentucky Assn. of Master Contractors
KOHLER
Matheson Gas
MILWAUKEE TOOL
Mission Rubber Co.
Oatey
PHCC – National Association
PHCC Educational Foundation
Ridge Tool Company
Rothenberger USA
Senninger Plumbing Co., Inc.
Sioux Chief Manufacturing Co.
Tyler Pipe & Coupling
UA Local #502
Viega, LLC
Zoeller Pump Company

2015 SkillsUSA Championships
Residential Plumbing Technical Committee

Robert Hahn, Co-Chair
Eastwick College, HoHoKus School of Trade

Merry Beth Hall, Co-Chair
PHCC Educational Foundation

Robyn Bucknam
Stanley, Black & Decker, Inc.

Philip Campbell
United Association

J. Daniel Crigler, III
L & D Associates, Inc.

Laurie C. Crigler
L & D Associates, Inc.

Victor Hatcher
Tyler Pipe & Coupling

Tim House
Kentucky Association of Master Contractors

Bill Jones
Raven Mechanical, LP

Mike Kirby
MILWAUKEE TOOL

Harold Moret
Copper Development Association

Dennis Peters
DKP Plumbing Co.

Dale Powell
Copper Development Association

Tony Senninger
Senninger Plumbing Co., Inc.

Jim Steinle
Atomic Plumbing & Drain Cleaning

James Walls
Cast Iron Soil Pipe Institute

Instruction Sheet
DWV Plumbing System

Following are the instructions for the installation of the DWV plumbing system in the SkillsUSA Championships – Plumbing Competition. Refer also to the floor plan, rough-in sheets, and isometric drawings.

1. Drain and vent lines must be installed at no less than 1/8” or more than 1/4” per foot fall.
2. All rough-in measurements shall be within 1/8” plus or minus.
3. All vertical vent lines shall be installed plumb and all horizontal vent lines shall be installed graded and be of PVC.
4. Cast iron piping (soil, waste and vent) shall be supported and anchored from the bottom of the platform using clevis hangers and all-thread rod. Use riser clamps on the cast iron risers above the platform.
5. The 3” vent stack shall terminate above the top of the wall to a point 8-1/4” to the center of the vent fitting where revents connect.
6. The top of the plywood platform shall be considered the finished floor for all fixture rough-ins.
7. The transition from cast iron to PVC will be made with transition couplings at 7” above the finished floor.
8. The water closet, lavatory, utility tray and floor drain shall conform to the floor plan and rough-in sheets to within 1/8”.
9. Fixture location shall conform to the floor plan.
10. The water closet flange shall be secured to the floor with the appropriate screws.
11. The lavatory wall bracket shall be attached with wood screws so that the lavatory will be at the location and height specified on the rough-in sheet.
12. The trap arm for the utility tray will terminate at a height of 14½” above the finished floor and will be centered on the short wall.
13. The floor drain shall be located 15” from the end of the table with the rim to sit on the finished floor.
14. The judges may require the system to be tested and their decision is final.
15. **THINK SAFETY AT ALL TIMES THROUGHOUT THE CONTEST!**

Instruction Sheet
Water Supply Plumbing System

Following are the instructions for the installation of the domestic hot and cold water supply piping system for the SkillsUSA Championships – Plumbing Competition. Refer also to the floor plan, rough-in sheets, and isometric drawings.

1. The hot and cold water supply system shall be installed in accordance with the isometric drawing. The cold water line shall be on the bottom and extend 6” from the center of the 90° elbow to the end of the platform.
2. Run the water lines through the holes in the wall of the platform.
3. Both the hot and cold lines will be tied together with one tee and one 90° elbow each as shown on isometric.
4. A ¾”c x mip adapter will be installed on the hot water line that extends beyond the platform wall. This will be used for testing the system.
5. All rough-in dimensions shall be within 1/8” plus or minus.
6. The utility tray shall be located centered on the short front wall as per drawing.
7. The lavatory, water closet and utility tray supply lines shall be installed according to the floor plan and rough-in sheets.
8. All water piping must be true to the workstation with piping level and plumb.
9. Branch supplies shall extend beyond the wall of the platform with sufficient length to receive the fixture trim. The supply lines are to be connected to the lavatory faucet.
10. Piping must be neat and securely fastened using accepted industry standards for workmanship.
11. Completed projects will be tested. Provisions for testing are to be made at the ¾”c x mip tee, which is to be considered the water main.

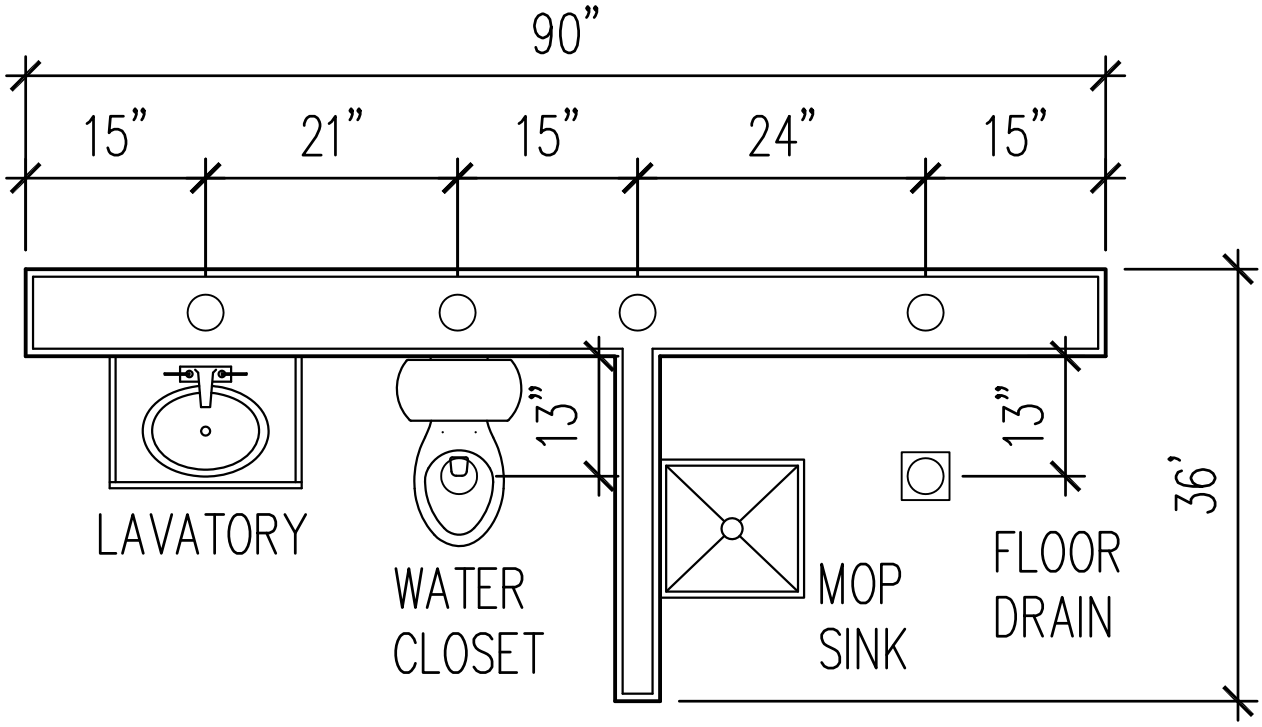

NOTE:
FLOOR PLAN AND
FIXTURE PLAN DRAWING
IS NOT TO SCALE.

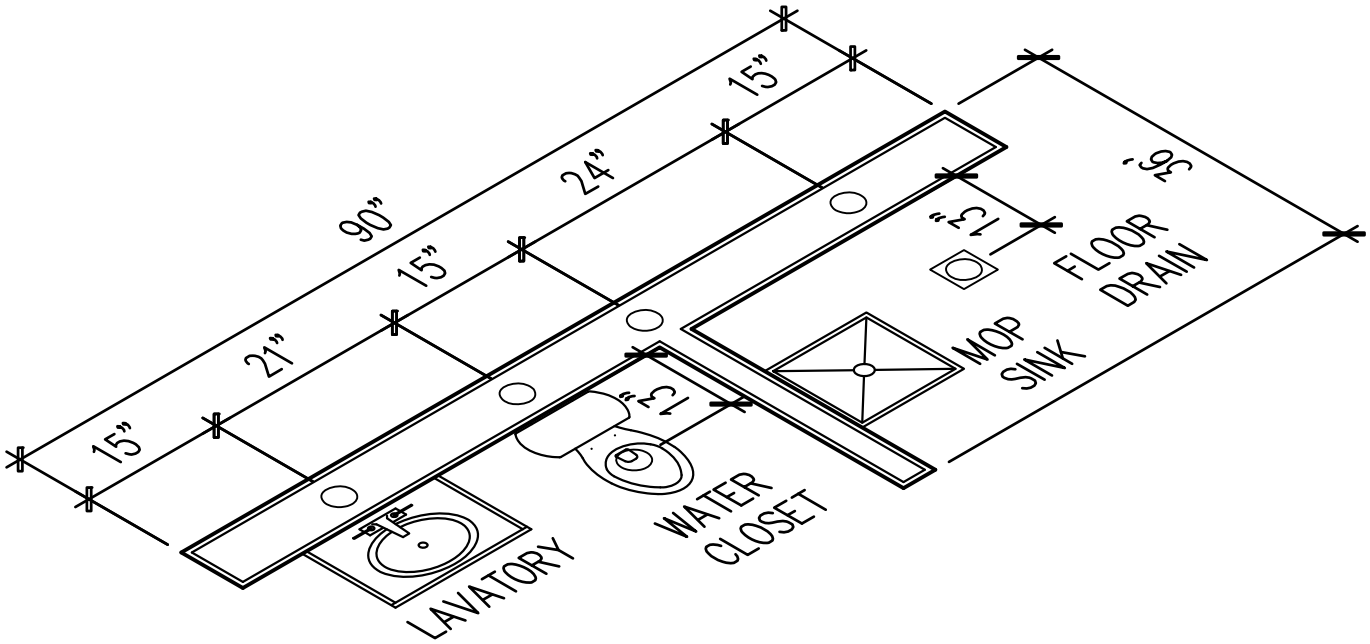

NOTE:
FLOOR PLAN AND
FIXTURE PLAN DRAWING
IS NOT TO SCALE.

NOTE:
ON ALL RISER DIAGRAMS DENOTE FLOOR PENETRATIONS (TYPICAL).

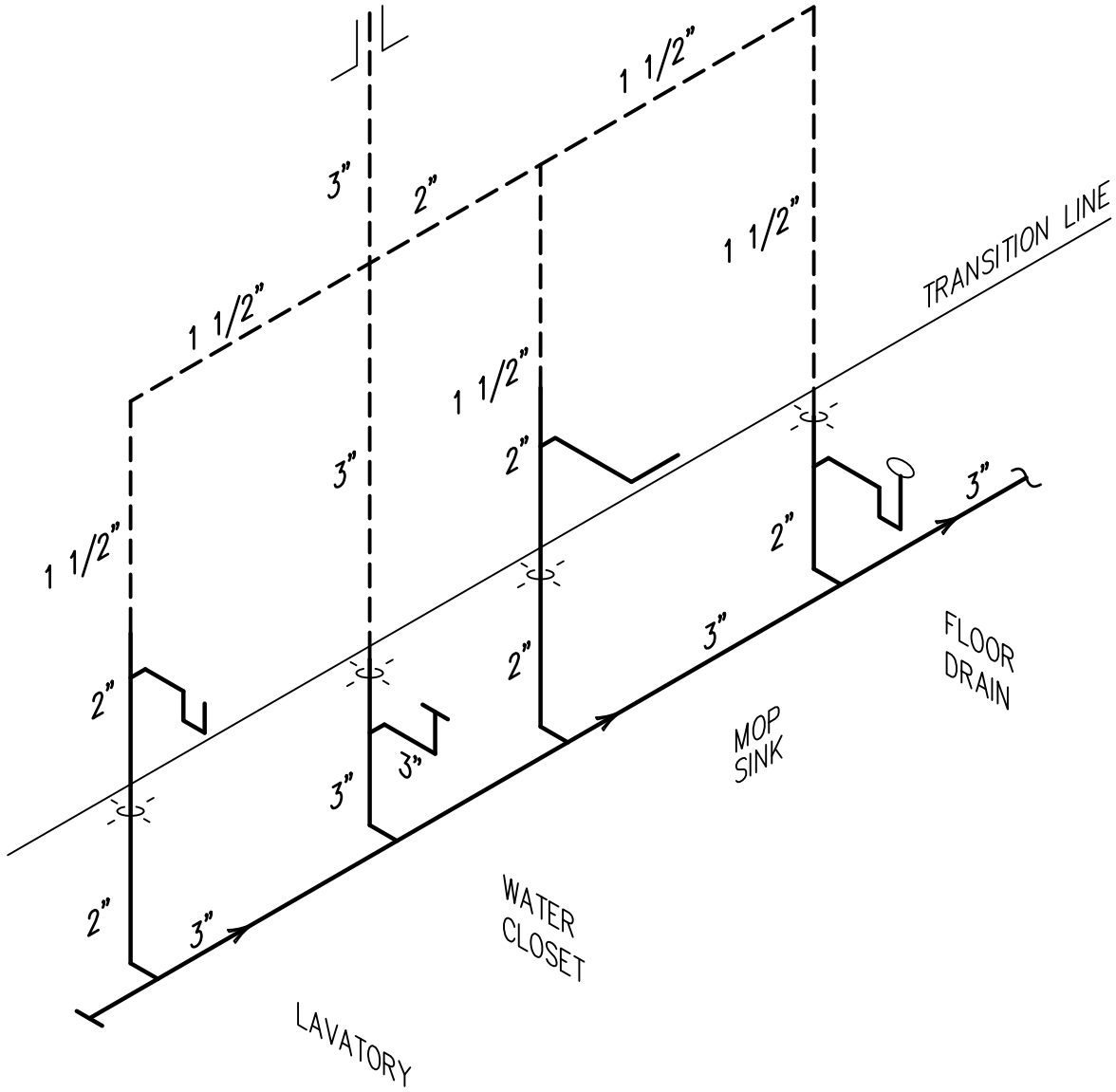

NOTE:
WASTE AND VENT RISER DRAWING NOT TO SCALE.

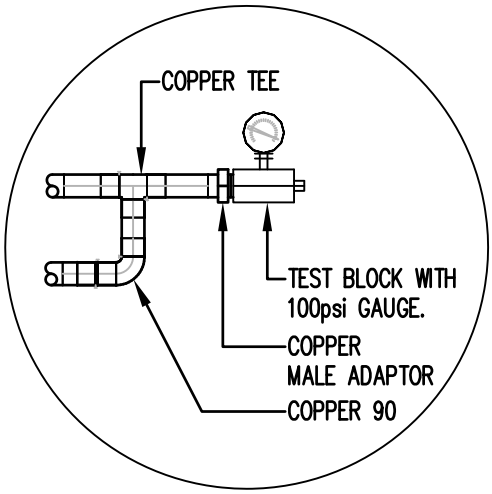

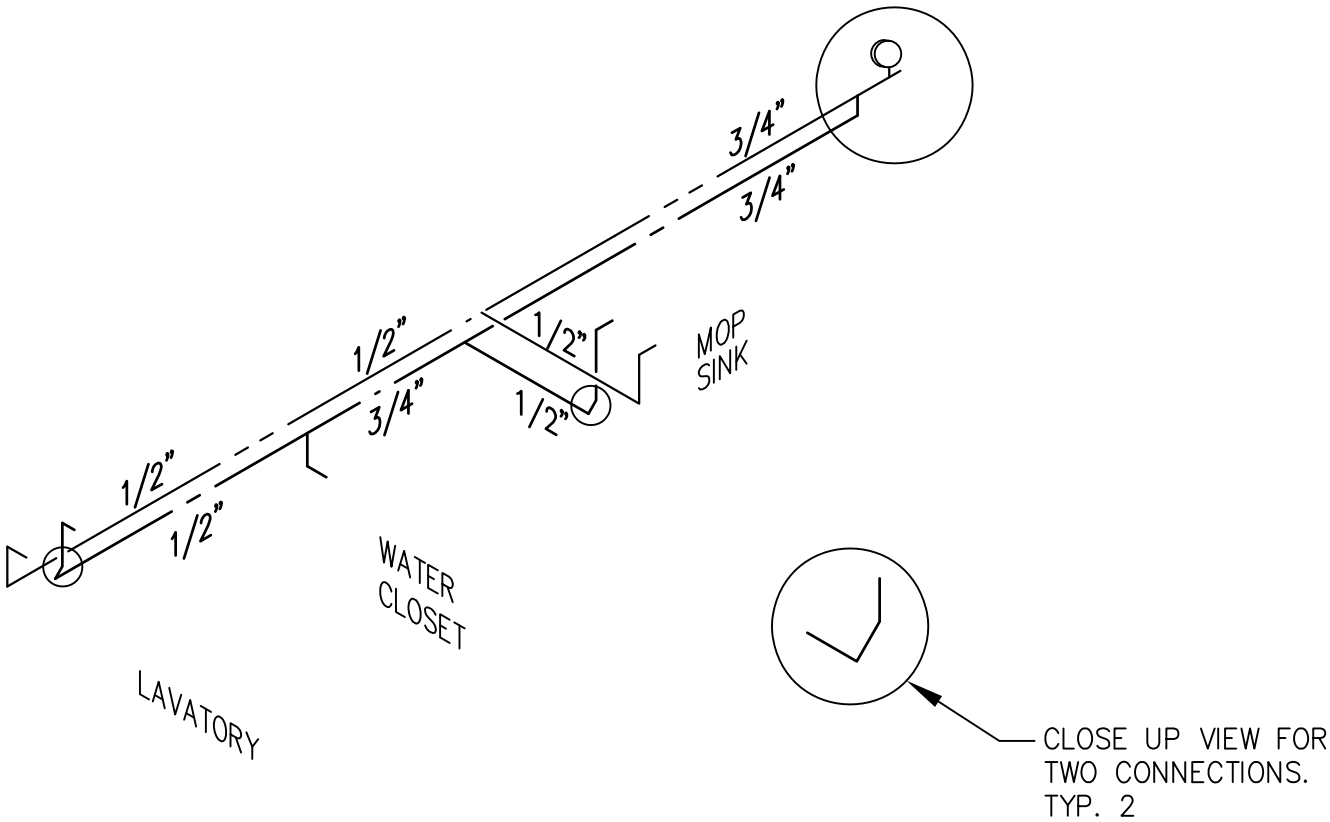

NOTE:

DOMESTIC COLD AND HOT WATER LINES DRAWING IS NOT TO SCALE.

SkillsUSA Plumbing Contest

Lavatory Rough-In Sheet

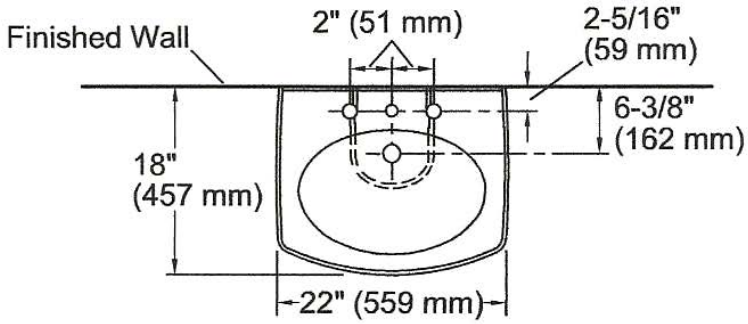

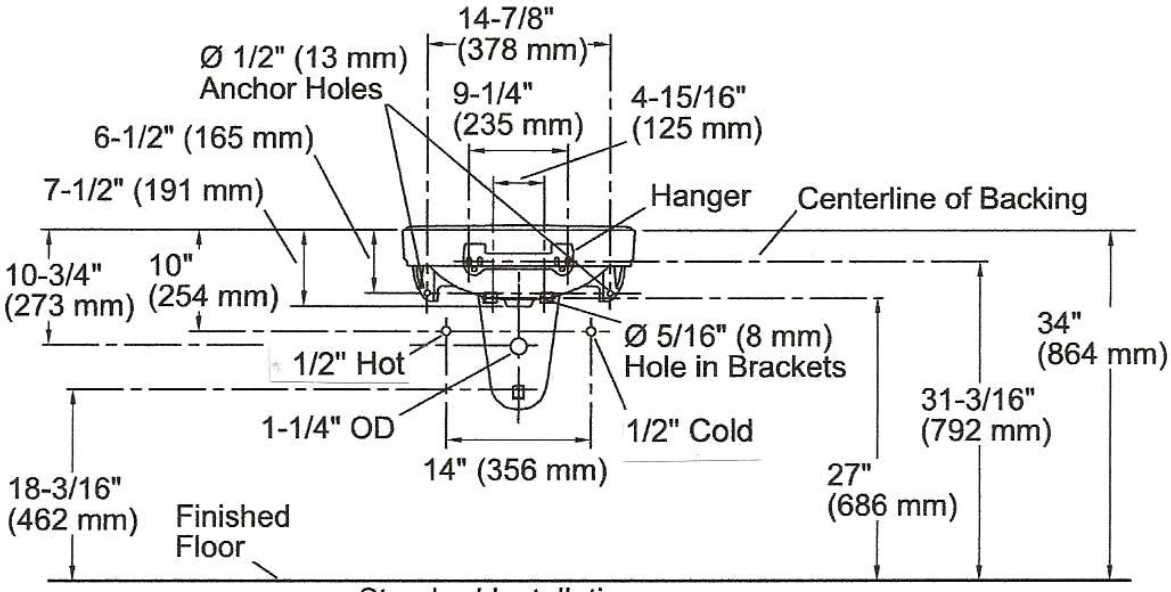

Standard Installation

Technical Information

All product dimensions are nominal.

Bowl configuration:	Single
Installation:	Wall-mount
Bowl area (Only)	Length: 18" (457 mm) Width: 12" (305 mm) Water depth: 4" (102 mm)
Number of deck holes:	3
Faucet hole(s):	1-1/4" (32 mm)
Drain hole:	1-3/4" (44 mm)

THE BOLD LOOK OF KOHLER®

UTILITY TRAY
ROUGH-IN

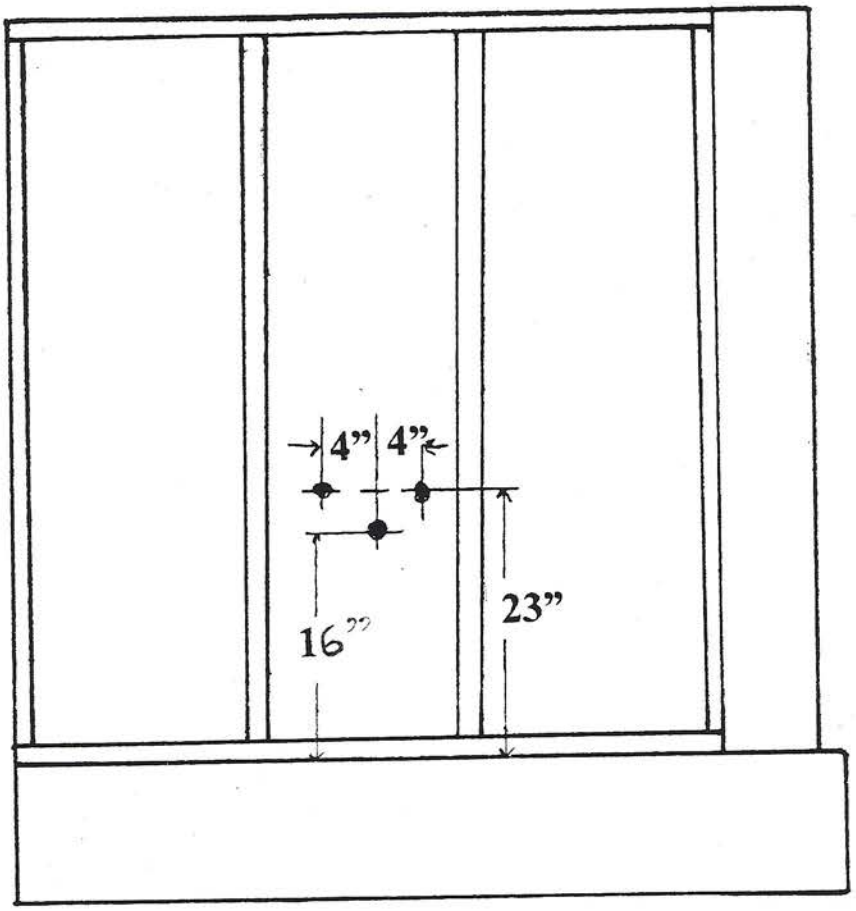

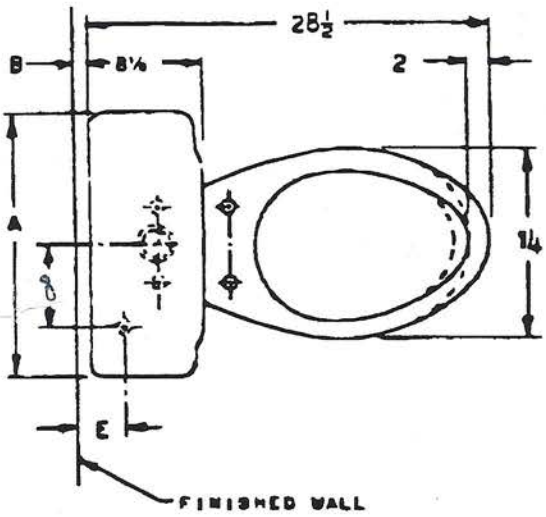

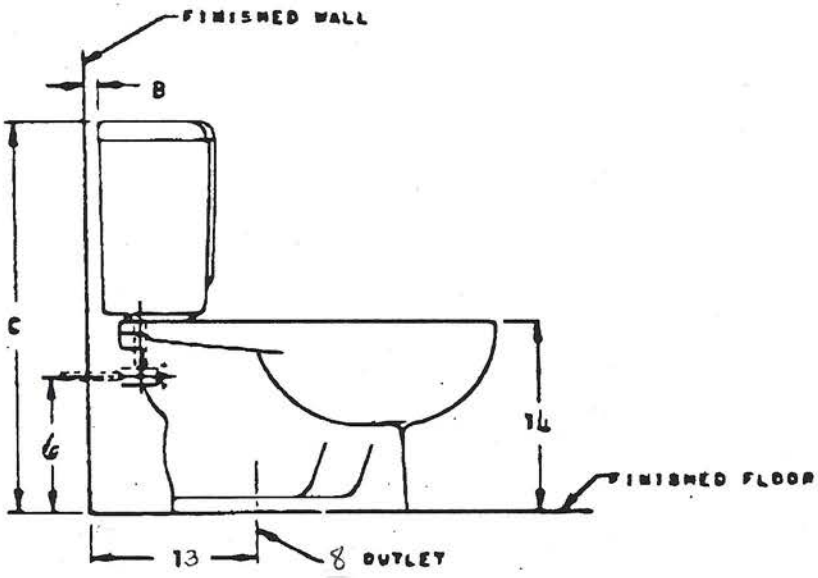

CLOSET ROUGH-IN

SkillsUSA
2015 Contest Projects

Power Equipment Technology

Click the “Print this Section” button above to automatically print the specifications for this contest. Make sure your printer is turned on before pressing the button.

SkillsUSA
Champions at Work®

Contestant Number
_____

2014
Power Equipment Technology
Contestant Sign-Off Sheet

Station #1 _____ Station #2 _____ Station #3 _____

Station #4 _____ Station #5 _____ Station #6 _____

Station #7 _____ Station #8 _____ Station #9 _____

Station #10 ____ Station #11_____ Station # 12 ____

Resume Y _____ N _____

6/16/14

Contestant #
_____

SkillsUSA
Champions at Work®

Score
_____

2014
Briggs & Stratton
Station # 2 – Parts Identification

SCENARIO – Ferris IS3100

This section of the competition tests your ability to:

- Identify parts
- Locate replacement parts

Engine Info Provided: Model #5900559-IS3100Z

Please locate the Evaporative Canister on the table.

What is the reference number for this component? _____**2**_____ (3pts)

What is the part number for a replacement part? ___**313036**_____ (4pts)

Contestant #
_____

SkillsUSA
Champions at Work®

Score
_____

2014
Briggs & Stratton
Station # 2 – Parts Identification

SCENARIO – Ferris IS3100

This section of the competition tests your ability to:

- Identify parts
- Locate replacement parts

Engine Info Provided: Model #5900559-IS3100Z

Please locate the Evaporative Canister on the table.

What is the reference number for this component? _____ (3pts)

What is the part number for a replacement part? _____ (4pts)

Contestant #
_____

Score
_____

2014
Briggs & Stratton
Station # 2 – Parts Identification

SCENARIO – Model 12

This section of the competition tests your ability to:

- Identify parts
- Locate replacement parts
- Obtain Pricing

Engine Info Provided: Model #122037-0550-B8

Please locate the Governor gear on the table.

What is the reference number for this component? _____ (3pts)

What is the part number for a replacement part? _____ (3pts)

What is the price for this component?_____(3Pts)

Contestant #
_____

SkillsUSA
Champions at Work®

Score
_____

2014
Briggs & Stratton
Station # 2 – Parts Identification

SCENARIO – Model 38

This section of the competition tests your ability to:

- Identify parts
- Locate replacement parts
- Obtain Pricing

Engine Info Provided: Model #386447-3020-G1

Please locate the Rectifier/Regulator on the table.

What is the reference number for this component? _____**2**_____ (3pts)

What is the part number for a replacement part? ___**841170**_____ (3pts)

What is the price for this component?_____**$137.20**_____(3Pts)

Contestant #
_____

Score
_____

2014
Briggs & Stratton
Station # 2 – Parts Identification

SCENARIO – Model 38

This section of the competition tests your ability to:

- Identify parts
- Locate replacement parts
- Obtain Pricing

Engine Info Provided: Model #386447-3020-G1

Please locate the Rectifier/Regulator on the table.

What is the reference number for this component? _____ (3pts)

What is the part number for a replacement part? _____ (3pts)

What is the price for this component? _____(3Pts)

Contestant #
_____

Score
_____

2014
Briggs & Stratton
Station # 2 – Parts Identification

SCENARIO – Model 12

This section of the competition tests your ability to:

- Identify parts
- Locate replacement parts
- Obtain Pricing

Engine Info Provided: Model #122037-0550-B8

Please locate the Governor gear on the table.

What is the reference number for this component? ____**219**_____ (3pts)

What is the part number for a replacement part? _____**693578**___ (3pts)

What is the price for this component?_____**$9.05**_____(3Pts)

Power Equipment Technology
Station #2
Parts Identification (Peerless)
Instructions
(25 points)

This phase of the competition will test your ability to identify parts and describe their function on the transmission.

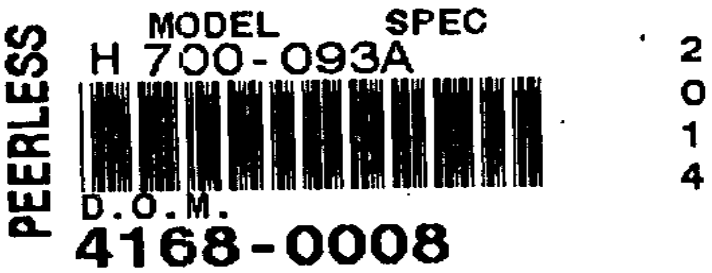

1. Use the transmission identification decal above for reference when looking up the parts. List the transmission model and spec number on the score sheet.

2. You will need to locate the reference numbers on the illustrated parts list for each part.

3. Determine the service part numbers using the parts list for each part.

4. Give a brief description illustrating your knowledge of the function of the individual part identified.

Each contestant must enter the required information on the **Score Sheet**.

Do not write on this page.

Power Equipment Technology
Station # 2
Parts Identification (Kohler)
Judges Answer Sheet
(25 points)

Model and Spec No.: 700-093A **(2 points)**

1.a. Part Name: Shift Key **(1 points)**

b. Reference No.: 8 **(1 points)**

c. Part No.: 792089B **(1 points)**

d. Function of Part: **(3 points)**
(Only a brief description is needed)

The shift keys engage the different spur gears to allow the transmission to select the correct gear and drive the shifter/brake (output) shaft. The gears can be multiple forward speeds or a reverse.

2.a. Part Name: Spur Gear **(2 points)**

b. Reference No.: 53 **(2 points)**

c. Part No.: 778121A **(2 points)**

d. Function of Part: **(3 points)**
(Only a brief description is needed)

The spur gears is one of the gears that the shift keys engage. The shift keys now lock the spur gear and the shifter shaft together to allow the shifter shaft to rotate and do work outside
of the transmission.

e. How did you identify that this is the correct part? **(2 points)**

I counted the number of teeth and determined there was the gaps for the shifter keys to engage. The other spur gear has splined teeth internally.

3.a. Part Name: Brake Disc **(1 points)**

b. Reference No.: 36 **(1 points)**

c. Part No.: 790003 **(1 points)**

d. Function of Part: **(3 points)**
(Only a brief description is needed)

The brake disc is attached to the shifter/brake (output) shaft. When the brake is activated the

brake pads squeeze the disc. This slows down and stops the shifter/brake (output) shaft bringing the unit to a stop. The unit could be a mower or anything that the output shaft is connected to.

Contestant #
_____

SkillsUSA
Champions at Work®

Score
_____

Power Equipment Technology
Station # 2
Parts Identification (Peerless)
Answer Sheet
(25 points)

Model and Spec No.: _____ **(2 points)**

1.a. Part Name: _____ **(1 points)**

b. Reference No.: _____ **(1 points)**

c. Part No.: _____ **(1 points)**

d. Function of Part: **(3 points)**
(Only a brief description is needed)

_____

_____

_____

2.a. Part Name: _____ **(2 points)**

b. Reference No.: _____ **(2 points)**

c. Part No.: _____ **(2 points)**

d. Function of Part: **(3 points)**
(Only a brief description is needed)

_____

_____

_____

2 e. How did you identify that this is the correct part? **(2 points)**

_____

_____

_____

3.a. Part Name: _____ **(1 points)**

b. Reference No.: _____ **(1 points)**

c. Part No.: _____ **(1 points)**

d. Function of Part: **(3 points)**
(Only a brief description is needed)

_____

_____

_____

Power Equipment Technology
Station #2
Parts Identification (Kohler)
Instructions
(25 points)

This phase of the competition will test your ability to identify parts and describe their function on the engine.

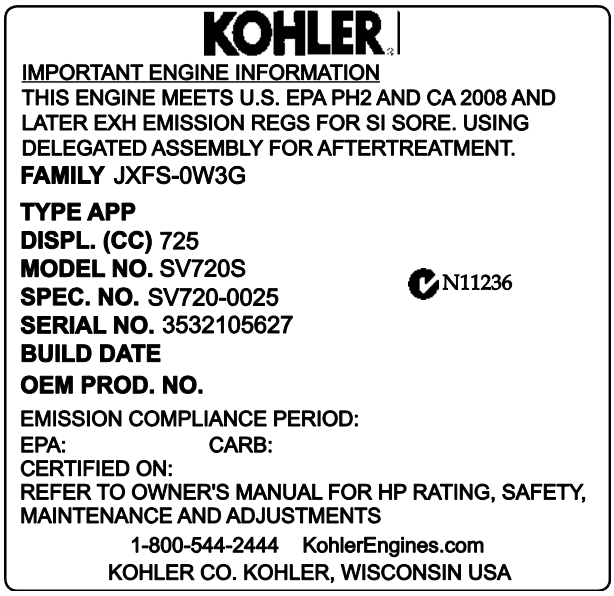
KOHLER

IMPORTANT ENGINE INFORMATION
THIS ENGINE MEETS U.S. EPA PH2 AND CA 2008 AND LATER EXH EMISSION REGS FOR SI SORE. USING DELEGATED ASSEMBLY FOR AFTERTREATMENT.
FAMILY JXFS-0W3G
TYPE APP
DISPL. (CC) 725
MODEL NO. SV720S
SPEC. NO. SV720-0025
SERIAL NO. 3532105627
BUILD DATE
OEM PROD. NO.
N11236
EMISSION COMPLIANCE PERIOD:
EPA: CARB:
CERTIFIED ON:
REFER TO OWNER'S MANUAL FOR HP RATING, SAFETY, MAINTENANCE AND ADJUSTMENTS
1-800-544-2444 KohlerEngines.com
KOHLER CO. KOHLER, WISCONSIN USA

1. Use the engine identification decal above for reference when looking up the parts. List the engine model and spec number on the score sheet.

2. You will need to locate the reference numbers on the illustrated parts list for each part.

3. Determine the service part numbers using the parts list for each part.

4. Give a brief description illustrating your knowledge of the function of the individual part identified.

Each contestant must enter the required information on the **Score Sheet**.

Do not write on this page.

Power Equipment Technology
Station # 2
Parts Identification (Kohler)
Judges Answer Sheet
(25 points)

1. Model and Spec No.: SV720-0025 **(1 points)**

2.a. Part Name: Oil Pump Assembly **(1 points)**

b. Reference No.: 3 **(1 points)**

c. Part No.: 32 393 08-S **(1 points)**

d. Function of Part: **(3 points)**
(Only a brief description is needed)

The oil pump is designed to take oil from the lowest portion of the engine and pump it through the filter into the crankpin area to lubricate the connecting rod bearing, and then up to the top main bearing surface.

3.a. Part Name: Kit, Governor Gear w/Pin **(1 points)**

b. Reference No.: 4 **(1 points)**

c. Part No.: 24 043 12-S **(1 points)**

d. Function of Part: **(3 points)**
(Only a brief description is needed)

The governor regulates engine speed to stay consistant as load is applied and removed.

4.a. Part Name: Kit, 15 Amp Stator **(1 points)**

b. Reference No.: 11 **(1 points)**

c. Part No.: 237878-S **(1 points)**

d. Function of Part: **(3 points)**
(Only a brief description is needed)

The stator creates AC voltage as the magnets under the flywheel pass over the windings. Each post of the stator has copper wire wound inverse of the adjesent post. The magnets in the flywheel are mounted with “like” poles together. This voltage is delivered to the Rectifier-Regulator.

5.a. Part Name: Rectifier-Regulator **(1 points)**

b. Reference No.: 10 **(1 points)**

c. Part No.: 41 403 09-S **(1 points)**

d. Function of Part: **(3 points)**
(Only a brief description is needed)

The Rectifier-Regulator changes the AC voltage from the stator to DC voltage then regulates the voltage to a range that the battery can accept for charging.

Score
_____

SkillsUSA Champions at Work®

Contestant Number
_____

2014
Power Equipment Technology
Station # 3 – Electrical Testing

Contestant Worksheet

(100 POINTS)

EACH QUESTION IS WORTH 10 POINTS

1. Construct the following circuit

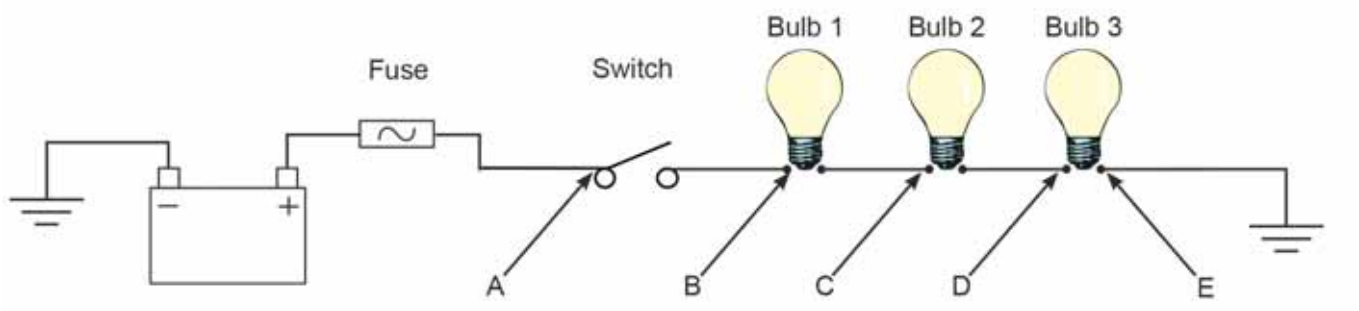

2. Close the switch to turn light bulbs ON.

3. Measure voltage at (leave black meter lead on ground for these tests ONLY):

A. _____ B. _____ C. _____ D._____ E. _____

4. What is the voltage drop across (red meter lead and black meter lead will alternate positions in this test):

A to B _____ B to C_____ C to D _____ D to E._____

5. Did you notice mV on the screen for any of the above tests and what voltage is mV less than? _____

Score
_____

SkillsUSA Champions at Work®

Contestant Number
_____

2014
Power Equipment Technology
Station # 3 – Electrical Testing

JUDGES SHEET

(100 POINTS)

EACH QUESTION IS WORTH 10 POINTS

1. Construct the following circuit

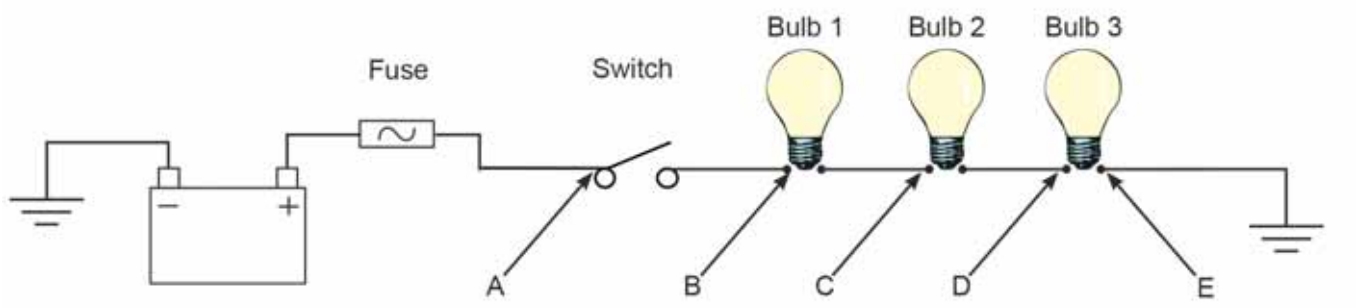

2. Close the switch to turn light bulbs ON.

3. Measure voltage at (leave black meter lead on ground for these tests ONLY):

Anywhere within these ranges is an acceptable answer.

A. 11.7-13.0V B. 11.7-13.0V C. 7.0- 8.5V D. 3.5-4.5V E. 0V or mV

4. What is the voltage drop across (red meter lead and black meter lead will alternate positions in this test):

A to B 0 or mV B to C 3.5 – 4.5V C to D 3.5-4.5V D to E. 3.5-4.5V

5. Did you notice mV on the screen for any of the above tests and what voltage is mV less than? 0V or Zero

2014
Power Equipment Technology
Station # 3 – Electrical Testing

(100 Points)

SCENARIO

This station will test your ability to use electrical testing tools (DVOM) and your understanding of wiring and testing a basic series circuit.

- Construct the series circuit as shown in the schematic below.

- Make sure to use the **FUSED** power supply on the board for power, clip a jumper wire to the spade terminal on the end of this wire

- The black plastic toggle switch is the switch referenced in the schematic to use for your circuit

- Utilize the **GROUND STRIP** in the upper left corner of the board to make your circuits complete.

Fused Power Supply location

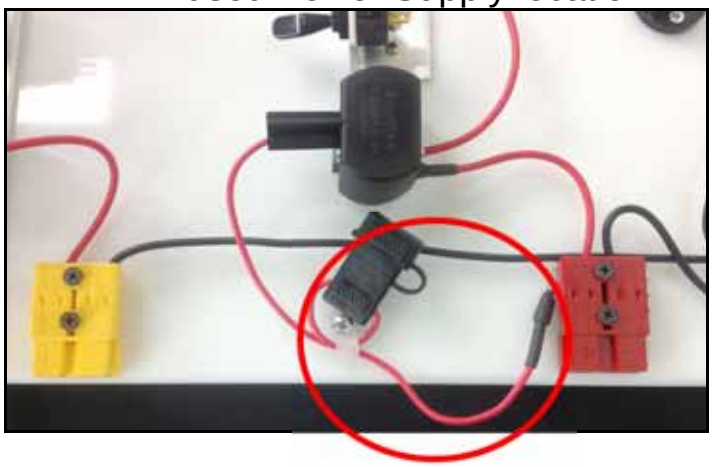

JUDGE

2014
Power Equipment Technology
Station # 4

Rewind Starter Repair

Score Sheet

Maximum Value: 75 points
Time Allowed: 30minutes

This section tests your ability to diagnose and repair a rewind starter. Your score is based on the correct repair of the starter and the use of the necessary parts.

Engine: Briggs & Stratton **120H02-0100-B1**

Judge: The brake spring is missing and both starter dogs are damaged. The contestant should order and install the bold items below. Subtract 5 points for each incorrect part number ordered.

1. Part Number: **281505S**_____ 10 points

2. Part Number: _**281505S**_____ 10 points

3. Part Number: _**691855**_____ 10 points

When repaired correctly, the white pawls should be held in position by the retainer plate. When the rope is pulled, they should feed smoothly from the hub of the starter and retract smoothly when the rope is allowed to return.

Points: **30** for correct parts used **45** for correct starter repair

Contestant #
_____

SkillsUSA
Champions at Work®

Score
_____

2014
Power Equipment Technology
Station # 4

Rewind Starter Repair

Score Sheet

Maximum Value: 75 points
Time Allowed: 30minutes

This section tests your ability to diagnose and repair a rewind starter. Your score is based on the correct repair of the starter and the use of the necessary parts. Points are removed for unnecessary parts ordered.

Engine: Briggs & Stratton **120H02-0100-B1**

A customer attempted repairs on this starter but was unsuccessful in getting it to operate properly. He claimed to have replaced several parts scavenged from another starter he had on hand.
List only the parts you need to repair the starter below, "order" them from the judge and repair the starter. Note that the starter spring is not damaged.

1. Part Number: _____

2. Part Number: _____

3. Part Number: _____

4. Part Number: _____

5. Part Number: _____

6. Part Number: _____

Points: **30** for correct parts used **45** for correct starter repair

JUDGE

SkillsUSA
Champions at Work®

2014
POWER EQUIPMENT TECHNOLOGY
Station # 5

Ignition

Maximum Value: ***95 points***
Time Allowed: ***30 minutes***

1. Match the components from a Briggs & Stratton Magnetron Ignition Armature on the attached page with their correct names.

10 pts each

1. Trigger Coil	**A**
2. High Tension Lead	**C**
3. Darlington Transistor	**F**
4. Lamination Stack	**B**
5. Primary Winding	**E**
6. Secondary Winding	**D**

2. What is the item on the table marked K used for? **14 pts**
   spark tester, ignition tester

3. Most Briggs & Stratton Ignition systems are: Please circle correct answer **11 pts**
   a. Hot tube systems
   b. Capacitive Discharge systems
   c. Magneto systems
   d. Plasma systems

10 pts

4. The air gap between the Ignition Armature and Flywheel Magnets controls the energy the ignition develops. The smaller the gap, the hotter the spark at the spark plug. The wider the gap, the weaker the spark at the spark plug. True or **False** Please circle correct answer

Contestant #
_____

SkillsUSA
Champions at Work®

Score
_____

2014
POWER EQUIPMENT TECHNOLOGY
Station # 5

Ignition

Maximum Value: 95 points
Time Allowed: 40 minutes

1. Match the components from a Briggs & Stratton Magnetron Ignition Armature on the attached page with their correct names.

10 pts each

1. Trigger Coil _____
2. High Tension Lead _____
3. Darlington Transistor _____
4. Lamination Stack _____
5. Primary Winding _____
6. Secondary Winding _____

2. What is the item on the table marked K used for? **14 pts**

_____

3. Most Briggs & Stratton Ignition systems are: Please circle correct answer **11 pts**
   a. Hot tube systems
   b. Capacitive Discharge systems
   c. Magneto systems
   d. Plasma systems

4. The air gap between the Ignition Armature and Flywheel Magnets controls the energy the ignition develops. The smaller the gap, the hotter the spark at the spark plug. The wider the gap, the weaker the spark at the spark plug. **True or False** Please circle correct answer

10 pts

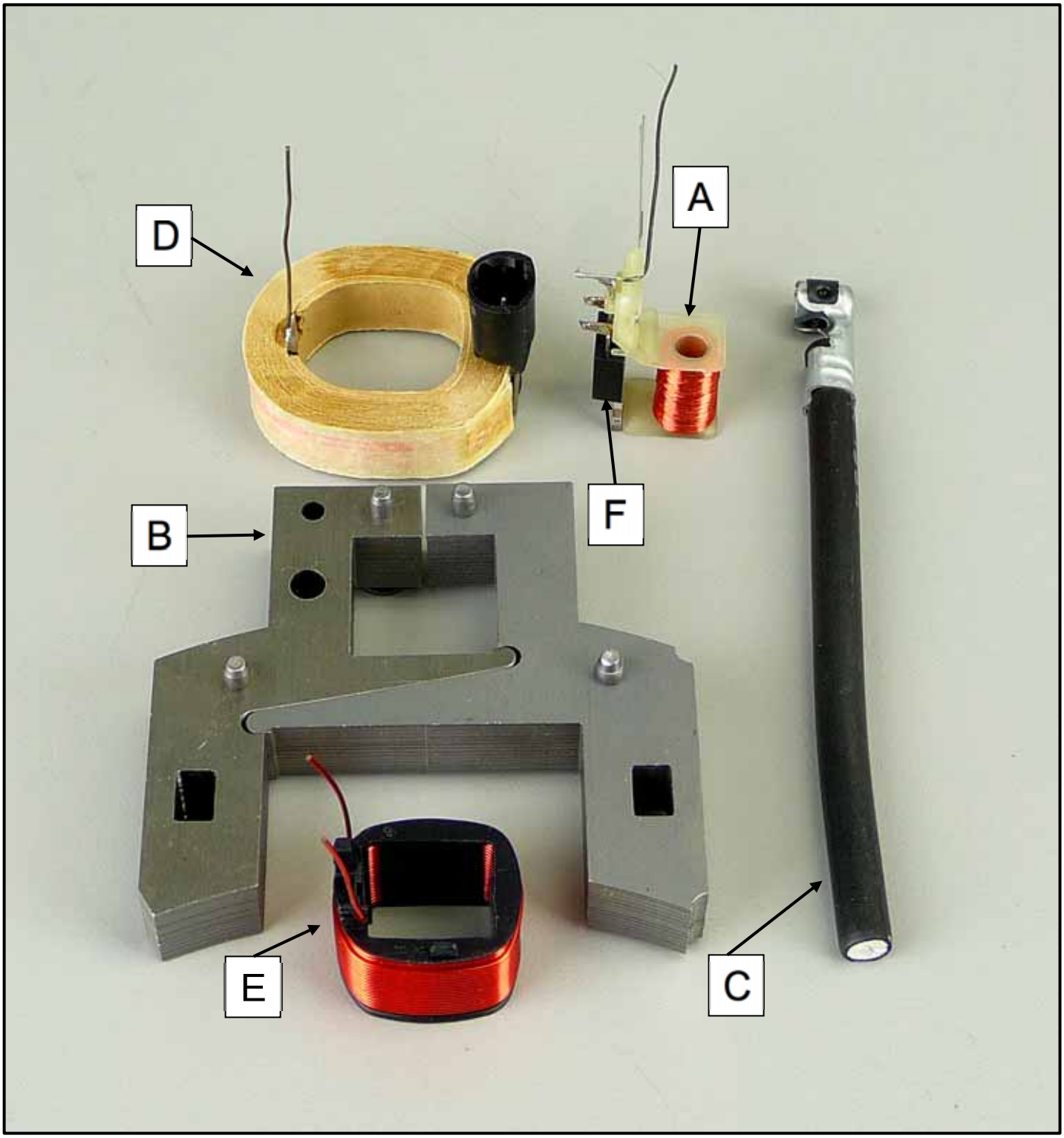
D
A
F
B
E
C

JUDGE

2014
Power Equipment Technology
Station # 6

Failure Analysis

Score Sheet

Maximum Value: 75 points
Time Allowed: 30minutes

This section tests your ability to correctly diagnose a failure of an engine or engine component. Your score is based on your responses to the questions below.

Engine: Briggs & Stratton **28Q777-6053-E2**

A customer reports that his lawn tractor would not start. He eventually traced the problem to a defective ignition switch. He purchased a replacement at an auto parts store. The engine still would not start so the equipment was brought to you for repair.

Your testing determines that the engine's ignition system is not functioning. The ignition armature was removed and now sits in front of you.

1. **B**
2. **D**
3. **D**
4. **B**
5. **D**

Each question is 15 points

Contestant #
_____

SkillsUSA
Champions at Work®

Score
_____

2014
Power Equipment Technology
Station # 6

Failure Analysis

Maximum Value: 75 points
Time Allowed: 40 minutes

This section tests your ability to correctly diagnose a failure of an engine or engine component. Your score is based on your responses to the questions below.

Engine: Briggs & Stratton **28Q777-6053-E2**

A customer reports that his lawn tractor would not start. He eventually traced the problem to a defective ignition switch. He purchased a replacement at an auto parts store. The engine still would not start so the equipment was brought to you for repair.

Your testing determines that the engine's ignition system is not functioning. The ignition armature was removed and now sits in front of you.

Circle the letter of the correct answer.

1) What physical damage is evident on the armature body?
   a. Abrasion
   b. Blistering
   c. Wear
   d. None

2) What will cause this type of damage?
   a. Engine overheating
   b. Defective armature
   c. There is no damage
   d. None of the above

3) What is the correct repair procedure for this condition?
   a. Reassemble and tighten loose wires
   b. Replace the battery in the ignition armature
   c. Recharge the ignition armature battery
   d. Replace the ignition armature

4) What evidence from the customers' story provides you with the best information as to what may be wrong with the equipment?
   a. The customer is an untrained technician and should not have been working on this equipment
   b. The customer purchased the ignition switch from an auto parts store and replaced it
   c. The customer brought it to you in the first place
   d. The information provided by the customer did not help in the diagnosis of the problem at all

5) How would you determine if the starting problem is a faulty ignition armature or an issue with the safety interlock system?
   a. Replace the armature and see if that fixes the problem
   b. Replace the wiring harness and see if that fixes the problem
   c. Ask the customer for more detailed information
   d. Isolate the armature from the equipment and test for spark

Each question is 15 points

Adjust Valve Clearance (Lash)

1. Loosen set screw before making adjustments.

2. Turn adjusting nut in pivots down (clockwise) only enough to capture push rods in recesses.

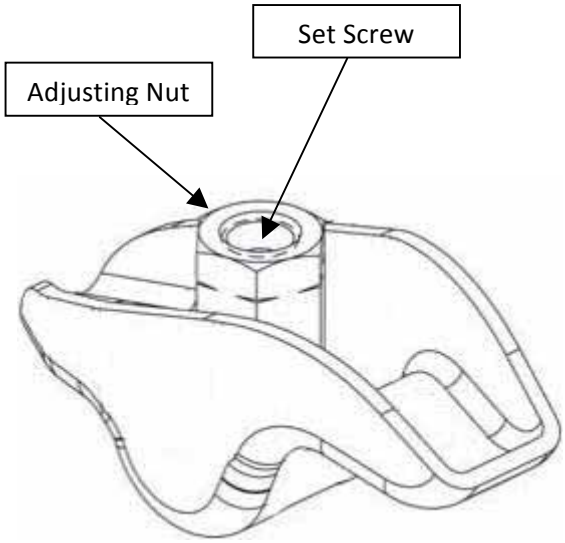

3. Rotate crankshaft to establish TDC on the compression stroke for cylinder 1.
Check for:
a. Compression will be felt through spark plug hole.
b. Keyway of crankshaft will be aligned with cylinder 1.
c. No rocker arm/push rod movement if crankshaft is rotated slightly back and forth. If they are moving, rotate crankshaft 1 full revolution.

4. Insert a 0.127 mm (0.005 in.) feeler gauge between end of 1 valve and rocker arm. Turn adjustment nut until a slight drag is felt. Hold in this position and tighten setscrew securely. After tightening recheck adjustment. Proper clearance for all valves is 0.101/0.152 mm (0.004/0.006 in.).

5. Repeat procedure for other valve on side 1.

6. Viewed from PTO end, rotate crankshaft 270° (3/4 turn) counterclockwise and align crankshaft keyway with cylinder 2. This cylinder should now be at TDC on the compression stroke.

7. Repeat steps 4-5 for setting valve clearance on side 2.

8. Rotate crankshaft to check for free operation of valve train. Check for clearance between valve spring coils at full lift, or bending of push rod(s) can occur. Minimum allowable clearance is 0.25 mm (0.010 in.).

Check Assembly
Slowly rotate crankshaft a minimum of 2 revolutions to check Long block assembly and overall proper operation.

Power Equipment and Technology
Station # 7
Valve Clearance
Judges Answer Sheet
(95 points)

This station will test your ability to properly set valve lash on a 90° V-twin cylinder Kohler engine. Please read the instructions carefully before making adjustments. Please note that cylinder 1 & 2 are labeled on the engine casting and the long end of the crankshaft is the PTO. All tools needed are provided for you and you may write on this sheet. **Each Question is worth 10 points. Each correct setting is worth 15 points.**

1. **What is the correct Intake valve clearance?**
   - ___0.127mm or 0.101/0.152mm (0.005in. or 0.004/0.006in.)_____

2. **What is the correct Exhaust valve clearance?**
   - ___0.127mm or 0.101/0.152mm (0.005in. or 0.004/0.006in.)_____

3. **Valve overlap is found at TDC on the compression stroke.** True/False

4. **Does this engine use compression release?** Yes/No

For Judges Use Only

---

5. **Is #1 Intake set correctly?** Yes/No

6. **Is #1 Exhaust set correctly?** Yes/No

7. **Is #2 Intake set correctly?** Yes/No

8. **Is #2 Exhaust set correctly?** Yes/No

Contestant #
_____

SkillsUSA
Champions at Work®

Total Score
_____
Judges Use Only

Power Equipment and Technology
Station # 7
Valve Clearance
Student Score Sheet
(95 points)

This station will test your ability to properly set valve lash on a 90° V-twin cylinder Kohler engine. Please read the instructions carefully before making adjustments. Please note that cylinder 1 & 2 are labeled on the engine casting and the long end of the crankshaft is the PTO. All tools needed are provided for you and you may write on this sheet. **Each Question is worth 10 points. Each correct setting is worth 15 points.**

1. **What is the correct Intake valve clearance?**
   - _____

2. **What is the correct Exhaust valve clearance?**
   - _____

3. **Valve overlap is found at TDC on the compression stroke.** True/False
   (circle your answer)
4. **Does this engine use compression release?** Yes/No
   (circle your answer)

For Judges Use Only

---

5. **Is #1 Intake set correctly?** Yes/No

6. **Is #1 Exhaust set correctly?** Yes/No

7. **Is #2 Intake set correctly?** Yes/No

8. **Is #2 Exhaust set correctly?** Yes/No

Score _____

Contestant Number _____

Fuel Systems Test

Using the information learned from yesterday's orientation session, answer the following questions. Each question is worth 3 points and the essay question is worth 25 points.

3 points 1. Phase separation is when the ethanol absorbs too much water and the water/ethanol falls out of the gas?

True
False

3 points 2. Five precautions will delay the deterioration/evaporation of gasoline: Cap containers tightly, Use only EPA approved storage containers, Store containers out of direct sunlight in a location where the temperature stays below 80°F, Use a good quality fuel stabilizer and:

a) Fill containers about 95% full
b) Keep the gas can empty at all times
c) Purchase 5 years worth of gasoline
d) None of the above

3 points 3. When water and ethanol are mixed together, the solution has a neutral pH level?

True
False

3 points 4. What can corrode a carburetor and its components (bowl, jets, etc.)? Why?

Water and ethanol because it has a corrosive value

3 points 5. Ethanol is commonly made from –

a. Corn
b. Peas
c. Wheat
d. Alcohol

3 points Fuel Hygiene is the management of the complete fuel system

True
False

3 points 6. Biofuels are made from plants?

True
False

SkillsUSA Champions at Work®

_____
Contestant Number

3 points 7. An engine will run on marginal fuel?
True
False

3 points 8. Piston rings and other internal engine components can be destroyed by running marginal fuel?
True
False

3 points 9. The sulfur content in Ultra Low Sulfur Diesel (ULSD) has been reduced to _____ for on road use.
a. 10 parts per million
b. 100 parts per million
c. 15 parts per million
d. 500 parts per million

3 points 10. Does ethanol mix with 2-stroke engine oil?
Yes
No

3 points 11. Volatility describes a gasoline's tendency to form _____?
a. Acids
b. Liquids
c. vapors
d. Solids

3 points 12. Ultra Low Sulfur Diesel has increased lubrication?
True
False

3 points 13. Semi-Trucks that are pumping out black exhaust smoke probably have a problem with:
a. Water in the fuel
b. Microbial growth
c. Sludge build up in the tanks
d. All of the above

3 points 14. Biofuels have the same BTU's as plain fuel?
True
False

SkillsUSA
Champions at Work®

Contestant Number

Essay Question

25 points

Explain why we use Bio-Fuels and in your opinion explain if using Bio-Fuels are worth it.

Score _____

Contestant Number _____

Fuel Systems Test

Using the information learned from yesterday's training session, answer the following questions. Each question is worth 3 points and the essay question is worth 25 points.

3 points 1. Phase separation is when the ethanol absorbs too much water and the water/ethanol falls out of the gas?
True
False

3 points 2. Five precautions will delay the deterioration/evaporation of gasoline: Cap containers tightly, Use only EPA approved storage containers, Store containers out of direct sunlight in a location where the temperature stays below 80°F, Use a good quality fuel stabilizer and:
a) Fill containers about 95% full
b) Keep the gas can empty at all times
c) Purchase 5 years worth of gasoline
d) None of the above

3 points 3. When water and ethanol are mixed together, the solution has a neutral pH level?
True
False

3 points 4. What can corrode a carburetor and its components (bowl, jets, etc.)? Why?

_____

_____

3 points 5. Ethanol is commonly made from –
a. Corn
b. Peas
c. Wheat
d. Alcohol

3 points 6. Fuel Hygiene is the management of the complete fuel system
True
False

3 points 7. Biofuels are made from plants?
True
False

SkillsUSA
Champions at Work®

_____
Contestant Number

3 points 8. An engine will run on marginal fuel?
True
False

3 points 9. Piston rings and other internal engine components can be destroyed by running marginal fuel?
True
False

3 points 10. The sulfur content in Ultra Low Sulfur Diesel (ULSD) has been reduced to _____ for on road use.
a. 10 parts per million
b. 100 parts per million
c. 15 parts per million
d. 500 parts per million

3 points 11. Does ethanol mix with 2-stroke engine oil?
Yes
No

3 points 12. Volatility describes a gasoline's tendency to form _____?
a. Acids
b. Liquids
c. vapors
d. Solids

3 points 13. Ultra Low Sulfur Diesel has increased lubrication?
True
False

3 points 14. Semi-Trucks that are pumping out black exhaust smoke probably have a problem with:
a. Water in the fuel
b. Microbial growth
c. Sludge build up in the tanks
d. All of the above

3 points 15. Biofuels have the same BTU's as plain fuel?
True
False

SkillsUSA
Champions at Work®

Contestant Number

Essay Question

25 points

Explain why we use Bio-Fuels and in your opinion explain if using Bio-Fuels are worth it.

Power Equipment Technology

Station #9

Running Station

(75 points)

This phase of the competition will test your ability to diagnose an EFI failure using laptop diagnostics. The engine will currently not start or stay running. There may be more than one failure.

Instructions for diagnostic software:
When asked to “Choose Vehicle” you will need to select the correct engine model from the list.
The engine model - spec is ECH730-3031.

Only two buttons from the main screen above are needed. The key must be turned “On” to establish a “Connection” on the Status bar.

Displays “Diagnostic Trouble Codes”

Data Display (Graph & Meter)

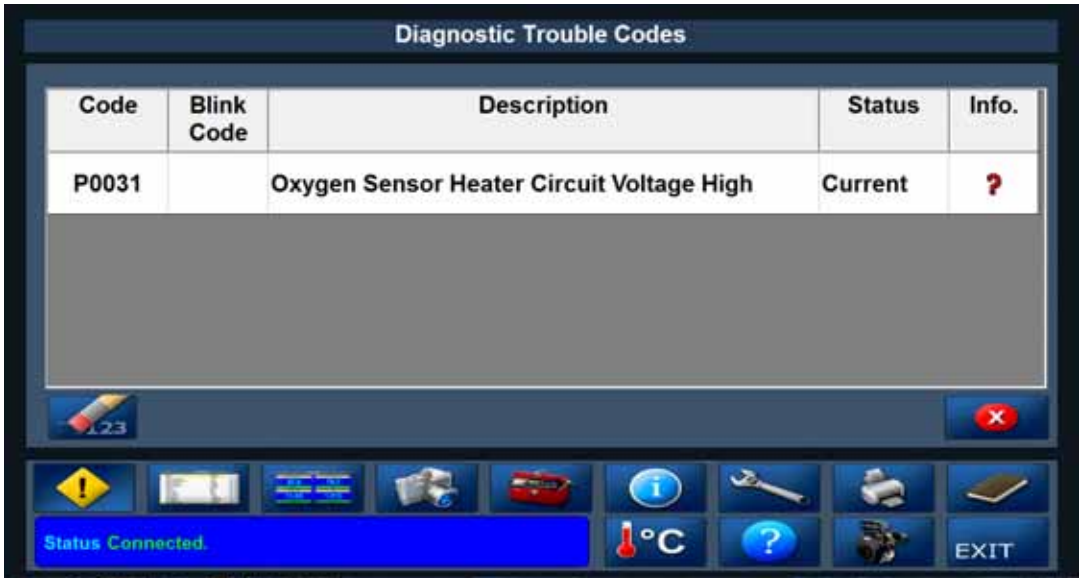

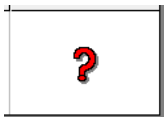
Trouble Code Information

Clear Trouble Codes

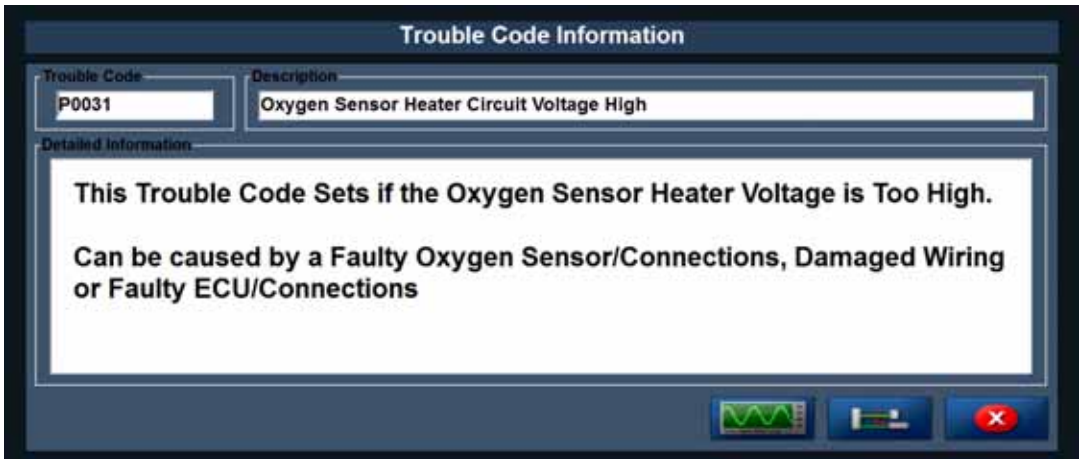

Guided Diagnostics
Follow all instructions. This may include taking voltage or resistance readings.

Wiring Diagram 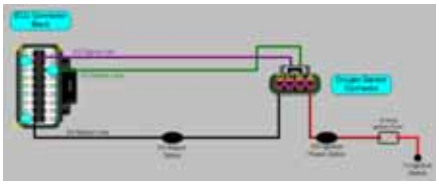
(Example)

With this information and the tools provided, analyze the situation and determine the following.

1.) What number was selected from the “Choose Vehicle” selection list?

2.) What “Current Trouble Code(s)” was/were found with this engine? (example P0031)

3.) What did diagnostic testing indicate? (What did you find wrong with the engine?)

4.) Is the engine repaired and running smooth?

5.) What is the high speed RPM of this engine?

6.) You will need to successfully clear the “Historic” code(s). Are the code(s) cleared?

(Record your answers on the score sheet provided for you by the judge.)

Power Equipment Technology
Station # 9
Running Station

Judges Answer Sheet
(75 points)

1) **Choose Vehicle:**
   Select from 1 through 9 **7** **(5 points)**

2) **List the "Current Trouble Codes" present**
   P0230 & P0352 **(20 points)**

3) **What did diagnostic testing indicate? (example: shorted wire)**
   Coil and Pump were unplugged **(20 points)**

4) **Is the engine repaired and running smooth? (Y/N)**
   Yes **(15 points)**

5) **What is the engine high speed RPM?**
   3600 RPM **(10 points)**

6) **Are all codes cleared? (Y/N)**
   Yes **(5 points)**

Contestant #
_____

Total Points
_____
For Judges Use Only

Power Equipment Technology
Station # 9
Running Station

Answer Sheet
(75 points)

1) **Choose Vehicle:**
   Select from 1 through 9 _____ **(5 points)**

2) **List the "Current Trouble Codes" present:**
   _____ **(20 points)**

3) **What did guided diagnostic testing indicate? (example: shorted wire)**
   _____ **(20 points)**

4) **Is the engine repaired and running smooth? (Y/N)**
   ___ **(15 points)**

5) **What is the engine high speed RPM?**
   _____ **RPM** **(10 points)**

6) **Are all codes cleared? (Y/N)**
   ____ **(5 points)**

Contestant #
_____

SkillsUSA Champions at Work®

Score
_____

2014
Power Equipment Technology
Station # 10 – 2-Stroke Running
SCORE SHEET (90 points)

CUSTOMER COMPLAINT:

The trimmer engine runs well with a full tank of fuel. The engine runs poorly and dies out if tipped sideways to edge or when the fuel tank is less than half full.

WORK DONE SO FAR:

The engine has already passed the compression test, ignition test, crankcase pressure/vacuum test and there are no exhaust restrictions.

TROUBLESHOOT & REPAIR FUEL SYSTEM: (Use **Engine Evaluation Worksheet**)

1. What fuel system repair part(s) or fuel system maintenance part(s) are needed to fix the engine?

   Intake fuel line has hole (**10pts**)

   _____

   Dirty fuel filter (**10pts**)

   _____*Ask judge for part(s)*

   (20 Points)

   Fuel Filter Install (**10pts**) Fuel Line Install (**20pts**)

2. Repair the engine by correctly replacing the part(s) listed above.

   Check fuel filter has clamp & is down in tank **(30 Points)** Is tank grommet seated? Carb line connections ok?

3. Start repaired engine and test run. (Use **Service Data Sheet** to check rpm specs.)

   Check WOT (**10pts**) Wide open throttle rpm? ____????____ Within specs? _____ Check Idle (**10pts**)

   Idle rpm?* ____????____ Within specs? _____ Adjust idle speed (**10pts**)

   *Adjust idle speed if needed. String head must not turn on idle.

   (30 Points)

4. Name two parts on this engine controlled by emissions regulations?

   _____

   (10 Points)

   • Electronic Ignition System • Spark Plug • Catalytic Converter / Muffler Assembly • Carburetor (complete assembly or replaceable components) • Choke • Fuel-Injection Assembly (or replaceable components) • Fuel Tank • Fuel Cap Assembly • Air Filter • Fuel Feed Line (and associated clamps/connectors as applicable) (**10pts** for 2 correct)

Contestant #
_____

Score
_____

2014
Power Equipment Technology
Station # 10 – 2-Stroke Running
SCORE SHEET (90 points)

CUSTOMER COMPLAINT:

The trimmer engine runs well with a full tank of fuel. The engine runs poorly and dies out if tipped sideways to edge or when the fuel tank is less than half full.

WORK DONE SO FAR:

The engine has already passed the compression test, ignition test, crankcase pressure/vacuum test and there are no exhaust restrictions.

TROUBLESHOOT & REPAIR FUEL SYSTEM: (Use **Engine Evaluation Worksheet**)

1. What fuel system repair part(s) or fuel system maintenance part(s) are needed to fix the engine?

   _____

   _____*Ask judge for part(s)*

   (20 Points)

2. Repair the engine by correctly replacing the part(s) listed above.

   (30 Points)

3. Start repaired engine and test run. (Use **Service Data Sheet** to check rpm specs.)

   Wide open throttle rpm? _____ Within specs? _____

   Idle rpm?* _____ Within specs? _____

   *Adjust idle speed if needed. String head must not turn on idle.

   (30 Points)

4. Name two parts on this engine controlled by emissions regulations?

   _____

   (10 Points)

2014
Transmission Assembly
Station #11
Judges Instructions

This Skill will test the contestant's ability to locate information using the manual provided and apply it to the assembly procedure.

Instructions: The contestant must determine proper assembly procedures and orientation of the component parts and assemble this 700-Series transmission. They will be judged on the following areas:

Unit Identification from ID Label: Record the correct unit information from the transmission ID tag on the Post-It-Note® provided. **(3 points)**

Shift Collar Orientation: The "thick" side of the shift collar MUST face the key tips and gears. **(5 points)**

Shift Keys: The shift collar must connect the two keys at the slotted end of the keys.
2 @ 3 points: Keys in slots; 2 @ 3 points: Keys in collar **(12 points)**

Gear Orientation: The orientation of the gears on the 700 is critical because there is a recess on all of them. A shift washer goes on the shaft first, then the largest gear flat side goes towards the shaft shoulder. The shift washers go in between the gears with flat/concave sides of washers to flat sides of gears, working from largest to smallest. **(22 points)**

Shift washer orientation: The chamfered (bubbled) side faces toward the shift-key collar, and the flat/concave sides face the flat sides of gears. **(8 points)**

Thrust Washers: They all have to fit the shafts and the purpose. **(10 points)**

Shift-Shaft & Fork Orientation: The shifter fork should have the pins in the proper place in the shift-collar slot, and be properly located in the case. **(3 points)**

Bushings: Tabs and flanges in place, and seated properly. **(12 points)**

Total **75 Points**

2014
Power Equipment Technology
Station #11
Power Train
Instructions

NOTE: Due to time limitations, the brake has been left off this transmission, and the shift-detent ball, spring and plug have already been removed. In a working transmission, the brake will be mounted on the outside of the shifter/brake shaft, opposite of the drive sprocket. The shift-detent fits into the top case.

This test will determine your ability to re-assemble a transmission by locating information using the manual provided and applying it to the assembly procedure. Determine the proper procedures and orientation of the component parts. The judge will score you on the following areas:

Unit Identification
Shift Collar Orientation
Shift Keys
Gear Orientation
Shift-Washer Orientation
Thrust Washers
Shift-Shaft-&-Fork Orientation
Bushings

Record the Unit Identification on the Post-It Note® pad provided, for collection by the judge. When the assembly is complete, have the judge inspect the assembly. After the judge's inspection, if time allows, the contestant should disassemble the unit in preparation for the next contestant.

2014
Power Equipment Technology
Station #11
Power Train
Contestant Score Sheet

Unit Identification from ID Label _____ (3 points)

Shift Collar Orientation: _____ (5 points)

Shift Keys: 2 @ 3 Points: Keys in slots _____ (12 points)

2 @ 3 Points; Keys in collar

Gear Orientation:

2 Points each _____ (22 points)

Shift-Washer Orientation: 2 Points each _____ (8 points)

Thrust Washers: 2 Points each _____ (10 points)

Shift-Shaft-&-Fork Orientation: _____ (3 points)

Bushings: Installation: 2 Points each; _____ (12 Points)

Bushing position in case: 2 Points

Score
_____

SkillsUSA
Champions at Work®

Contestant Number
_____

2014
Power Equipment Technology – Station #12
Chainsaw Cutting Attachments

Judge Answer Sheet (75 Points possible)

This Station Tests your ability to:

- ✓ **Identify the correct bar and chain for a chainsaw**
- ✓ **Properly install bar & chain and adjust chain tension on a chainsaw**
- ✓ **Identify the correct file size to file the chain on a chainsaw**

Scenario; A customer has come into your shop and asked you to install a 20" bar & chain loop on his Echo® Chainsaw Model # 650. Using the Oregon® Selector Guide / Catalog provided, answer the following questions:

1. **What is the part number for a 20" Oregon® Pro-Lite® Bar to fit this Echo® Chainsaw? 200GLHD176 – (10 Points)**
2. **How Many Drive Links are in an Oregon® 72LGX Chain Loop that fits this Echo® Chainsaw? 70 Drivers – (10 Points)**
3. **What is the correct File Size for the Oregon® 72LGX Chain? 7/32" – (10 Points)**

Once the questions above have been completed, return this sheet to the judge. The Judge will provide you with the correct Oregon® bar and chain. Wearing gloves for safety, correctly install the Oregon® Bar & Chain on the Echo® Saw and properly tension the chain

(45 Points) – 10 for Gloves, 20 for Installed & chain in right direction, 15 for proper tension

Score
_____

SkillsUSA
Champions at Work®

Contestant Number
_____

2014
Power Equipment Technology – Station #12
Chainsaw Cutting Attachments
Score Sheet

This Station Tests your ability to:

- ✓ **Identify the correct bar and chain for a chainsaw**
- ✓ **Properly install bar & chain and adjust chain tension on a chainsaw**
- ✓ **Identify the correct file size to file the chain on a chainsaw**

Scenario; A customer has come into your shop and asked you to install a 20” bar & chain loop on his Echo® Chainsaw Model # 590. Using the Oregon® Selector Guide / Catalog provided, answer the following questions:

1. **What is the part number for a 20” Oregon® Pro-Lite® Bar to fit this Echo® Chainsaw? _____**
2. **How Many Drive Links are in an Oregon® 72LGX Chain Loop that fits this Echo® Chainsaw? _____**
3. **What is the correct File Size for the Oregon® 72LGX Chain? _____**

Once the questions above have been completed, return this sheet to the Judge. The Judge will provide you with the correct Oregon® bar and chain. Wearing gloves for safety, correctly install the Oregon® Bar & Chain on the Echo® Saw and properly tension the chain.

SkillsUSA
2015 Contest Projects

Practical Nursing

Click the “Print this Section” button above to automatically print the specifications for this contest. Make sure your printer is turned on before pressing the button.

PN

Scenario's + Answer Key

Judge Initials _____ Contestant Number _____

SkillsUSA Championships
2015

Handwashing and Gloving

Points earned _____/out of 195 = _____%

Performance Points	*Pts. Poss.*	*Pts. Earned*	*Remarks*
1. Assembled equipment (soap, towels, orange stick/nail file, wastebasket - collects missing items)	5		
2. Pushed watch up arm 4 to 5 inches. If uniform sleeves were long, pushed them up.	5		
3. Stood so that clothes did not touch the sink.	5		
4. Stood so the soap and faucet were easy to reach.	5		
5. Did not touch inside of sink at any time.	5		
6. Turned on and adjusted the water until it felt warm.	5		
7. Wet wrists and hands. Kept hands lower than elbows.	5		
8. Wet the area 3 to 4 inches above the wrists.	5		
9. Applied about 1 teaspoon of soap to hands.	5		
10. Rubbed palms together and interlaced fingers to work up a good lather for at least 15 seconds.	5		
11. Washed each hand and wrist thoroughly.	5		
12. Cleaned well between fingers, all the way to tips	5		
13. Cleaned top of both hands, covering all surfaces	5		
14. Cleaned under fingernails:			
a. rubbed fingertips against palms	5		
b. cleaned under fingernails with nail file or orange stick	5		
15. Rinsed wrists and hands well. Water flowed from the wrists to fingertips.	5		
16. Rinsed thoroughly, removed all soap	5		
17. Dried wrists and hands with a clean, dry paper towel.	5		
18. Patted dry starting at fingertips.	5		
19. Kept fingertips below wrists while drying.	5		
20. Discarded the paper towels into the wastebasket.	5		

21. Turned off faucets with clean, dry paper towels.	5		
22. Discarded paper towels into the wastebasket.	5		
23. Put on gloves	5		
REMOVES GLOVES:			
24. Touched outside of glove with outside of glove only	5		
25. Grasped outside of glove just above the cuff.	5		
26. Pulled glove down over hand so it was inside out	5		
27. Contaminated part of glove does not come into contact with skin	5		
28. Held removed glove with other gloved hand	5		
29. Reached inside the other glove with the fingers of ungloved hand	5		
30. Pulled glove down, inside out, over hand and other glove	5		
31. Contaminated part of glove did not come into contact with skin	5		
31. Removed gloves without snapping/popping gloves	5		
32. Discarded gloves in proper receptacle	5		
33. Hand hygiene (may verbalize)	5		
ATTITUDE			
a. toward supervisors (judges)	5		
b. toward task	5		
COMMUNICATION SKILLS			
a. facial expressions	2		
b. ability to listen	2		
c. interprets/implements oral/written directions	2		
d. accuracy of oral/written terminology	2		
SPEED IN COMPLETION OF TASK			
a. completed within alloted time	2		
Total	195		

JUDGE COMMENTS:

Judge Initials _____ Contestant Number _____

SkillsUSA Championships
2015

Adult CPR w AED

Points earned _____/out of 145 = _____%

1. Places manikin on firm surface in supine position	5		
2. Checks scene safety	5		
3. Checks responsiveness and signs of consciousness	5		
3. Activates EMS system	5		
5. Administers chest compressions as follows:			
a. Places heel of hand on lower half of sternum	5		
b. Gives compressions at a rate of 100 per minute	5		
c. Compresses chest to 2 inches, fast and hard	5		
6. Gives two ventilations after every thirty compressions:	5		
a. Opens airway, using head tilt/chin lift method	5		
b. Looks, listens and feels for respirations for 5-10 seconds	5		
c. Gives 2 slow full breaths	5		
7. Repeats cycle of 30:2 for 2 minutes	5		
8. Checks pulse and breathing for 5-10 seconds	5		
****Tell contestant that patient has no pulse and respirations.****			
9. Properly verbalizes what should be done if no pulse.	5		
10. Uses AED at appropriate time	5		
a. Gets AED after one minute of cycles	5		
b. Properly places pads	5		
c. Listens and follows instructions of AED	5		
d. Continues with CPR as instructed without delay	5		
e. Continues to follow AED instructions until told by judge to do otherwise	5		
****Tell contestant that patient has a pulse and respirations.****			
10. Positions patient in recovery position	5		
11. Stays with person until help arrives	5		
12. Attitude:			
a. toward patient	5		
b. toward supervisors (judges)	5		
c. toward task	5		
13. Communication skills:			
a. facial expressions	5		
b. ability to listen	5		
c. interprets/implements oral/written directions	5		
14. Safety measures:			
a. Utilizes safety precautions for patient & self	5		
TOTAL	145		

JUDGE COMMENTS:

SkillsUSA 2015

Practical Nursing Competition

Medication Administration

Time Limit: 15 Minutes

3 Minute Warning will be Given

Scenario: Your first patient of the day for your medication administration is a 40 year-old male, Mr. John Doe, who was admitted two days ago with colitis. He has a history of atrial fibrillation, GERD, and HTN. Allergies listed are Sulfa drugs, Phenergan, and Morphine. You enter the medication room and have pulled up the first order. The order is as follows:

Promethazine 12.5 mg PO now and repeat again in 8 hours X 1.

Digoxin 0.25 mg PO daily.

Contestant Information: Medication administration is one of the most important skills a Practical Nurse learns. Correct technique, medication knowledge, correct dosage calculation, critical thinking, and safety are all part of the medication administration process. Please prepare and administer the medications listed in the above scenario. Let the judge know when you are ready to begin.

Answer Key

SkillsUSA 2015

Practical Nursing Competition

DIRECTIONS: Listed below is a description of triage levels according to the Emergency Severity Index. After reviewing the triage levels, please read the five patient scenarios below and prioritize the scenarios according to severity.

Triage Levels According to ESI (Emergency Severity Index):

Level I: Critical

Level II: Emergent

Level III: Urgent

Level IV: Semi-urgent

Level V: Non-urgent

1. 24 y/o female presents with a three day history of lower abd pain, nauseated. Denies any cramping, discharge or abnormal bleeding.

Vital signs HR 120, RR 22, temp 99.0 , BP 122/78, O2 Sat 98%, pain 8/10

LMP unknown Gravida 2 Para 0

Due to the patient's LMP being unknown and a hx of gravida 2 with no live births, patient should be level IV.

Connect to BP machine and pulse ox anticipate IV, lab drawn CBC, BMP, HCG quantative, UA urine pregnancy, abd and pelvic ultra sound to pregnancy rule out possible miscarriage.

2. 55 y/o male presents with chest pain that started the prior day. Patient also reports breaking out in "cold sweat" and complains of slight nausea. Hx of diabetes & HTN.

Vital signs: HR 90, RR 20, temp 97.6, BP 165/101, O2 Sat 92 %, pain 5/10

ESI level II

EKG should be done with 5 minutes of arrival and shown to the physician to determine any ST elevations or major changes

Place patient on 2 liters BNC, Anticipate placing IV drawing labs CBC, CMP, Tn-t, protime, Ptt, INR, ASA, NTG ointment

No changes on EKG but Tn-t comes back elevated anticipate beta-blocker and possible transfer to cath lab

3. 10 y/o male while running and playing football fell and twisted right ankle, patient was able to bear weight initially on right ankle, after arriving home began complaining of increased pain with ambulation. Right ankle has moderate swelling with some slight bruising.

Vital signs: HR 114, RR 18, temp 98.6, BP 114/67, O2 Sat 99%, pain 4/10

ESI V

Anticipate Xray 3 view of right ankle and foot which comes back negative for fracture dx ankle sprain

Ace wrap instructions elevate next 24 hours, follow-up with PCP next 3 days return if worse, sometimes due to swelling

Fractures are missed on initial xray

4. 74 y/o male brought in via ambulance with acute dyspnea and hx of CHF. Heart rate 166 beats per minute, irregular via auscultation. BP 180/110, respirations 34 times a minute with some accessory muscle use. O2 Sat is 86% on 100% NRB, patient is slight agitated & pulling at mask. Lung sounds via auscultation reveals wheezing in all lobes anterior and posterior.

ESI level I

EKG immediately upon arrival present to physician afterwards Afib RVR

Place on cardiac monitor while also connecting to blood pressure, continuous pulse ox

Call for resp therapy ABGs and breathing treatment albuterol and xopenex unit dose

Place IV, draw CBC, CMP, BNP, Protime, Ptt, INR, Tn-t

Anticipate STAT PCXR

Dx. Pulmonary edema, anticipate Lasix, low dose morpine, ativan and BiPaP

5. 35 y/o male with 2 day hx of vomiting and right flank pain radiates to right groin, unable to keep anything (solids or liquids) down without vomiting. Patient is unable to sit still, very restless, writhing in pain. Reports difficulty and pain with urination.

Vital Signs: HR 134, RR 28, temp 100, O2 Sat 98%, BP 188/110, pain 10/10

ESI III but due to BP and pain level patient should be brought back and placed in a room or hall bed

Anticipate IV, labs CBC, CMP, UA, CT scan abd, IV fluids and pain medication

Dx kidney stone

Answer Key

SkillsUSA 2015
Practical Nursing Competition

Basic ECG Interpretation Test

DIRECTIONS: The following test consists of 20 questions. Please answer each question to the best of your ability.

1.

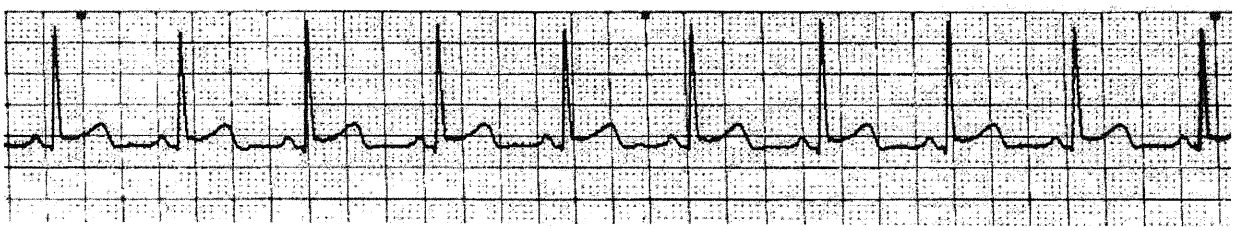

A. Normal Sinus Rhythm
B. Sinus Tachycardia
C. NSR with PAC's
D. NSR with 1st Degree AV Block
E. NSR with PVC's

2.

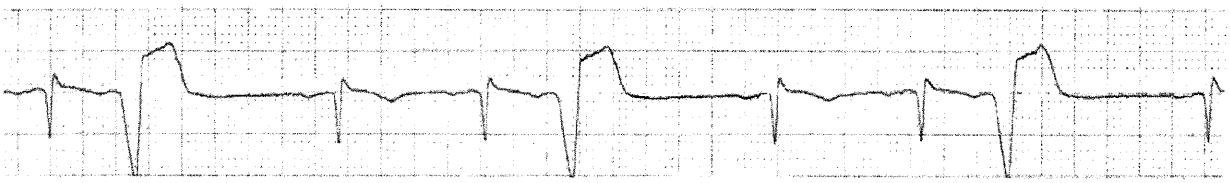

A. Sinus Rhythm with PAC's
B. Junctional Rhythm
C. 2nd Degree AV Block, Type I
D. 3rd Degree AV Block
E. Normal Sinus Rhythm with PVC's

3.

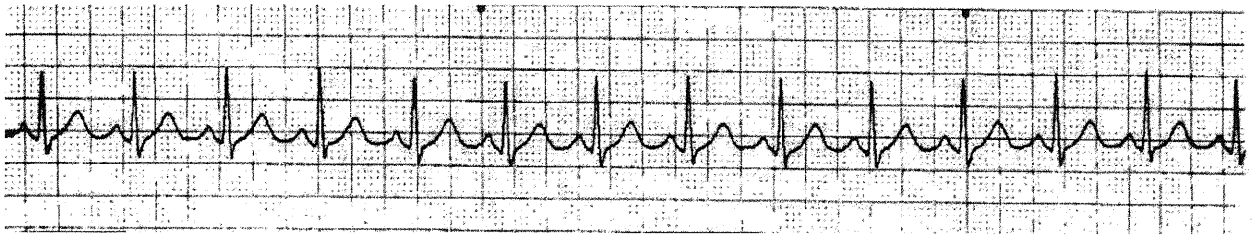

A. Sinus Tachycardia
B. Junctional Tachycardia
C. Atrial Fibrillation with Rapid Ventricular Response
D. Atrial Flutter
E. NSR

4. 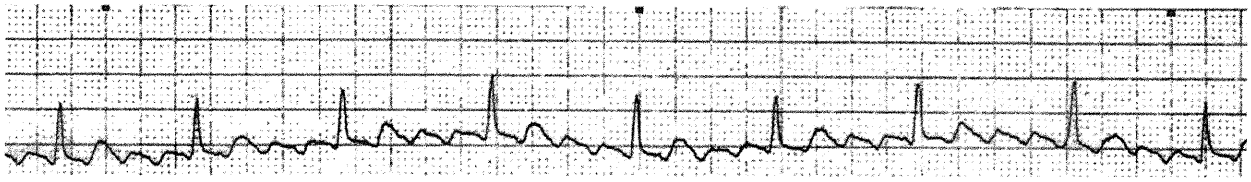

A. Sinus Tachycardia
B. Atrial Fibrillation
C. Atrial Flutter
D. Junctional Rhythm
E. Ventricular Tachycardia
F. Ventricular Fibrillation

5. 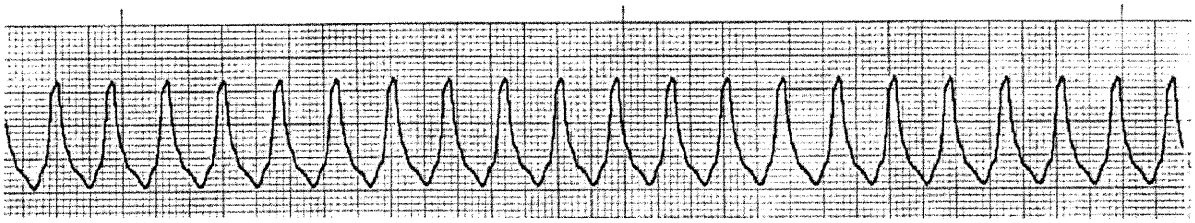

A. Supraventricular Tachycardia (SVT)
B. Atrial Flutter
C. Ventricular Tachycardia
D. Ventricular Fibrillation
E. Asystole

EKG Test Answer Key

1. A
2. E
3. A
4. C
5. C

Judge Initials _____ Contestant Number _____

SkillsUSA Championships
2015

Measuring and Recording Blood Pressure and Pulse

Points earned _____/out of 195 = _____%

	Pts. Poss.	*Pts. Earned*	*Remarks*
Performance Points			
1. Assembles equipment for taking Vital Signs	5		
2. Performs hand hygiene	5		
3. Knocks on door, introduces self, and identifies patient using two identifiers, explains procedure	5		
4. Provides privacy	5		
5. Obtains patient permission	5		
6. Assures patient is comfortable	5		
PULSE			
7. Places fingers correctly for counting pulse	5		
8. Counts pulse for at least 30 seconds	5		
9. Obtains correct count to +/- 2 beats per minute	5		
10. Notes rhythm and volume	5		
BLOOD PRESSURE			
16. Cleans stethoscope earpeices and bell/disk with alcohol	5		
17. Applies BP cuff correctly	5		
18. Places stethoscope in ears correctly	5		
19. Locates brachial artery and places bell correctly	5		
20. Inflates cuff properly	5		
21. Reads pressure to +/- 2 mm Hg	5		
22. Recognizes abnormal V/S measurements and reports immediately	5		
23. Cleans stethoscope earpeices and bell/disk with alcohol	5		
24. Observes patient for comfort	5		
25. Observes checkpoints before leaving:			
a. Lowers bed to lowest level	5		
b. Places call signal and supplies within reach	5		
c. Opens curtain	5		
d. Leaves area neat and clean	5		
26. Hand hygiene (may verbalize)	5		
27. Reports any abnormal findings	5		
28. Organization of work:			

a. arrives at contest ready to begin skill problem	5		
b. reads problems/checks assumptions/questions	5		
c. obtains necessary equip to complete problem	5		
d. organizes equip/solves problem conveniently	5		
29 Attitude:			
a. toward patient	5		
b. toward supervisors (judges)	5		
c. toward task	5		
30. Communication skills:			
a. facial expressions	5		
b. ability to listen	5		
c. attempt to lower patient anxiety	5		
d. interprets/implements oral/written directions	5		
e. accuracy of oral/written terminology	5		
31. Safety measures:			
a. Utilizes safety precautions for patient & self	5		
32. Speed in completion of task:			
a. completed within alloted time	5		
Total	195		

Judge Initials _____ Contestant Number _____

SkillsUSA Championships
2015

Job Interview and Resume

Points earned _____/out of ~~135~~ 60 +50 = _____%

JOB INTERVIEW			
1. Dresses appropriately for interview			
a. Uniform is neat and clean	5		
b. Hair is orderly and pulled back from face	5		
c. Minimal amount of make-up/clean shaven	5		
d. Minimal amount of jewelry is worn	5		
e. Shoes are appropriate	5		
2. Introduces self and shakes hands firmly if indicated	5		
3. Refers to employer by name	5		
4. Sits correctly with good posture	5		
5. Listens closely to employer's questions/comments	5		
6. Speaks slowly and clearly without mumbling	5		
7. Smiles but avoids excessive laughter or giggling	5		
8. Maintains eye contact with employer	5		
9. Avoids mannerisms during interview	5		
10. Uses correct English and avoids slang terms	5		
11. Uses correct manners and acts politely	5		
12. Avoids smoking, chewing gum, eating candy, etc.	1		
13. Asks questions pertaining to job responsibility and avoids questioning fringe benefits, raises, etc.	4		
14. Thanks employer for the interview at the end	5		
15. Shakes hands firmly if indicated	5		
RESUME			
16. Uses good quality paper	5		
17. Types all information neatly and accurately	5		
18. Follows consistent format/spacing throughout	5		
19. Includes all of the following information:			
a. Personal identification: name, address, telephone	5		

b. Employment objective	5		
c. Educational background: name and address of school, special courses, or training	5		
d. Work or employment experience: name/address of employers, dates employed, job title, description of duties, in order from most recent backward	5		
e. Skills and specific knowledge	5		
f. Other activities; organizations, offices held, awards, volunteer work, hobbies, interests	5		
g. References: full name, title, and address or states "References will be furnished on request"	5		
20. Spells all words correctly	5		
21. Punctuates all information correctly	5		
Total	~~150~~ 60		

JUDGE COMMENTS:

SkillsUSA
2015 Contest Projects

Related Technical Math

Click the “Print this Section” button above to automatically print the specifications for this contest. Make sure your printer is turned on before pressing the button.

Contestant Number _____

2015 SkillsUSA

Related Technical Math Test

INSTRUCTIONS

Please place your contestant number at the top of this page and on the first page of the test. Do all necessary work on the test sheets and place the answers on the answer sheet. Remember to include the correct units on your answers.

You may use any type of calculator and the given formula sheet. Use the calculator value for π. Round your answers to the nearest tenth or cent unless otherwise directions are given. Place the answers on the answer sheet.

In the event of a tie: The judges will determine the winner by the reasoning and overall quality of the work shown to solve the problems.

You will have two hours to complete the test.

© Industrial Press. Adapted from "Technical Shop Mathematics, 3rd Edition" by its author, Thomas Achatz

1) Determine angle *A*. The dimensions shown are in inches.

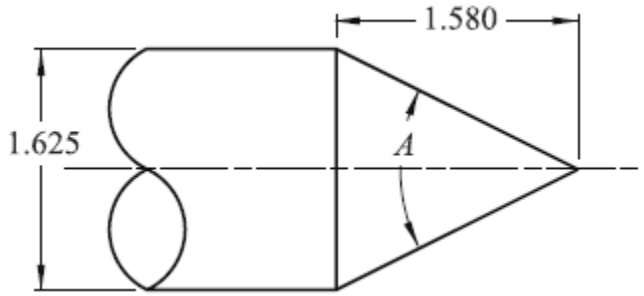

2) Suppose that the mean starting salary of welders in a specific region is $37,480 with a standard deviation of $1,400 and that salaries follow a normal distribution. Approximately what percentage of the salaries will be between $34,680 and $40,280?

© Industrial Press. Adapted from “Technical Shop Mathematics, 3rd Edition” by its author, Thomas Achatz

3) A millwright must use a rough wooden timber measuring 8 by 12 inches. If a timber that is $7\frac{13}{16}$ inches thick is required, and equal thickness are cut from each rough side, how thick are the pieces cut off each side?

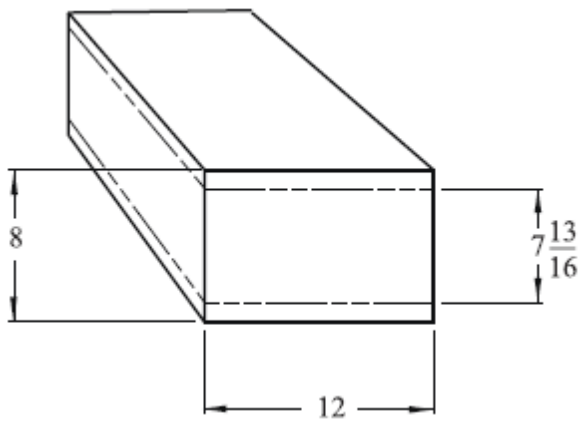

4) A lever has a 140-pound weight on one end and a 160-poound weight on the other end. The lever is balanced, and the 140-pound weight is exactly one foot farther from the fulcrum than the 160-pound weight. How far from the fulcrum is the 160-pound weight?

© Industrial Press. Adapted from “Technical Shop Mathematics, 3rd Edition” by its author, Thomas Achatz

5) Floor tiles measure 8 inches square. How many will be required to tile an office floor containing 1600 square yards?

6) Solve for *x*: $\sqrt{x+3} - 2 = 6$

7) A contractor estimates that 10,032 cement blocks are needed for a job. How many additional blocks must be ordered to provide for 12% scrap and damage?

© Industrial Press. Adapted from "Technical Shop Mathematics, 3rd Edition" by its author, Thomas Achatz

8) To test the flow of coolant through a radiator with a 2 inch diameter passage, a flow of 5 gallons was recorded in 4 minutes. Find the velocity in feet per second of the flow through the radiator.

9) A local pizza parlor is offering a half-price deal on any pizza with one topping. There are eight toppings from which to choose. In addition, there are three different choices for the size of the pizza, and two choices for the type of crust. In how many ways can a pizza be ordered?

10) The local hardware store sells custom-colored paint. A certain orange color needed to match the color on a piece of machinery consists of 1.5 parts red paint and 2 parts yellow paint. How many gallons of red and how many gallons of yellow paint are needed to make 28 gallons of orange paint?

© Industrial Press. Adapted from “Technical Shop Mathematics, 3rd Edition” by its author, Thomas Achatz

11) Let E be the event that a new car requires engine work under warranty and let T be the event that the car requires transmission work under warranty. Suppose that P(E) = 0.10, P(T) = 0.02, and P(E and T) = 0.01. Find the probability that the car needs work on either the engine, the transmission, or both.

12) Calculate the cross-sectional area of the storm drain shown below. Give answer in square feet.

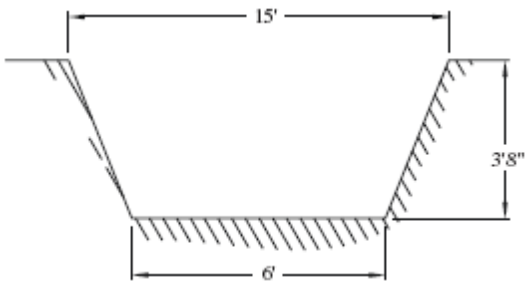

© Industrial Press. Adapted from "Technical Shop Mathematics, 3rd Edition" by its author, Thomas Achatz

13) A lumber yard has 100 hardwood boards, $1\frac{1}{4}$ inches thick by 8 inches wide and 8 feet long in stock. How many board feet is this?

14) The walls of a house are to be covered with insulation board. The actual area is 2604 square feet. How many 8 foot by 4 foot insulation boards must be ordered to allow for 7% waste?

15) Find the number whose log is 0.25.

© Industrial Press. Adapted from "Technical Shop Mathematics, 3rd Edition" by its author, Thomas Achatz

16) A news story reported the number of calories in hamburgers from six fast-food restaurants as 250, 290, 230, 310, 310, and 350. Find the mean number of calories.

17) A sphere is cut from a cube 20 inches on an edge. What is the minimum amount of waste in cubic inches?

© Industrial Press. Adapted from “Technical Shop Mathematics, 3rd Edition” by its author, Thomas Achatz

18) What is the perimeter of the blank shown below? Dimensions are in inches.

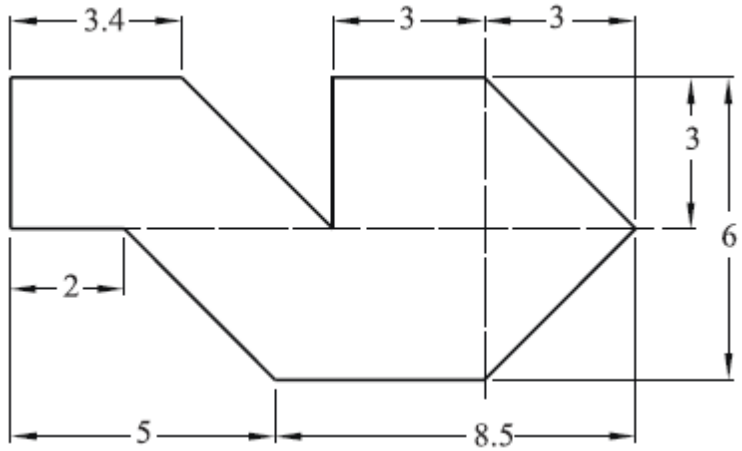

19) Solve for angle *B* in the polygon shown below.

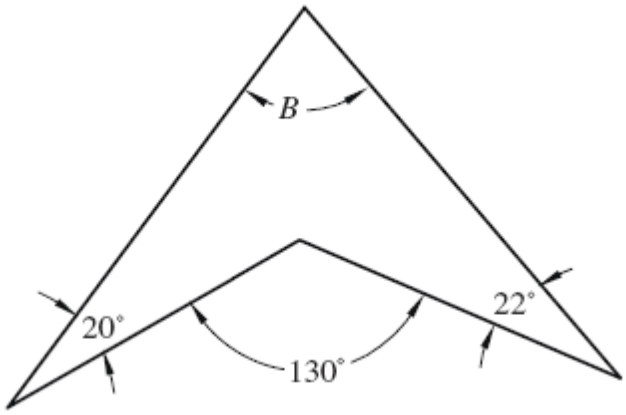

© Industrial Press. Adapted from "Technical Shop Mathematics, 3rd Edition" by its author, Thomas Achatz

20) In the oblique triangle shown below, solve for ∠B.

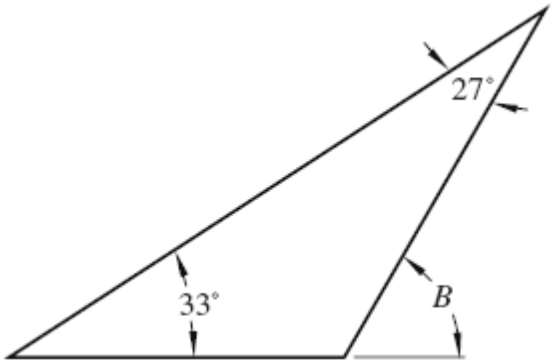

21) The dimensions of the detail shown below are given in inches. Determine the indicated length and width.

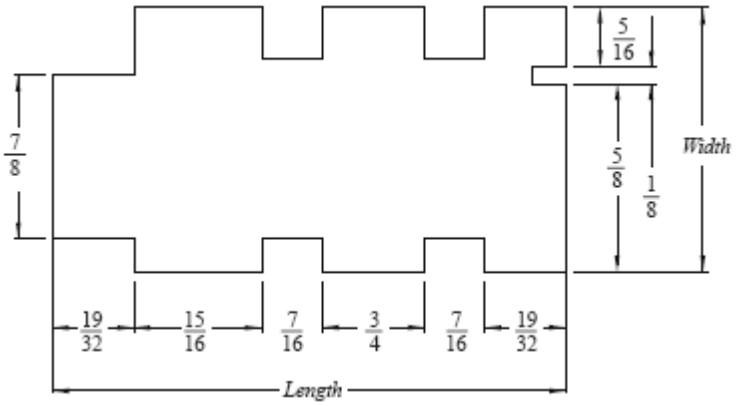

© Industrial Press. Adapted from "Technical Shop Mathematics, 3rd Edition" by its author, Thomas Achatz

22) The lifting capacity of a cable is proportional to the area of its cross section. If a cable 1.5 inches in diameter will lift 10,000 pounds, what will a cable 6.25 inches in diameter lift?

23) In triangle ABC shown below, the sizes of the acute angles are given as ∠CAB = 3x and ∠CBA = 2x. Solve for the two angles in degrees.

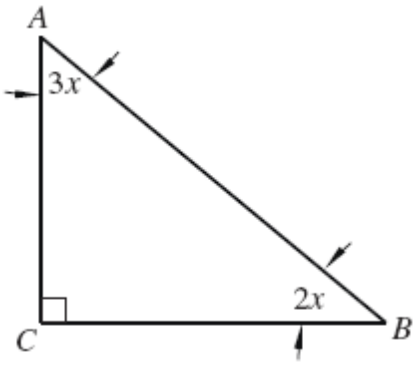

© Industrial Press. Adapted from "Technical Shop Mathematics, 3rd Edition" by its author, Thomas Achatz

24) An equally pitched roof has both sides at the same angle with the horizontal. Two buildings have equally pitched roofs as shown below. The span of the first roof is 160 ft and the vertical height of the second roof is 10 ft. What is the span of the second roof if its span equals the vertical height of the first roof?

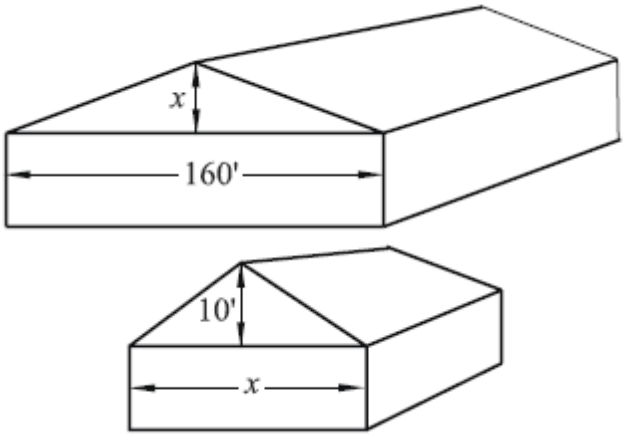

25) Determine the diameter of the circle circumscribed around the hexagon shown below. Dimensions are in centimeters. Round to the thousandths place.

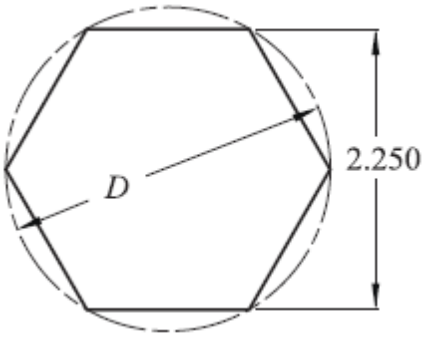

© Industrial Press. Adapted from “Technical Shop Mathematics, 3rd Edition” by its author, Thomas Achatz

26) The principal dimensions of a truss are provided in the figure below. Calculate ∠CHG and the length of HC. All dimensions are in feet.

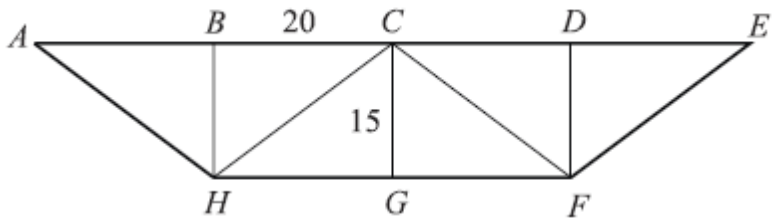

27) In the figure below, ∠CAE ≅ ∠DBE, AE = EB, and angle ∠AEC ≅ ∠DEB. CE is given as 2x − 5 and BD as 3y + 2. Using geometric principles and algebra, solve for x and y.

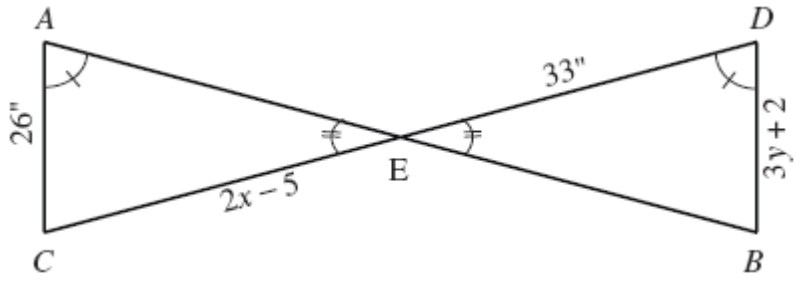

© Industrial Press. Adapted from "Technical Shop Mathematics, 3rd Edition" by its author, Thomas Achatz

28) Flow Q in gallons per minute (gpm) through a pipe with inside diameter d in inches and flow velocity V in feet per second is given by the formula $Q = 2.44d^2V$. How many gpm of water are discharged from a 1.5-inch inside diameter pipe if the flow velocity is 10 feet per second? Round to the tenths place.

29) The plate shown below is to have two holes bored using a boring machine. After hole A is bored, the table of the machine is moved in two directions, X and Y, to locate hole B. Find the distances X and Y when line AB and ∠A have the following measurements: AB = 8.75 inches, ∠A = 45°. Round to the thousandths place.

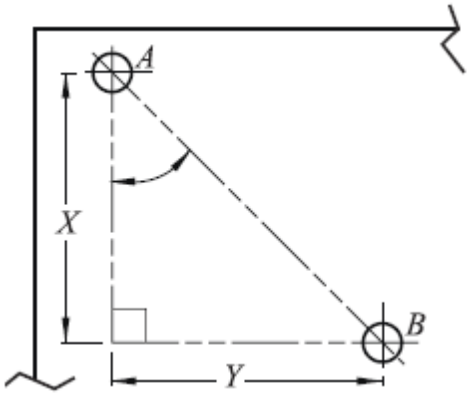

© Industrial Press. Adapted from "Technical Shop Mathematics, 3rd Edition" by its author, Thomas Achatz

30) Determine the length of radius R in the figure below. Dimensions are in inches.

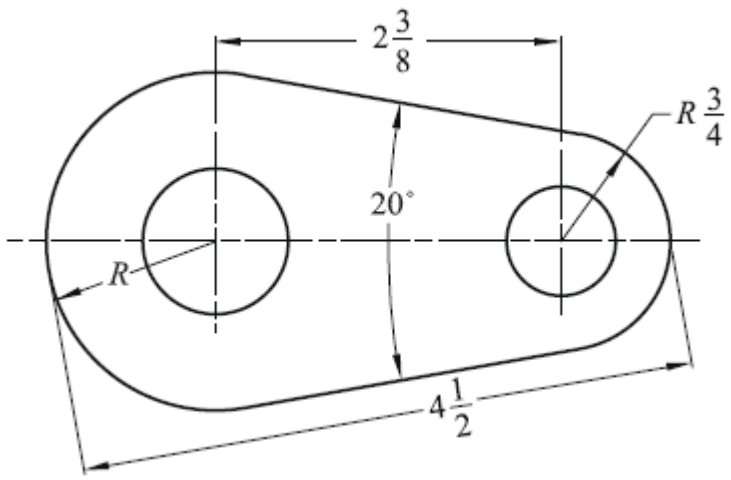

31) In triangle ABC shown in Figure 18.8, segments DE and BC are parallel, DA = 4 inches, AB = 8 inches, DE = 10 inches. Solve for length of side BC.

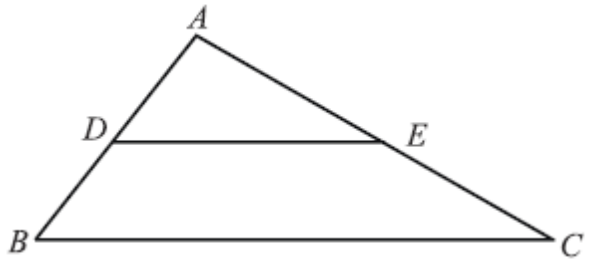

© Industrial Press. Adapted from "Technical Shop Mathematics, 3rd Edition" by its author, Thomas Achatz

32) The weather in Plain City is dry most of the time, but it can be quite rainy in the spring. The rainiest month of the year is April. The table below shows the annual rainfall in Plain City, in inches, for each April from 1982 to 1992. Find the median for the data.

YEAR	RAINFALL
1982	0.7
1983	4.37
1984	5.21
1985	1.23
1986	3.21
1987	2.56
1988	1.89
1989	3.36
1990	5.01
1991	0.56
1992	2.31

33) In the figure below solve for X. Dimensions are in feet.

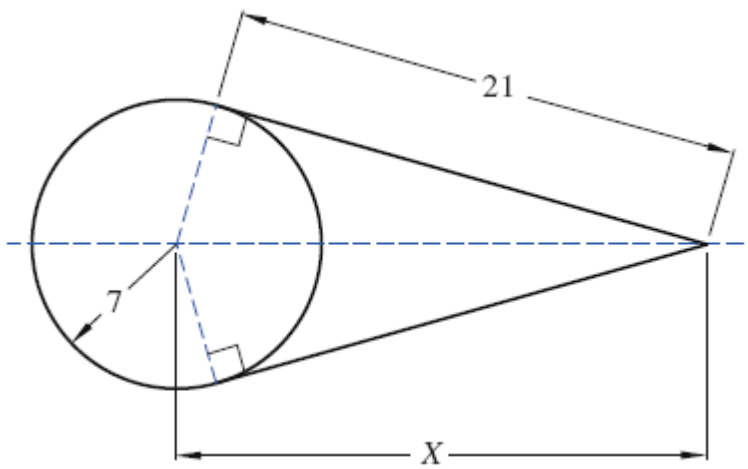

© Industrial Press. Adapted from “Technical Shop Mathematics, 3rd Edition” by its author, Thomas Achatz

34) The elongation of a guy wire varies directly with small loads. What is the elongation of the guy wire when the load is 2500 N if a load of 400 N causes an elongation of 8 mm?

35) Three gears mesh as shown below. Find the distance between points A and C. Dimensions are in centimeters.

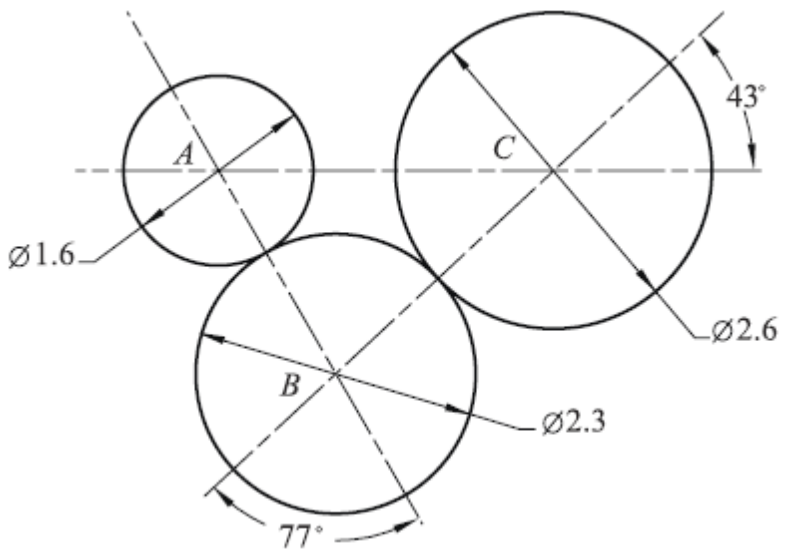

© Industrial Press. Adapted from "Technical Shop Mathematics, 3rd Edition" by its author, Thomas Achatz

36) Calculate the weighted mean for the grade sheet shown below.

	HOMEWORK	QUZZES	TESTS	FINAL
GRADE	90	72	80	95
WEIGHT	0.2	0.15	0.3	0.35

37) A fair coin is tossed 3 times. What is the probability that all three tosses will land tail side up?

38) If the radius of a circle is doubled, by what factor is the area multiplied?

© Industrial Press. Adapted from “Technical Shop Mathematics, 3rd Edition” by its author, Thomas Achatz

39) A special laminated wooden beam is made up of two pieces of planking, each $1\frac{5}{8}$ inch thick, and three pieces of lumber, each $\frac{13}{16}$ inch thick. What is the thickness of the beam?

40) The formula for the sum of the separate resistances in a parallel circuit containing 3 resistors is: $\frac{1}{R} = \frac{1}{R1} + \frac{1}{R2} + \frac{1}{R3}$. What size resistor is needed for R3 if R1 = 2 ohms, R2 = 6 ohms, and the total circuit resistance is 1.33 ohms? Round answer to the tenths place.

© Industrial Press. Adapted from "Technical Shop Mathematics, 3rd Edition" by its author, Thomas Achatz

41) In the figure shown below, solve for dimension X, a chord of the circle, and Y, the circle's diameter. Dimensions are in centimeters.

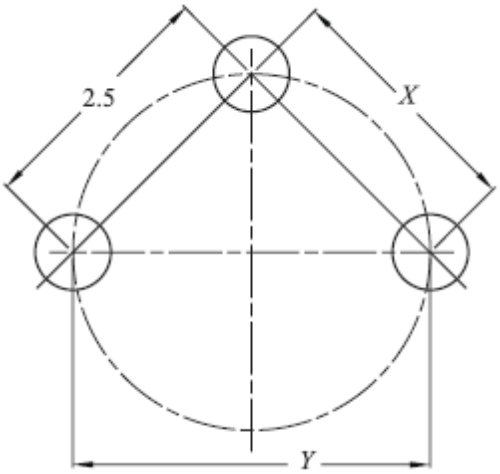

42) Determine ∠B in the figure shown below.

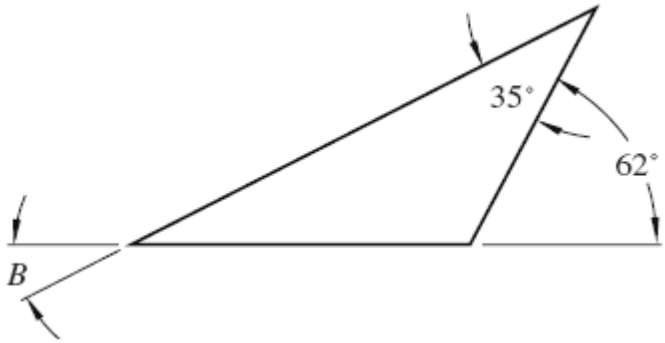

© Industrial Press. Adapted from "Technical Shop Mathematics, 3rd Edition" by its author, Thomas Achatz

43) Five taper reams cost $12. How much would 1 dozen taper reams cost?

44) Solve for x in the expression: $3(x + 2y) = 2(5x - y)$.

© Industrial Press. Adapted from "Technical Shop Mathematics, 3rd Edition" by its author, Thomas Achatz

45) A builder wishes to measure a pond. Right triangle ACB is constructed as shown in the figure below. If AB = 928 feet and ∠A is 29°, find the distance between point B and C.

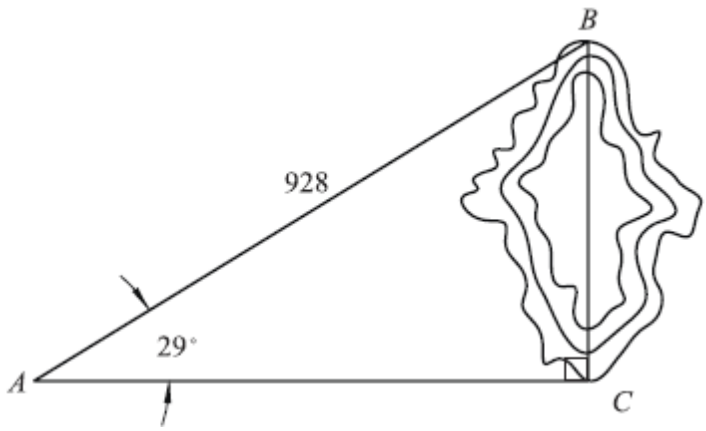

46) Solve the roots of the quadratic equation: $x^2 - 4x + 2 = 0$.

© Industrial Press. Adapted from "Technical Shop Mathematics, 3rd Edition" by its author, Thomas Achatz

47) A population of 600 transistors contains transistors from three lots. The transistors are categorized by lot and by whether they pass an electrical test, with the results shown in the table below. If a transistor is chosen at random from the population, what is the probability that the transistor is from Lot A and passes the electrical test?

LOT	PASS	FAIL
A	88	12
B	165	35
C	260	40

48) Find the equation of the line passing through the points (-3,4) and (-1,-6).

© Industrial Press. Adapted from "Technical Shop Mathematics, 3rd Edition" by its author, Thomas Achatz

49) A person standing 120 feet from the base of a smokestack finds that the angle of elevation (the angle a line from the eye to the object makes with the horizontal) is 50°. If the person's eye is 5 feet 8 inches from the ground, what is the height of the stack? Round to the thousandths place.

50) In the figure shown below, solve for *a* and *h* when *p* = 2 and *q* = 6.

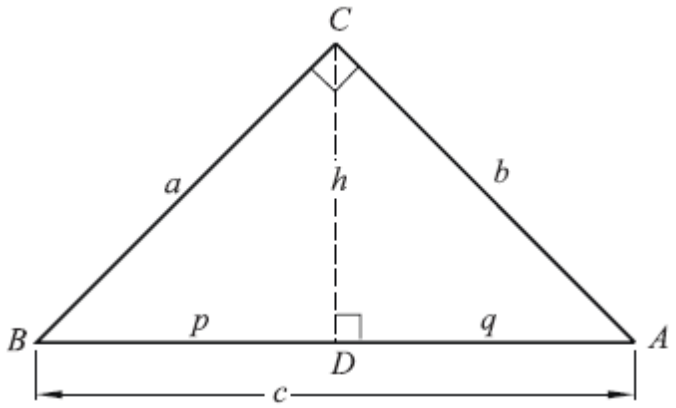

© Industrial Press. Adapted from "Technical Shop Mathematics, 3rd Edition" by its author, Thomas Achatz

Date _____ Contestant Number _____

Answer sheet for 2015 SkillsUSA Related Technical Math Test

1. _____
2. _____
3. _____
4. _____
5. _____
6. _____
7. _____
8. _____
9. _____
10. _____
11. _____
12. _____
13. _____
14. _____
15. _____
16. _____
17. _____
18. _____
19. _____
20. _____
21. _____
22. _____
23. _____
24. _____
25. _____
26. _____
27. _____
28. _____
29. _____
30. _____
31. _____
32. _____
33. _____
34. _____
35. _____
36. _____
37. _____
38. _____
39. _____
40. _____
41. _____
42. _____
43. _____
44. _____
45. _____
46. _____
47. _____
48. _____
49. _____
50. _____

© Industrial Press. Adapted from “Technical Shop Mathematics, 3rd Edition” by its author, Thomas Achatz

Plane Figures

Square:

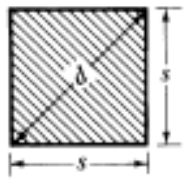

$$\text{Area} = A = s^2 = \tfrac{1}{2}d^2$$
$$s = 0.7071d = \sqrt{A}$$
$$d = 1.414s = 1.414\sqrt{A}$$

Rectangle:

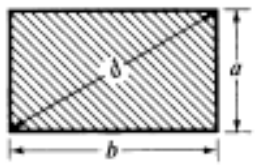

$$\text{Area} = A = ab = a\sqrt{d^2 - a^2} = b\sqrt{d^2 - b^2}$$
$$d = \sqrt{a^2 + b^2}$$
$$a = \sqrt{d^2 - b^2} = A \div b$$
$$b = \sqrt{d^2 - a^2} = A \div a$$

Parallelogram:

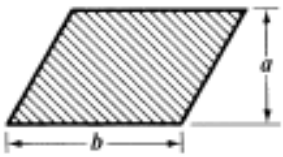

$$\text{Area} = A = ab$$
$$a = A \div b$$
$$b = A \div a$$

Note: The dimension a is measured at right angles to line b.

Trapezoid:

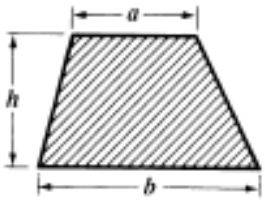

$$\text{Area} = A = \frac{(a+b)h}{2}$$

Note: In Britain, this figure is called a *trapezium* and the one below it is known as a *trapezoid*, the terms being reversed.

Example: Side $a = 23$ meters, side $b = 32$ meters, and height $h = 12$ meters. Find the area.

$$A = \frac{(a+b)h}{2} = \frac{(23+32)12}{2} = \frac{55 \times 12}{2} = 330 \text{ square meters}$$

Right-Angled Triangle:

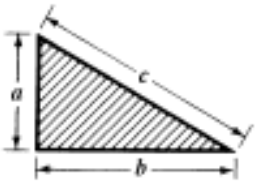

$$\text{Area} = A = \frac{ab}{2}$$
$$c = \sqrt{a^2 + b^2}$$
$$a = \sqrt{c^2 - b^2}$$
$$b = \sqrt{c^2 - a^2}$$

Acute-Angled Triangle:

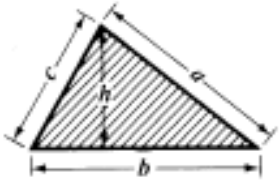

$$\text{Area} = A = \frac{bh}{2} = \frac{b}{2}\sqrt{a^2 - \left(\frac{a^2 + b^2 - c^2}{2b}\right)^2}$$

If $S = \tfrac{1}{2}(a + b + c)$, then

$$A = \sqrt{S(S-a)(S-b)(S-c)}$$

© Industrial Press. Adapted from “Technical Shop Mathematics, 3rd Edition” by its author, Thomas Achatz

Obtuse-Angled Triangle:

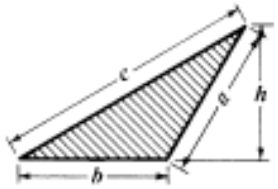

$$\text{Area} = A = \frac{bh}{2} = \frac{b}{2}\sqrt{a^2 - \left(\frac{c^2 - a^2 - b^2}{2b}\right)^2}$$

If $S = \frac{1}{2}(a + b + c)$, then

$$A = \sqrt{S(S-a)(S-b)(S-c)}$$

Circle:

$$\text{Area} = A = \pi r^2 = 3.1416r^2 = 0.7854d^2$$

$$\text{Circumference} = C = 2\pi r = 6.2832r = 3.1416d$$

$$r = C \div 6.2832 = \sqrt{A \div 3.1416} = 0.564\sqrt{A}$$

$$d = C \div 3.1416 = \sqrt{A \div 0.7854} = 1.128\sqrt{A}$$

Length of arc for center angle of $1° = 0.008727d$

Length of arc for center angle of $n° = 0.008727nd$

Solids

Cube:

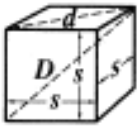

$$\text{Diagonal of cube face} = d = s\sqrt{2}$$

$$\text{Diagonal of cube} = D = \sqrt{\frac{3d^2}{2}} = s\sqrt{3} = 1.732s$$

$$\text{Volume} = V = s^3$$

$$s = \sqrt[3]{V}$$

Square Prism:

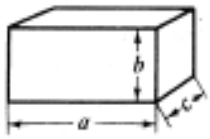

$$\text{Volume} = V = abc$$

$$a = \frac{V}{bc} \qquad b = \frac{V}{ac} \qquad c = \frac{V}{ab}$$

Prism:

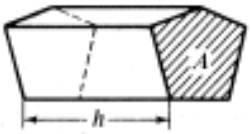

V = volume

A = area of end surface

$V = h \times A$

The area A of the end surface is found by the formulas for areas of plane figures on the preceding pages. Height h must be measured perpendicular to the end surface.

Pyramid:

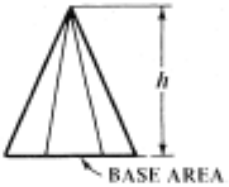

$$\text{Volume} = V = \tfrac{1}{3}h \times \text{area of base}$$

If the base is a regular polygon with n sides, and s = length of side, r = radius of inscribed circle, and R = radius of circumscribed circle, then:

$$V = \frac{nsrh}{6} = \frac{nsh}{6}\sqrt{R^2 - \frac{s^2}{4}}$$

© Industrial Press. Adapted from “Technical Shop Mathematics, 3rd Edition” by its author, Thomas Achatz

Cylinder:

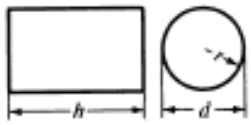

Volume $= V = 3.1416r^2h = 0.7854d^2h$

Area of cylindrical surface $= S = 6.2832rh = 3.1416dh$

Total area A of cylindrical surface and end surfaces:

$A = 6.2832r(r+h) = 3.1416d(\frac{1}{2}d+h)$

Cone:

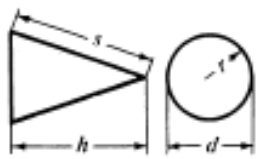

Volume $= V = \frac{3.1416r^2h}{3} = 1.0472r^2h = 0.2618d^2h$

Conical surface area $= A = 3.1416r\sqrt{r^2+h^2} = 3.1416rs$

$= 1.5708ds$

$s = \sqrt{r^2+h^2} = \sqrt{\frac{d^2}{4}+h^2}$

Sphere:

Volume $= V = \frac{4\pi r^3}{3} = \frac{\pi d^3}{6} = 4.1888r^3 = 0.5236d^3$

Surface area $= A = 4\pi r^2 = \pi d^2 = 12.5664r^2 = 3.1416d^2$

$r = \sqrt[3]{\frac{3V}{4\pi}} = 0.6204\sqrt[3]{V}$

U.S. Liquid Measure

1 U.S. gallon =

0.13368 cubic foot
231 cubic inches
128 U.S. fluid ounces
4 U.S. quarts
8 U.S. pints
0.8327 British Imperial gallon
3.785411784 liters

1 quart =

2 U.S. pints
8 U.S. gills
32 U.S. fluid ounces
57.75 cubic inches
0.9463529 liters

1 pint =

4 U.S. gills
16 U.S fluid ounces
28.875 cubic inches
473.176 milliliters

1 gill =

1/2 cup = **4** U.S. fluid ounces
7.21875 cubic inches
118.29 milliliters

1 board foot = 1 ft x 1 ft x 1 in

Quadratic formula: $x = \frac{-b\pm\sqrt{b^2-4ac}}{2a}$

© Industrial Press. Adapted from “Technical Shop Mathematics, 3rd Edition” by its author, Thomas Achatz

SkillsUSA
2015 Contest Projects

Residential Systems Installation and Maintenance

Click the “Print this Section” button above to automatically print the specifications for this contest. Make sure your printer is turned on before pressing the button.

HomeFusion Program Overview

HomeFusion Broadband is a new suite of 4G based products and services that will allow customers to have access to the internet using a fixed "wireless" solution. There are two primary components that enable the service.

1. The external HomeFusion Antenna (referred to as "**Antenna**" throughout this document) is to be mounted on the residential structure.
2. HomeFusion Broadband Router (referred to as "**Router**" throughout this document) receives its signal from the Antenna over a single RG-6 coaxial cable. This same cable will also power the Antenna via a power inserter. The Router will function as both a broadband modem as well as a wired and wireless Router.

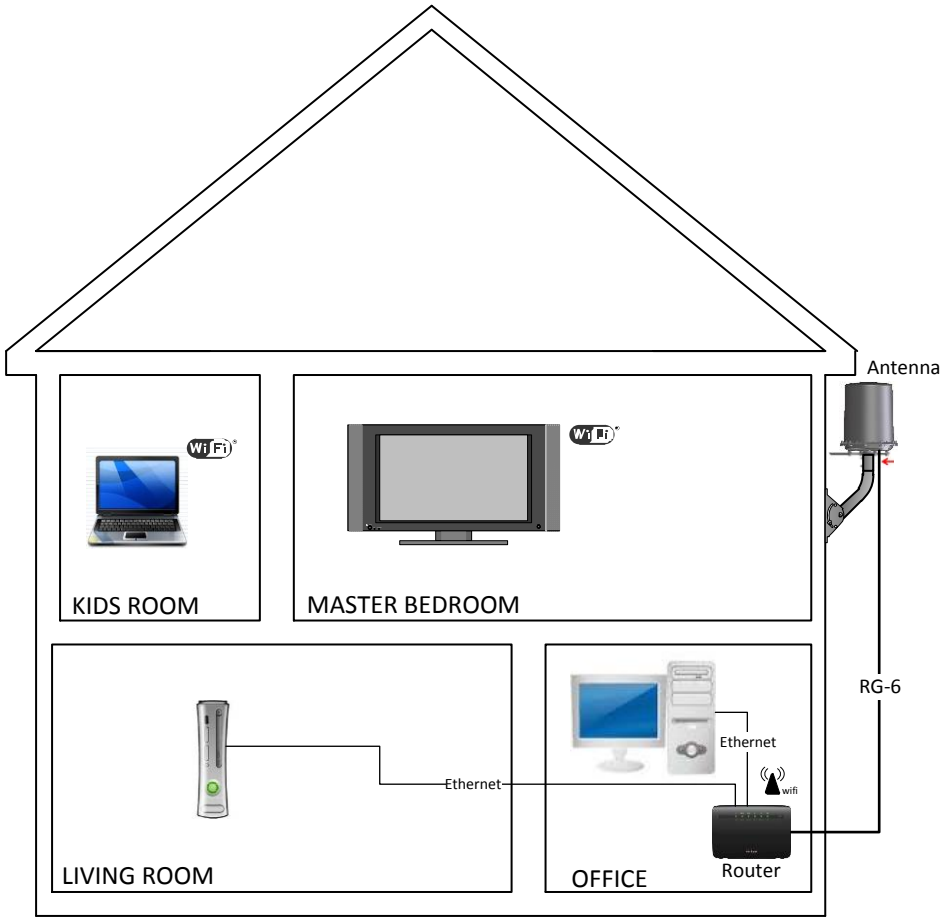

Proprietary & Highly Confidential Information – Unauthorized distribution of this material to any person not affiliated with NEWAsurion or its Authorized Installer Network may be considered a violation of the Service Agreement and may result in immediate termination from the program.

Network/Service Provider Overview

Technicians will be required to install and perform repairs (through replacement) to the HomeFusion product line. This will consist of NEWAsurion inventorying and shipping equipment to the installer network which NEWAsurion will manage to ensure installation or repair of equipment.

A set of equipment necessary to establish a working system includes an Antenna, Router, bracket, and power supply. The Router and power supply will be installed inside a customer's home. Installations will occur between 5-7 business days from order date at Verizon. Business days are defined as M-SAT excluding national holidays.

Installation Service:

1. Dispatch is sent to installer of installation
2. Installer receives product
3. Installer installs product and activates equipment with Verizon Wireless
4. Installer notifies NEW via service bench interface of equipment installed and any identified defective equipment

Repair Service

1. Customer calls Verizon Wireless to notify of failed equipment
2. Verizon Wireless triages and determines defective equipment and schedules repair for **next day**
3. Dispatch is sent to installer of repair
4. Existing equipment at installer will be used to replace defective equipment.
5. Installer replaces defective product
6. Installer notifies NEW via service bench interface of equipment installed
7. If needed, shipment is sent to installer to replace used stock / supply of repair

Branding & Badge Requirements

All approved and screened Technicians will be issued the following branded material:

1. Client Photo ID Badge
2. Client Branded Shirt
3. Client Branded Door Hangers

The shirt and badge must be worn and displayed in a professional manner at all times from the point of arrival to final departure. The door hanger should be placed on the front door in case the customer is not home.

Proprietary & Highly Confidential Information – Unauthorized distribution of this material to any person not affiliated with NEWAsurion or its Authorized Installer Network may be considered a violation of the Service Agreement and may result in immediate termination from the program.

Installation Instructions

HomeFusion Equipment Needed for Installation

HomeFusion Broadband Antenna	HomeFusion Broadband Router
 Width = 8”- Height = 10”- Weight = 4 lbs.	 **Router Box also includes** • Separate Power Supply • RJ11 cable • RJ45 cable (CAT5E)
Test Battery Power Supply	**21 VDC Power Inserter**
Pedestal Assembly & Mounting Plate	**Signal Test Tool (STT): LG Revolution 4G phone (un-activated)**

Proprietary & Highly Confidential Information – Unauthorized distribution of this material to any person not affiliated with NEWAsurion or its Authorized Installer Network may be considered a violation of the Service Agreement and may result in immediate termination from the program.

Antenna and Bracket Installation

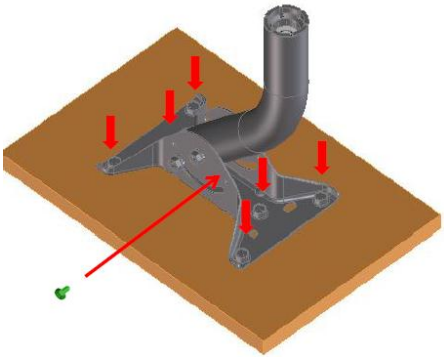

1. Determine stud centers using tape measure and or stud finder
2. Mark bolt holes using Pedestal holes
3. Pre Drill holes into wood studs before installation of lag bolts
4. Tighten the ground screw to the pedestal base plate to securely ground the wire later

   ** Use pitch patch or roof tar in drilled holes for roof mounts*
5. Insert 4 screws through Pedestal to the wall surface
6. A bubble level is located on the top of the pedestal assemble to assist with alignment
7. Using the bubble level, level the Pedestal, tighten nuts
8. Adjust the rotation angle of bracket versus the arm axially until the bubble level on the bracket is centered
9. Fully tighten the mast screws after confirming the mast angle

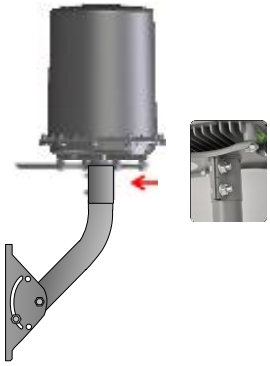

10. Remove the protective pulp and place the Antenna over the pedestal mount. Tighten the 2 screws on the mounting plate.
11. Tighten F-Connector of coaxial cable to Antenna
12. Secure Ground wire to ground screw on pedestal base plate

Cable Routing

Coax Cabling

- Run RG-6 cable w/17 AWG CCS attached ground wire from Antenna mounting location to ground bonding location. Use cable flex clips for all vertical and horizontal cable runs. Attach 17ga CCS ground wire to Antenna foot plate using a UL listed Green in color self-taping screw. Details on grounding can be found in section 6 of this guide.
- Mount Ground block (Ground block cannot be farther than 20ft from the ground bonding point or common house ground), Attach 17AWG CCS ground wire to ground block. Perform ground bonding – Note bonding must comply with NEC state and local codes. Attach 17AWG CCS ground wire to ground block.

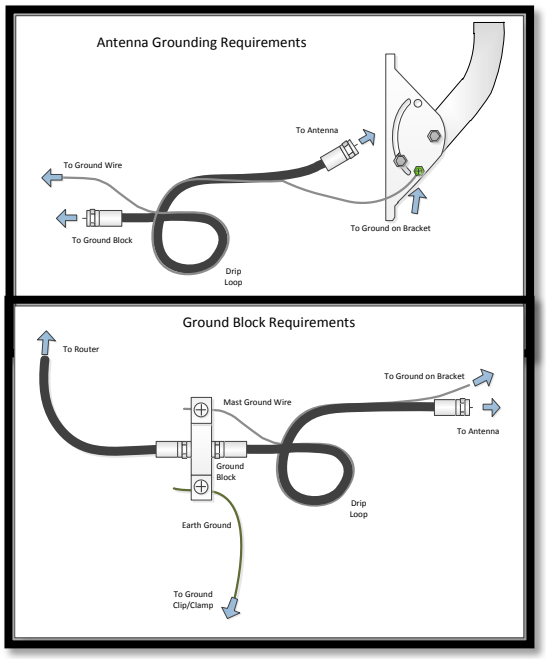

Proprietary & Highly Confidential Information – Unauthorized distribution of this material to any person not affiliated with NEWAsurion or its Authorized Installer Network may be considered a violation of the Service Agreement and may result in immediate termination from the program.

HomeFusion Broadband Router Installation

The Router will be pre-configured to operate with the HomeFusion Broadband network. Ask customer which PC / MAC they want connected and whether they want it connected via Wi-Fi or Ethernet cable.

If Wi-Fi, Complete Steps 1-5
If Ethernet, Complete Steps 1-6

- **Step 1 -** Connect coax cable from Power Inserter (Signal to Home) to Router (Coaxial WAN port)
- **Step 2 -** Connect coax cable from Power Inserter (Power to ODU) to Antenna power port (red). LED will initially turn red once communication is established, LED will turn green.
- **Step 3 -** Connect the Power Inserter to AC Outlet
- **Step 4 -** Connect the Router 12 VDC power supply to AC Outlet
- **Step 5 –** Turn Router power switch to "ON" position.
- **Step 6 -** Connect Router via Ethernet cable (port 1) into the Ethernet port on the computer.

Pay Rates for Installers

- Installation Pay Rate = $90
- Repair Pay Rate = $75
- Mileage Rate beyond 35 mile radius = $1 per mile
- Customer Same Day Cancellation = $50

Proprietary & Highly Confidential Information – Unauthorized distribution of this material to any person not affiliated with NEWAsurion or its Authorized Installer Network may be considered a violation of the Service Agreement and may result in immediate termination from the program.

Residential Systems Installation and Maintenance

Test consists of 100 questions. Timed test – 100 minutes allowed.
The questions come from seven main categories:

Category	# Questions	Weighting
1. Electronic Systems Technical Skills	17	17%
2. IP Networking `	25	25%
3. Audio / Video	20	20%
4. Home Theater	13	13%
5. Security and Access Control	7	7%
6. Integrated Control	12	12%
7. Troubleshooting	6	6%
TOTAL	**100**	**100%**

EST Skills

1. The device normally used at the point where the telephone or cable company's responsibility ends and the homeowner's responsibility begins is called _____.
   a. Demarc
   b. NIC
   c. DDI
   d. NIB

2. _____ is the technology infrastructure transmission standard in use today.
   a. POTS
   b. TCP/IP
   c. IP
   d. Windows RCP

3. When wiring a steel-framed building, use the cutouts in the metal framing material and use a _____ to protect the cable.
   a. grommet
   b. piece of PVC conduit
   c. nail guard
   d. warning tag

4. Ohm's law states the voltage in a circuit is equal to the current times the resistance.
   a. True
   b. False

5. To help protect against Electromagnetic Interference, EMI, use a cable with _____.
   a. shielding
   b. a large gauge
   c. solid conductors
   d. stranded conductors

6. Keypads should be mounted _____ inches AFF, Above Finished Floor.
   a. 24 to 36
   b. 12 to 24
   c. 48 to 52
   d. 72 to 84

7. When installing Cat-5e cable, the minimum bend radius to maintain is _____.
   a. 1/2 inch
   b. 1 inch
   c. 1½ inches
   d. 2 inches

8. To avoid EMI, place low voltage cables parallel to, and a minimum of _____ inches from electrical power cables, and preferably _____ inches.
   a. 2, 12
   b. 6, 12
   c. 12, 24
   d. 24, 36

9. When terminating Category 5e cable on a 66 block or 110 block, use _____ termination.
   a. IDC, Insulation Displacement Contact
   b. IDC, Installation Direct Contact
   c. RJ-45
   d. RJ-31

10. Every EST should consider industry certification to _____.
    a. offer verification of their skills
    b. differentiate their firm from the competition
    c. provide a value-added service to their firm
    d. all of the above

11. _____ occurs when two or more components have different ground connections and current flows on the shields between the equipment.
    a. ground leak
    b. ground loop
    c. crosstalk
    d. EMI

12. Damage to cables, or cables and connections exposed to water, may cause _____, resulting in noise entering the signal path, causing hiss, crosstalk and hum in audio, and flickering, hum bars and reduced output in video.
    a. EMI
    b. ground leak
    c. crosstalk
    d. RFI

13. When terminating UTP cable pairs, the maximum each pair can be untwisted is _____.
    a. None
    b. ½ inch
    c. 1 inch
    d. does not matter

14. All cables are marked with a designation suffix showing where the cable may be used. A cable marked with "P" is designed to be used in _____.
    a. general purpose settings
    b. risers or between floors
    c. commercial properties
    d. plenum spaces, above ceilings and below floors

15. The minimum bend radius for RG-6 coaxial cable is _____.
    a. 1 inch
    b. 2 inches
    c. 3 inches
    d. 4 inches

16. Signal performance over wire can be impacted by _____. (Select all that apply)
    a. Crosstalk
    b. Attenuation
    c. Resistance
    d. termination

17. To reduce interference within a Cat 5 twisted pair cable the pairs are all twisted in the same direction.
    a. True
    b. False

IP Networking

18. Electronic Static Discharge, ESD, is the _____.
    a. loss of a signal as it moves away from its source
    b. interference of a signal with other electronic devices, such as fluorescent lights
    c. deterioration of network signal due to static electricity in low humidity environments
    d. transfer of static electricity from you to components, potentially causing serious damage to equipment

19. The role of a switch on a home network is to _____.
    a. isolate the home network from the Internet
    b. allow the home network to connect to other home networks
    c. allow the home network to be viewed from the Internet
    d. provide the physical connection between the router and other network devices

20. The class of IP addresses called _____ has only 254 hosts per network and is used for most home networks.
    a. Class A
    b. Class B
    c. Class C
    d. Class D

21. A typical router has ____ IP address(es) and _____.
    a. One, is used to connect to the LAN
    b. One, is used to connect to the Internet
    c. Two, one is for the Web and one is for the Internet
    d. Two, one shows privately on the LAN and the other shows publicly on the Internet

22. To configure the router to only accept LAN traffic from the firewall, set up the router to _____.
    a. only accept traffic from the NetBIOS name of the firewall
    b. only accept traffic from the MAC address of the firewall
    c. physically connect to the firewall with a crossover cable
    d. none of the above

23. When creating a DHCP server in the router for a client's home network, use a private IP Address range. _____ is considered a private IP address range.
    a. 132.5.1.1-10
    b. 120.2.1.1-10
    c. 192.168.0.1-10
    d. 11.11.11.11-21

24. _____ is a valid IP address.
    a. google.com
    b. 198.2.64.12.3
    c. 192.259.0.1
    d. 192.168.0.2
    e. All of the above

25. A domain name server assigns a name to a MAC address.
    a. True
    b. False

26. The benefit(s) of NAT include _____.
    a. Enabling the use of more internal IP addresses
    b. Providing security by hiding internal IP addresses
    c. Allowing the entire home network to use only one external IP address
    d. A and B
    e. All of the above

27. The operating frequency of the IEEE 802.11b Wi-Fi version is _____.
    a. 100 MHz
    b. 600 MHz
    c. 900 MHz
    d. 1000 MHz
    e. 2.4 GHz

28. When wiring a network in a residence, follow the _____ wiring standard.
    a. POTS
    b. T568A
    c. T568B
    d. T568P

29. A computer in each bedroom, a printer in the home office, IP security cameras, and a media server in the living room can best be described as a:
    a. WAN
    b. LAN
    c. MAN
    d. None of the above

30. Use a _____ connector on a Cat 5e Ethernet network cable.
    a. RJ-11
    b. RJ-45
    c. XLR
    d. BNC

31. The color pairs in Cat 5e cable are_____, _____, _____ and _____.
    a. blue, red, yellow, green
    b. brown, green, orange, red
    c. green, orange, yellow, blue
    d. orange, brown, green, blue

32. A MAC address is the physical or hardware address of a network device and is assigned by the _____.
    a. manufacturer
    b. modem
    c. network device
    d. router

33. Port numbers are used to send and receive data. Web browsing uses port _____ and sending email uses port _____.
    a. 20, 80
    b. 25, 80
    c. 80, 20
    d. 80, 25

34. Use a _____ to protect against intruders external to the network.
    a. Firewall
    b. Proxy Server
    c. Switch
    d. MAC

35. Wireless signals from a WAP can be stopped from traveling outside the home by _____.
    a. distance configuration in WAP setup
    b. installing WAP reflectors around the outside of the home
    c. A and B
    d. None of the above

36. When connecting to a wireless network, the SSID is required. This is obtained by _____.
    a. entering the WEP key in the WAP
    b. entering the pass phrase in the WAP
    c. listening to the WAP broadcast
    d. request settings from the router

37. DNS (Domain Name Service) automatically assigns unique IP addresses to network devices when they are turned on and connected to a network.
    a. True
    b. False

38. The maximum length of a complete network segment built with 10BaseT Cat-5e cable should not exceed _____.
    a. 10 meters
    b. 85 meters
    c. 100 meters
    d. 100 feet
39. The assignment of IP addresses to devices is typically handled by the _____ process.
    a. DNS
    b. DHCP
    c. NAT
    d. MAC

40. When discussing networking technologies, the “10” in the term “10BaseT” stands for the _____.
    a. number of conductors used in the cable
    b. data rate in megabytes per second
    c. data rate in megabits per second
    d. diameter of the cable

41. The amount of time it takes a VoIP packet to reach its destination is known as _____.
    a. latency
    b. jitter specification
    c. codec
    d. QOS, Quality of Service

42. A three jack video system is commonly called _____ ?
    a. VGA video
    b. S-Video
    c. Composite Video
    d. Component Video

Audio / Video

43. A surround sound system with the following channels: Left, Center, Right, Subwoofer, Left-rear, and Right-rear, is called _____.
    a. Dolby Digital
    b. 5.1
    c. 6.0
    d. 6.1

44. The coaxial cables used for antennas and distributing video signals typically have _____ impedance.
    a. 53 ohms
    b. 300 ohms

c. 90 ohms
d. 75 ohms

45. When turning on the audio system the amplifier shuts down, this problem could be caused by _____.
a. an open wire to the speaker
b. a shorted speaker
c. the system is muted
d. a disconnected input

46. If one speaker is out of phase with the other, it will_____.
a. have no effect on the system or sound
b. damage the speaker(s)
c. damage the amplifier
d. work but will have no depth of field

47. If there are horizontal bars moving up or down through a monitor connected by composite video, most likely the video cable is _____.
a. shorted
b. too close to electrical wiring
c. too long
d. kink in it

48. Subwoofers are used to reproduce low frequency sound which is _____.
a. deep
b. non-directional
c. directional
d. sonic

49. In a multi-room audio system a 'zone' is an area or group of rooms that _____.
a. functions as an independent source of music
b. receives audio from the system
c. distributes video to the system
d. All of the above

50. Sound is measured in _____.
a. mL
b. Ω
c. dB
d. W

51. Amplifier power is expressed in watts, and the sound generated by speakers is measured in decibels (dB).
a. True
b. False

52. As the length of a wire run increases, _____ also increases.
a. Resistance
b. Wattage
c. Interference
d. frequency response

53. In a whole house audio system with four rooms of stereo speakers driven with only a single amplifier at the head-end _____ volume controls must be used.
    a. impedance matching
    b. standard
    c. non-impedance matching
    d. switching

54. If you measure the sound from a speaker to be 87dB at 50 Watts, to get 90dB from the speaker you will need _____ watts.
    a. 25
    b. 50
    c. 100
    d. 200

55. As resistance increases, impedance increases.
    a. True
    b. False

56. The standard screen aspect ratio for HDTV is _____.
    a. 4:3
    b. 1:1
    c. 16:9
    d. None of the above

57. Video displays using _____ scanning to 'paint' images on the screen can produce a better image than _____ scanning at the same resolution.
    a. SDTV, EDTV
    b. progressive, interlaced
    c. EDTV, HDTV
    d. interlace, progressive

58. Plasma displays typically offer a wider viewing angle than LCD displays.
    a. True
    b. False

59. A video output format that usually uses 3 RCA connectors is called _____ and is a(an) _____ signal.
    a. component, analog
    b. composite, analog
    c. s-video, analog
    d. component, digital

60. Digital video signals can be sent over _____ video outputs.
    a. composite
    b. component
    c. HDMI
    d. RGBHV

61. A 15 pin D-Sub connector is typically used to output _____ signals from computers to video displays.
    a. VGA
    b. HDMI

c. DVI
d. A and B

62. The most basic video signal is _____.
a. component video
b. S-VHS
c. DVI video
d. composite video

Home Theater

63. Which remote control technology does not require the remote to be pointed at the device it is operating?
a. Infrared
b. TCP/IP
c. RF
d. Both B and C above

64. The purpose of an Real Time Analyzer, RTA, is to:
a. Measure color temperature
b. Determine the distortion on an audio frequency
c. Determine loudness at specific frequencies
d. None of the above

65. IR Leakage occurs when:
a. IR wires are not insulated properly
b. Too much power is applied to the IR blaster
c. More than one component sees the IR blaster
d. An IR blaster is cracked

66. An SPL Meter would most likely be used during the _____ stage.
a. pre-wire
b. calibration
c. installation
d. trim-out

67. Video signals are many. The one to use for the best image is _____.
a. Component video
b. HDMI video
c. Composite video
d. S-Video

68. If the room has high ambient light you would NOT want to use _____.
a. rear projection
b. front projection
c. PDP direct view
d. LCD direct view

69. The “p” in 1080p stands for progressive scanning.
a. True
b. False

70. A UPS protects home theater components from _____.
    a. lightning strikes
    b. programming changes by the user
    c. memory loss during a power outage
    d. voltage spikes

71. The amount of wattage required for an amplifier in a home theater is a function of the _____.
    a. efficiency of the speakers
    b. distance from the speaker to the listener
    c. desired volume level at the listener
    d. all of the above

72. To deal with the heat generated by home theater equipment _____.
    a. use portable fans to circulate the room air
    b. turn off the equipment when not in use
    c. keep the room temperature low
    d. build in ventilation for the equipment

73. Video calibration typically covers
    a. contrast (white level) and brightness (black level)
    b. sharpness
    c. color hue, saturation and temperature
    d. all of the above

74. When aligning a projector, the _____ option will help make the image perfectly square.
    a. lens shift
    b. zoom
    c. keystone
    d. focus

75. To increase the volume by 3db you must _____ the wattage.
    a. double
    b. triple
    c. half
    d. none of the above

Security and Surveillance

76. A contact that has no continuity when not activated is said to be _____.
    a. normally closed (NC)
    b. normally open (NO)
    c. Defective
    d. An EOL device

77. Series wired contact sensors use _____ contacts.
    a. multiple
    b. normally closed
    c. normally open
    d. tripped

78. A security system uses a _____ jack to seize the phone line in an alarm situation.
    a. RJ-31X
    b. RG-31
    c. RJ-45
    d. RG-59

79. To maximize contrast, it is recommended to use a(an) _____ camera.
    a. Color
    b. Black and white
    c. Infrared
    d. UV

80. A camera that can only track horizontal movement is known as a _____ camera.
    a. IP
    b. PTZ
    c. Pan
    d. stationary

81. The minimum light level a camera can capture a clear image is expressed in the _____ rating in the camera specifications.
    a. watts
    b. lumens
    c. PTZ
    d. lux

82. I in areas where light is not sufficient for surveillance cameras, _____ are used.
    a. IR illuminators
    b. color cameras
    c. spot lights
    d. PTZ cameras

Integrated Control

83. A home control system uses Ethernet to communicate between the controller and 10 remote devices. To communicate to all remote devices, the controller must have _____ Ethernet ports.
    a. 1
    b. 2
    c. 3
    d. 5
    e. 10

84. The process of having a series of commands operate from a single button press is known as
    a. Auto program
    b. Scene
    c. Macro
    d. Step-by-step

85. The total wattage of all the devices connected to a lighting control device is typically known as the _____.
    a. total load
    b. lighting budget
    c. circuit size
    d. control current

86. A single HVAC system that uses two thermostats and maintains independent temperatures in two areas is called a _____ system.
    a. split
    b. two-zone
    c. dual-thermo
    d. duplex

87. HomePlug devices communicate using _____.
    a. power lines
    b. phone lines
    c. RF
    d. phono plugs

88. A homeowner is considering using Bluetooth-enabled devices for various functions. _____ is the maximum recommended distance for a Bluetooth device to communicate reliably.
    a. 12 feet
    b. 30 feet
    c. 75 feet
    d. 150 feet

89. In a home control system, use the_____ feature to turn lights on and off based on a specific time of day.
    a. solar motion sensor
    b. astronomical timer
    c. photo sensor
    d. clock timer

90. _____ is the best type of user interface for a home control system.
    a. Keypad
    b. Computer
    c. Remote control
    d. Let the homeowner decide

91. A lighting control system can control _____.
    a. individual lamps
    b. lighting scenes
    c. window treatments
    d. All of the above

92. An HVAC thermostat needs _____ volts traveling on the _____ color wire to operate.
    a. 24 , yellow
    b. 24 , red

c. 48 , yellow
d. 48 , red

93. Power surges can come from _____. *Select all that apply*
a. power fluctuations from the power company
b. high power use devices in the home
c. wireless transmitters
d. master controller

94. When power is lost, a(n) _____ is used to keep constant power for critical equipment.
a. HVAC
b. UPS
c. KSU
d. PTZ

Troubleshooting Methodology and Documentation

95. An Uninterruptible Power Supply _____.
a. switches from AC to battery power when it detects an AC power line fault
b. provides AC power through an inverter, powered by batteries, that are charged from the AC line
c. switches to an alternate AC power circuit when it detects a disturbance on the current AC power circuit
d. Starts an AC power generator when it detects an AC power line fault

96. OSHA is an acronym for _____.
a. Organization for Safe Home Appliances
b. Occupational Safety and Health Administration
c. Organization of Shared Home Appliances
d. Organization for Safety in Home Applications

97. NEC is an acronym for _____.
a. National Electrical Code
b. Nominal Electrical Current
c. National Electronics Certification
d. Network Enhanced Channel
e. Normally Exposed Conductor

98. MSDS is an acronym for _____.
a. Material Safety Data Sheet
b. Manufacturers Summary of Data Speeds
c. Manufacturers Supply Depot Summary
d. Massively Serial Data Stream

99. A surge from a lightning strike can enter a home through _____.
a. cable service feed
b. electrical service feed
c. outdoor speakers
d. All of the above

100. If two computers both have the same IP address, they will_____.
    a. be able to communicate with each other
    b. not be able to communicate with each other
    c. communicate with each other but not the Internet
    d. None of the above

Pass/Fail message

You have now completed the SkillsUSA Residential Systems and Maintenance Test.

Instructions

You will have 90 minutes to complete this test.
The Test consists of 100 questions.
You must answer a question to move on the the next question.
GOOD LUCK!

EST Skills

1. The device normally used at the point where the telephone or cable company's responsibility ends and the homeowner's responsibility begins is called _____.
    a. Demarc
    b. NIC
    c. DDI
    d. NIB

2. _____ is the technology infrastructure transmission standard in use today.
    a. POTS
    b. TCP/IP
    c. IP
    d. Windows RCP

3. When wiring a steel-framed building, use the cutouts in the metal framing material and use a _____ to protect the cable.
    a. grommet
    b. piece of PVC conduit
    c. nail guard
    d. warning tag

4. Ohm's law states the voltage in a circuit is equal to the current times the resistance.
    a. True
    b. False

5. To help protect against Electromagnetic Interference, EMI, use a cable with _____.
    a. shielding
    b. a large gauge
    c. solid conductors
    d. stranded conductors

6. Keypads should be mounted _____ inches AFF, Above Finished Floor.
    a. 24 to 36
    b. 12 to 24
    c. 48 to 52
    d. 72 to 84

7. When installing Cat-5e cable, the minimum bend radius to maintain is _____.

a. 1/2 inch
b. 1 inch
c. 1½ inches
d. 2 inches

8. To avoid EMI, place low voltage cables parallel to, and a minimum of _____ inches from electrical power cables, and preferably _____ inches.

a. 2, 12
b. 6, 12
c. 12, 24
d. 24, 36

9. When terminating Category 5e cable on a 66 block or 110 block, use _____ termination.

a. IDC, Insulation Displacement Contact
b. IDC, Installation Direct Contact
c. RJ-45
d. RJ-31

10. Every EST should consider industry certification to _____.

a. offer verification of their skills
b. differentiate their firm from the competition
c. provide a value-added service to their firm
d. all of the above

11. _____ occurs when two or more components have different ground connections and current flows on the shields between the equipment.

a. ground leak
b. ground loop
c. crosstalk
d. EMI

12. Damage to cables, or cables and connections exposed to water, may cause _____, resulting in noise entering the signal path, causing hiss, crosstalk and hum in audio, and flickering, hum bars and reduced output in video.

a. EMI
b. ground leak
c. crosstalk
d. RFI

13. When terminating UTP cable pairs, the maximum each pair can be untwisted is _____.

a. None
b. ½ inch
c. 1 inch
d. does not matter

14. All cables are marked with a designation suffix showing where the cable may be used. A cable marked with “P” is designed to be used in _____.

a. general purpose settings
b. risers or between floors
c. commercial properties
d. plenum spaces, above ceilings and below floors

15. The minimum bend radius for RG-6 coaxial cable is _____.

a. 1 inch
b. 2 inches
c. 3 inches
d. 4 inches

16. Signal performance over wire can be impacted by _____. (Select all that apply)

a. Crosstalk
b. Attenuation
c. Resistance
d. termination

17. To reduce interference within a Cat 5 twisted pair cable the pairs are all twisted in the same direction.

a. True
b. False

IP Networking

18. Electronic Static Discharge, ESD, is the _____.

a. loss of a signal as it moves away from its source
b. interference of a signal with other electronic devices, such as fluorescent lights
c. deterioration of network signal due to static electricity in low humidity environments
d. transfer of static electricity from you to components, potentially causing serious damage to equipment

19. The role of a switch on a home network is to _____.

a. isolate the home network from the Internet
b. allow the home network to connect to other home networks
c. allow the home network to be viewed from the Internet
d. provide the physical connection between the router and other network devices

20. The class of IP addresses called _____ has only 254 hosts per network and is used for most home networks.

a. Class A
b. Class B
c. Class C
d. Class D

21. A typical router has ____ IP address(es) and _____.

a. One, is used to connect to the LAN
b. One, is used to connect to the Internet
c. Two, one is for the Web and one is for the Internet
d. Two, one shows privately on the LAN and the other shows publicly on the Internet

22. To configure the router to only accept LAN traffic from the firewall, set up the router to _____.

a. only accept traffic from the NetBIOS name of the firewall
b. only accept traffic from the MAC address of the firewall
c. physically connect to the firewall with a crossover cable
d. none of the above

23. When creating a DHCP server in the router for a client's home network, use a private IP Address range. _____ is considered a private IP address range.

a. 132.5.1.1-10
b. 120.2.1.1-10
c. 192.168.0.1-10
d. 11.11.11.11-21

24. _____ is a valid IP address.

a. google.com
b. 198.2.64.12.3
c. 192.259.0.1
d. 192.168.0.2
e. All of the above

25. A domain name server assigns a name to a MAC address.

a. True
b. False

26. The benefit(s) of NAT include _____.

a. Enabling the use of more internal IP addresses
b. Providing security by hiding internal IP addresses
c. Allowing the entire home network to use only one external IP address
d. A and B
e. All of the above

27. The operating frequency of the IEEE 802.11b Wi-Fi version is _____.

a. 100 MHz
b. 600 MHz
c. 900 MHz
d. 1000 MHz
e. 2.4 GHz

28. When wiring a network in a residence, follow the _____ wiring standard.

a. POTS
b. T568A
c. T568B
d. T568P

29. A computer in each bedroom, a printer in the home office, IP security cameras, and a media server in the living room can best be described as a:

a. WAN
b. LAN
c. MAN
d. None of the above

30. Use a _____ connector on a Cat 5e Ethernet network cable.

a. RJ-11
b. RJ-45
c. XLR
d. BNC

31. The color pairs in Cat 5e cable are_____, _____, _____ and _____.

a. blue, red, yellow, green
b. brown, green, orange, red
c. green, orange, yellow, blue
d. orange, brown, green, blue

32. A MAC address is the physical or hardware address of a network device and is assigned by the _____.

a. manufacturer
b. modem
c. network device
d. router

33. Port numbers are used to send and receive data. Web browsing uses port _____ and sending email uses port _____.

a. 20, 80
b. 25, 80
c. 80, 20
d. 80, 25

34. Use a _____ to protect against intruders external to the network.

a. Firewall
b. Proxy Server
c. Switch
d. MAC

35. Wireless signals from a WAP can be stopped from traveling outside the home by _____.

a. distance configuration in WAP setup
b. installing WAP reflectors around the outside of the home
c. A and B
d. None of the above

36. When connecting to a wireless network, the SSID is required. This is obtained by _____.

a. entering the WEP key in the WAP
b. entering the pass phrase in the WAP
c. listening to the WAP broadcast
d. request settings from the router

37. DNS (Domain Name Service) automatically assigns unique IP addresses to network devices when they are turned on and connected to a network.

a. True
b. False

38. The maximum length of a complete network segment built with 10BaseT Cat-5e cable should not exceed _____.

a. 10 meters
b. 85 meters
c. 100 meters
d. 100 feet

39. The assignment of IP addresses to devices is typically handled by the _____ process.

a. DNS
b. DHCP
c. NAT
d. MAC

40. When discussing networking technologies, the “10” in the term “10BaseT” stands for the _____.

a. number of conductors used in the cable
b. data rate in megabytes per second
c. data rate in megabits per second
d. diameter of the cable

41. The amount of time it takes a VoIP packet to reach its destination is known as _____.

a. latency
b. jitter specification
c. codec
d. QOS, Quality of Service

42. A three jack video system is commonly called _____ ?

a. VGA video
b. S-Video
c. Composite Video
d. Component Video

Audio / Video

43. A surround sound system with the following channels: Left, Center, Right, Subwoofer, Left-rear, and Right-rear, is called _____.

a. Dolby Digital
b. 5.1
c. 6.0
d. 6.1

44. The coaxial cables used for antennas and distributing video signals typically have _____ impedance.

a. 53 ohms
b. 300 ohms
c. 90 ohms
d. 75 ohms

45. When turning on the audio system the amplifier shuts down, this problem could be caused by _____.

a. an open wire to the speaker
b. a shorted speaker
c. the system is muted
d. a disconnected input

46. If one speaker is out of phase with the other, it will_____.

a. have no effect on the system or sound
b. damage the speaker(s)
c. damage the amplifier
d. work but will have no depth of field

47. If there are horizontal bars moving up or down through a monitor connected by composite video, most likely the video cable is _____.

a. shorted
b. too close to electrical wiring
c. too long
d. kink in it

48. Subwoofers are used to reproduce low frequency sound which is _____.

a. deep
b. non-directional
c. directional
d. sonic

49. In a multi-room audio system a 'zone' is an area or group of rooms that _____.

a. functions as an independent source of music
b. receives audio from the system
c. distributes video to the system
d. All of the above

50. Sound is measured in _____.

a. mL
b. Ω
c. dB
d. W

51. Amplifier power is expressed in watts, and the sound generated by speakers is measured in decibels (dB).

a. True
b. False

52. As the length of a wire run increases, _____ also increases.

a. Resistance
b. Wattage
c. Interference
d. frequency response

53. In a whole house audio system with four rooms of stereo speakers driven with only a single amplifier at the head-end _____ volume controls must be used.

a. impedance matching
b. standard
c. non-impedance matching
d. switching

54. If you measure the sound from a speaker to be 87dB at 50 Watts, to get 90dB from the speaker you will need _____ watts.

a. 25
b. 50
c. 100
d. 200

55. As resistance increases, impedance increases.

a. True
b. False

56. The standard screen aspect ratio for HDTV is _____.

a. 4:3
b. 1:1
c. 16:9
d. None of the above

57. Video displays using _____ scanning to 'paint' images on the screen can produce a better image than _____ scanning at the same resolution.

a. SDTV, EDTV
b. progressive, interlaced
c. EDTV, HDTV
d. interlace, progressive

58. Plasma displays typically offer a wider viewing angle than LCD displays.

a. True
b. False

59. A video output format that usually uses 3 RCA connectors is called _____ and is a(an) _____ signal.

a. component, analog
b. composite, analog
c. s-video, analog
d. component, digital

60. Digital video signals can be sent over _____ video outputs.

a. composite
b. component
c. HDMI
d. RGBHV

61. A 15 pin D-Sub connector is typically used to output _____ signals from computers to video displays.

a. VGA
b. HDMI
c. DVI
d. A and B

62. The most basic video signal is _____.

a. component video
b. S-VHS
c. DVI video
d. composite video

Home Theater

63. Which remote control technology does not require the remote to be pointed at the device it is operating?
    a. Infrared
    b. TCP/IP
    c. RF
    d. Both B and C above

64. The purpose of an Real Time Analyzer, RTA, is to:
    a. Measure color temperature
    b. Determine the distortion on an audio frequency
    c. Determine loudness at specific frequencies
    d. None of the above

65. IR Leakage occurs when:
    a. IR wires are not insulated properly
    b. Too much power is applied to the IR blaster
    c. More than one component sees the IR blaster
    d. An IR blaster is cracked

66. An SPL Meter would most likely be used during the _____ stage.
    a. pre-wire
    b. calibration
    c. installation
    d. trim-out

67. Video signals are many. The one to use for the best image is _____.
    a. Component video
    b. HDMI video
    c. Composite video
    d. S-Video

68. If the room has high ambient light you would NOT want to use _____.
    a. rear projection
    b. front projection
    c. PDP direct view
    d. LCD direct view

69. The “p” in 1080p stands for progressive scanning.
    a. True
    b. False

70. A UPS protects home theater components from _____.
    a. lightning strikes
    b. programming changes by the user
    c. memory loss during a power outage
    d. voltage spikes

71. The amount of wattage required for an amplifier in a home theater is a function of the _____.
    a. efficiency of the speakers
    b. distance from the speaker to the listener
    c. desired volume level at the listener
    d. all of the above

72. To deal with the heat generated by home theater equipment _____.
    a. use portable fans to circulate the room air
    b. turn off the equipment when not in use
    c. keep the room temperature low
    d. build in ventilation for the equipment

73. Video calibration typically covers
    a. contrast (white level) and brightness (black level)
    b. sharpness
    c. color hue, saturation and temperature
    d. all of the above

74. When aligning a projector, the _____ option will help make the image perfectly square.
    a. lens shift
    b. zoom
    c. keystone
    d. focus

75. To increase the volume by 3db you must _____ the wattage.
    a. double
    b. triple
    c. half
    d. none of the above

Security and Surveillance

76. A contact that has no continuity when not activated is said to be _____.
    a. normally closed (NC)
    b. normally open (NO)
    c. Defective
    d. An EOL device

77. Series wired contact sensors use _____ contacts.
    a. multiple
    b. normally closed
    c. normally open
    d. tripped

78. A security system uses a _____ jack to seize the phone line in an alarm situation.
    a. RJ-31X
    b. RG-31
    c. RJ-45
    d. RG-59

79. To maximize contrast, it is recommended to use a(an) _____ camera.
    a. Color
    b. Black and white
    c. Infrared
    d. UV

80. A camera that can only track horizontal movement is known as a _____ camera.
    a. IP
    b. PTZ
    c. Pan
    d. stationary

81. The minimum light level a camera can capture a clear image is expressed in the _____ rating in the camera specifications.
    a. watts
    b. lumens
    c. PTZ
    d. lux

82. I in areas where light is not sufficient for surveillance cameras, _____ are used.

a. IR illuminators
b. color cameras
c. spot lights
d. PTZ cameras

Integrated Control

83. A home control system uses Ethernet to communicate between the controller and 10 remote devices. To communicate to all remote devices, the controller must have _____ Ethernet ports.

a. 1
b. 2
c. 3
d. 5
e. 10

84. The process of having a series of commands operate from a single button press is known as

a. Auto program
b. Scene
c. Macro
d. Step-by-step

85. The total wattage of all the devices connected to a lighting control device is typically known as the _____.

a. total load
b. lighting budget
c. circuit size
d. control current

86. A single HVAC system that uses two thermostats and maintains independent temperatures in two areas is called a _____ system.

a. split
b. two-zone
c. dual-thermo
d. duplex

87. HomePlug devices communicate using _____.

a. power lines
b. phone lines
c. RF
d. phono plugs

88. A homeowner is considering using Bluetooth-enabled devices for various functions. _____ is the maximum recommended distance for a Bluetooth device to communicate reliably.

a. 12 feet
b. 30 feet
c. 75 feet
d. 150 feet

89. In a home control system, use the_____ feature to turn lights on and off based on a specific time of day.

a. solar motion sensor
b. astronomical timer
c. photo sensor
d. clock timer

90. _____ is the best type of user interface for a home control system.

a. Keypad
b. Computer
c. Remote control
d. Let the homeowner decide

91. A lighting control system can control _____.

a. individual lamps
b. lighting scenes
c. window treatments
d. All of the above

92. An HVAC thermostat needs _____ volts traveling on the _____ color wire to operate.

a. 24 , yellow
b. 24 , red
c. 48 , yellow
d. 48 , red

93. Power surges can come from _____. Select all that apply

a. power fluctuations from the power company
b. high power use devices in the home
c. wireless transmitters
d. master controller

94. When power is lost, a(n) _____ is used to keep constant power for critical equipment.

a. HVAC
b. UPS
c. KSU
d. PTZ

Troubleshooting Methodology and Documentation

95. An Uninterruptible Power Supply _____.

a. switches from AC to battery power when it detects an AC power line fault
b. provides AC power through an inverter, powered by batteries, that are charged from the AC line
c. switches to an alternate AC power circuit when it detects a disturbance on the current AC power circuit
d. Starts an AC power generator when it detects an AC power line fault

96. OSHA is an acronym for _____.

a. Organization for Safe Home Appliances
b. Occupational Safety and Health Administration
c. Organization of Shared Home Appliances
d. Organization for Safety in Home Applications

97. NEC is an acronym for _____.

a. National Electrical Code
b. Nominal Electrical Current
c. National Electronics Certification
d. Network Enhanced Channel
e. Normally Exposed Conductor

98. MSDS is an acronym for _____.

a. Material Safety Data Sheet
b. Manufacturers Summary of Data Speeds
c. Manufacturers Supply Depot Summary
d. Massively Serial Data Stream

99. A surge from a lightning strike can enter a home through _____.

a. cable service feed
b. electrical service feed
c. outdoor speakers
d. All of the above

100. If two computers both have the same IP address, they will_____.

a. be able to communicate with each other
b. not be able to communicate with each other
c. communicate with each other but not the Internet
d. None of the above

SkillsUSA
2015 Contest Projects

Robotics and Automation Technology

Click the “Print this Section” button above to automatically print the specifications for this contest. Make sure your printer is turned on before pressing the button.

TEAM # _____

2015 SKILLS USA CHAMPIONSHIP

ROBOTICS AND AUTOMATION TECHNOLOGY

Robotics and Automation Technology
Challenges two-person teams to demonstrate operation of a five-axis servo-robot along with a set of sensors and motorized devices to resolve a simulated production process problem. Teams set up and demonstrate operation of a robotic workcell from a word problem. Contestants are required to create a flow chart and sequence of operation. Teams are also judged on efficiency, speed and teamwork.

Revised 05-05-15

TEAM GUIDE

Contents

1. Robotics & Automation Competition

Acknowledgments i
Technical Committee ii
Educational Committee iii
Judges iv
1: Contest Overview 1
2. Contest Guidelines 2
3: Official Competition Overview 3
3.1: Purpose 3
3.2: Clothing Requirement 3
3.3: Eligibility 3
3.4: Scope of Contest 4
3.5: Group Organizational Goal 5
3.6: General Information 5
3.7: Team Goals 5
3.8: Contest Notebook 5
3.9: Required Equipment, Tools & Materials 6
3.10: Division of Duties 7
4: Safety 8

2. Practice Session

Practice Session Briefing 1
Instructions for Robot Setup 2
Setup and Practice 3
Setup and Practice 3

3. Competition

5: Competition Introduction 1
6: Task One 3
7: Task Two 5

4. Hardware Specifications

8: Controller Interface 1
9: Programmable Logic Controller 2
Stack Light Specifications 6
11: Power Supply 7
12: Sensor Box 8
13: Photo Sensor 9
14: Pneumatic Parts Feeder and Pneumatic Press with Sensors 10
15: Flow Chart 12
16: Print to Screen 13
17: Conveyor Control 14

5. Required Documentation

Safety Issues 1
Flow Chart 2
System Hardware Layout 3
Controller Interface - Input Assignments 4
Controller Interface - Output Assignments 5
PLC Interfact – Input and Output Assignments 6
Terminal Strip Assignments 7

Acknowledgments

The success of this competition will be the motivation of the contestants and their instructors, the determined efforts of the National and State Technical Committees, and the generosity of the companies donating equipment, time and material.

The following are contributors to the 2011 Skills USA Championships, Robotics and Automation Technology competition:

Intelitek, Inc.
444 East Industrial Park Drive
Manchester, NH 03109

CNC Software
2909 71st Ave. N.W.
Gig Harbor, WA 98335

SolidWorks Corporation
300 Baker Avenue
Concord, MA 01742

National Tooling & Manufacturing Assoc.
9300 Livingston Road
Ft. Washington, MD 20744

AutoDesk, Inc.
111 McInnis Parkway
San Rafael, California 94903

Technical Committee

The following individuals contributed their time and energy to the Technical Committee.

Bryant Abbott
Committee Co-Chair
Intelitek
444 East Industrial Park Drive
Manchester, NH 03109

Amir Pratt
Committee Co-Chair
Intelitek
444 East Industrial Park Drive
Manchester, NH 03109

Educational Committee

The following individuals contributed their time and energy to the Educational Committee.

Judges

The following individuals contributed their time and energy as Judges for the competition.

Amy Caudill

Wayne A. Ellington
CMRP
Reliability Centered Maintenance
Nissan North America
Smyrna, TN

1: Contest Overview

1.1: Introduction

This document describes the Skills USA Championship 2015 Robotics and Automation Technology Competition and includes all related paperwork. This document may be used as a blueprint for state, regional, or local competitions.

1.2: Cutting-edge Technology

Robotics and Automation encompass a large part of manufacturing technologies. The integration of these processes within the manufacturing industry has allowed the United States to remain competitive within today's global market. Installing new, up-to-date systems in a timely manner is highly beneficial to remain competitive in the industrial market. The ability to change an existing system to a more efficient operation saves time in bringing a new product to market and reduces production time, thus lowering production costs.

To maintain industry leadership in this evolving field, it is essential that the labor force remain at the forefront of both current and emerging technologies in design and manufacturing. With today's complex manufacturing challenges, no individual can be expected to be an expert in all areas, so it is imperative for manufacturers to combine the resources and abilities of a team to resolve problems.

1.3: Your Team

Workers in the field of Robotics and Automation often find success in using a team approach. In the interest of emulating industry, this competition will be structured in this manner. For optimum team efficiency, we suggest your team be comprised of one specialist in each of the following fields:

- Robot Programming
- Electro-mechanical Integration

1.4: Statement of the Problem

Your company, Robotics and Automation Inc., has assigned you and your teammate to compete for a lucrative contract designing new production lines for SCORBOT Robotics, Inc. The engineering department has provided you with a description of the required process and a list of equipment and material available for use in system design and implement. **Your assigned team number will be you team name**.

Quality and production costs are essential in remaining competitive in the manufacturing industry. Therefore, project completeness, elapsed time off-line, cycle time, and implementation techniques will all be considered as part of your evaluation.

2.: Contest Guidelines

2.1.: Implementation

Using the description of the process and the provided equipment and materials, you must layout your production system and develop a robot program to fulfill the requirement of the task. Complete project documentation at each task level is required. Documentation must include: a sketch of the layout and equipment placement, a flow chart of the program, terminal strip assignments and Input/Output assignments.

2.2.: Task Level Update Requirements

This project is broken into multiple "Tasks"; each requiring program and layout updates. Documentation for each section must also reflect your team's proposal for the current assigned task.

2.3.: Guidelines

The project manager has provided the base outline of the materials within this document to begin your planning and implementation. Your success on this project is based upon the following criteria:

A. Providing complete documentation of the project at each task level*.
   1. Flow chart
   2. System hardware layout
   3. Controller interface - input and output assignments
   4. Terminal strip assignment

B. Using the proper technology for the preparation of the documentation
C. Packaging the documentation in an orderly and professional manner
D. Effective use of teamwork in managing the project
E. Safety in the manufacturing process
F. Efficient use of time, material and resources

* Documentation at each task level should be presented for <u>just the requirements</u> of that task level assignment.

2.4: Team Guidelines

Your team should follow these guidelines:

1. Primary responsibilities and duties are organized.
2. A team leader is identified to interact with Technical Committee representatives.
3. Your team decides upon appropriate break times with the exception of the mandatory lunch break.
4. Breaks are to be taken within assigned individual work areas.
5. Team members must be escorted by a member of the SkillsUSA Courtesy Corp. or by a contest judge when taking a bathroom break. Only one team member is allowed to leave the contest area at a time.
6. SCORBASE software for the SCORBOT ER-4u has been provided to you and is loaded on the provided computer.
7. Save your program/work often. You must save your final programs.
8. You will be notified of your contest final completion time. Only a stopped clock as referenced in section 2.5 will allow additional time.

2.5: Equipment Malfunctions Considerations

IN THE CASE OF A SOFTWARE OR HARDWARE FAILURE: Your team must notify a contest judge or member of the Technical Committee of any suspected hardware or software malfunction. If it is determined that it is in fact a software or hardware failure, the running time clock will be stopped for that team until the malfunction is corrected. System "down-time" will be added to the effected team's contest end time so that all team's have the same total contest duration. In the

case of a stopped time clock, all work will stop for the entire team until the problem is resolved. It is important to notify a contest judge as soon as a malfunction is suspected. No extra time allowance will be granted for malfunctions prior to notifying a judge.

3: Official Competition Overview

3.1: General Information

This is an official SkillsUSA Championship sanctioned competition. This competition is unique due to its dual technology, team-oriented concept and intensive use of hardware and software.

3.1: Purpose

3.1.1: Goals of the Competition

To evaluate each contestant's preparation for employment in the emerging arenas of robotics and automation team approach to problem solving in the work environment. To recognize outstanding students for excellence and professionalism in their chosen field.

3.2: Clothing Requirement

3.2.1: Correct Attire

- official khaki work shirt
- official khaki work pants
- approved leather work shoes
- CLEAR safety glasses with side shields or goggles (prescription glasses must be covered with goggles unless they are equipped with side shields)

Refer to General Regulations and Robotics and Automation Technology, Page of the current SkillsUSA Championships Technical Standards.

3.3: Eligibility

3.3.1: Qualifications

This competition is open to active SkillsUSA members enrolled in programs with robotics, electro-mechanical, or automated manufacturing as their occupational objective.

3.4: Scope of Contest

3.4.1: Team Organization

Teams of two will demonstrate their ability to perform, exhibit, and compile skills and knowledge necessary from the following list of competencies determined by the Robotics and Automation Technology Skills USA Technical Committee Members.

The team will be provided with a written description of the task requirements and a list of the available equipment and materials. The team will develop a system design and robot program proposal, and upon the judge's approval will configure and demonstrate their product. Upon successful completion of each task level, they will be provided a requirement to refine their system design and again demonstrate the reconfigured system's functionality.

3.4.2: Required Competencies

Successful competitors possess the following skills:

A. Perform analysis of task
1. Evaluate written task
2. Evaluate provided equipment and material
3. Evaluate system task revisions

B. Design, Sketch and Plan
1. Determine sequence of operation
2. Select equipment and material to meet functional need
3. Create Flow Chart
4. Create layout
5. Create Input and Output Assignment
6. Create Terminal Strip Assignment
7. Process system revisions for different task levels

C. Implement Design
1. Develop robot program
2. Install equipment
3. Integrate equipment with system controller
4. Modify system to meet task revision requirements

D. System Performance
1. Perform functional test for total system operation
2. Present system for evaluation
3. Perform functional test to meet stated task requirements
4. Present revised system for evaluation

3.5: Group Organizational Goal

3.5.1: Team Dynamics

The competition is run much like you would expect in industry; with both team members interacting and demonstrating good teamwork to achieve the team's task assignments. The robot programmer will program the robot and peripheral equipment. The Electro-mechanical integrator will install the peripheral equipment and integrate it into the system.

The contest is designed to promote creativity in organization of production responsibility. Teams should divide duties among all team members. **Each team member must take an active role in this competition.** No one individual should dominate by taking responsibility for more than one project specialty. When a team member has spare time, they will help their teammates. All Team members are responsible for double-checking each other's work and quality control.

3.6: General Information

3.6.1: Necessities

The following items are required to compete in this contest:

1. This competition will be carried out using Intelitek's ER4u robot, linear slide base, conveyor, and teach pendent.
2. SEIMANS PLC (pre-programmed)
3. Other equipment and material is from local supply sources.
4. Each team will be provided with one computer unless otherwise notified previous to competition.
5. Teams will consist of two members.

3.7: Team Goals

2.7.1: Team Objectives

1. To have every team complete the competition.
2. To have each team member demonstrate reading and writing skills.
3. To have each team member use their critical thinking and problem solving abilities in the contest.
4. To have each team member illustrate responsibility, teamwork, self-management skills, and professionalism.

3.8: Contest Notebook

3.8.1: Supplied Documentation

Each team is issued this notebook and information packet. The contents of the supplied documentation completely define the requirements of the contest and include templates for the required project documentation. Additional copies of the templates may be requested from the contest judges.

3.9: Required Equipment, Tools, & Materials

Teams require the following materials to complete the competition. The Technical Committee provides many of these materials, but the teams must also bring certain items.

3.9.1: Workstation Components Provided by the Technical Committee:

1. SCORBOT ER-4u robot mounted on a linear slide base
2. Teach Pendant
3. Conveyor with a Photo sensor
4. Pneumatic press with position sensors
5. Pneumatic parts feeder
6. Sensor Box with a Micro switch and a Proximity sensor
7. Mounting platforms
8. Plastic and Metal blocks
9. Computer at each station with SCORBASE software installed
10. Printer
11. Contest Notebooks
12. Task assignments (in contest notebook)
13. AC Power at each station
14. Air for pneumatic equipment at each station
15. Siemens S7-1200 PLC

3.9.2: Team Provided Components

Teams Provide (tool boxes will be inspected):

1. Wire cutters/diagonals 3” to 6”
2. Wire strippers
3. Long nose/needle nose pliers 3” to 6”
4. Screwdrivers (3” to 6” blade length)
   - Common Set to include 1/8”, 1/4” & 3/8” minimum
   - Phillips Set to include # 0, # 1 & # 2 minimum
5. Standard Safety glasses, clear lens only, for each constant
   - Colorized Lenses are not accepted
   - Sun Glasses are not accepted
6. Pencils 2 (sharpened)
7. 6” or 12” ruler
8. Hookup wire is required, 20 – 24 AWG,
   - 5 different wire colors
   - Recommend 150’ of each color

NOTE:

- Points will be deducted for items listed and not provided by the team.
- You will not be permitted to borrow from other contestants
- SkillsUSA Clothing – See the SkillsUSA - Technical Standards for specific information

3.9.3: Team Provided Components - Optional items:

Teams may also provide:

1. Intelitek Documentation: This documentation can be downloaded and brought to the contest by each team. The Technical Committee will not be providing a paper copy of this documentation at the Skills USA National Competition. It will however, be installed on each computer as a .pdf file.
   - SCORBOT ER-4U User Manual
   - Controller USB User Manual
   - SCORBASE User Manual
   - Teach Pendant User Manual
2. Power screwdriver (with cross point and common bits) to mount components to platform
3. Watch with second hand, digital counter, or stopwatch
4. Allen wrenches, Set to include 5mm, 3mm and 7/64" minimum
5. Flow Chart Template
6. Multi-meter with leads
7. Tie Wraps

Note: ONLY the above listed items will be allowed in the contest area during the competition.

3.10: Division of Duties

3.10.1: Suggested Department Contributions

Task analysis	Both team members
System layout	Both team members
Robot program	Robot programmer
Equipment placement	Electro-mechanical integration tech
Electrical integration	Electro-mechanical integration tech
System layout sketch	Electro-mechanical integration tech
Program flow chart	Robot programmer
Notebook	Both team members

4: Safety

4.1: Importance of Safety

In industry, it is imperative to maintain a safe work environment. Federal Occupational Health and Safety Laws now mandate safe work environments for the U.S. workforce and failure to comply can result in significant fines and forced work stoppages. On the other hand, when a company's history of incidents resulting in injury is minimal, the company increases its likelihood of reduced insurance rates and workman compensation fees.

Safety considerations will be taken into account during judging to further replicate a professional industrial environment.

4.2: Safety Violations

If a team or a team member violates a safety rule, or operates their work cell in an unsafe manner, the following penalties will be enforced:

1st Violation:
Team will be issued a written warning.

2nd Violation
Team will have 50 points deducted from their total score.

3rd Violation
Team will be disqualified.

4.3: Avoiding Safety Hazards

Some safety issues:

1. The Emergency Stop Switch must be depressed when working on an active system other than when an active system is required to accomplish a required part of the task, such as teaching the robot positions.

2. Team members must wear safety glasses when they are in proximity of an operational system or performing tasks that require safety glasses, such as cutting and stripping wire.

3. Team members must keep their work area reasonably clean. Clean work places promote efficient and safe working conditions.

4. Team members must keep their teammates and other teams aware of possible dangerous situations, such as flying chips, noise, possible tool breakage, etc.

Overall safety is not limited to the above rules. Unsafe acts or practices will not be tolerated and can be grounds for immediate disqualification. Judges decisions on safety are final.

4: Practice Session

PRACTICE SESSION BRIEFING

1. **Welcome and congratulations on making it to the SkillsUSA – Robotics and Automation National Competition.**
2. **This is an official Skills USA Championship contest that was approved by National SkillsUSA in 1998.**
3. **While in the work area please observe all safety precautions. Unsafe acts may disqualify you from participating in the actual contest.**
4. **No Cell Phones. Please notify judge or committee member if you need a bathroom break. 1 Team member at a time.**
5. **Today is a practice day for you and your teammate to familiarize yourself with the supplied contest equipment. This morning your advisor is welcome to help you get setup and become familiar with the system and its components. Set up your computer, controller, slide base and robot by following the *Instructions for Robot Setup***
6. **You will be introduced to equipment that you will use in the actual contest. You will be given time and necessary help, if needed, to write programs that will test all of the components.**
7. **The equipment other than the Robot, Slide Base, Teach Pendant, Stack light, PLC and Emergency Stop will not be secured to the platform during this practice session.**
   - **Make sure you know how to operate the stack lights, sensor box, feeder and press.**
   - **Count parts**
8. **Power – We will be checking all power connections prior to providing a power cable.**
9. **Today (Tuesday) you will also be taking a written exam. We will split everyone into two groups. One group will practice on the hardware in the morning and the other will take the written exam. We will then swap in the afternoon.**
10. **The contest will be held on Wednesday and Thursday this week. The teams practicing on the hardware in the afternoon will compete on Wednesday, the other teams on Thursday.**
11. **Please review the required materials section of the contest. This is your chance to make sure you have the appropriate tools and cabling.**
12. **Safety glasses, clear lens only for each constant. Colorized lenses are not accepted. Sunglasses are not accepted.**
13. **You cannot create a wire harness today, and use it for the competition tomorrow.**
14. **No Cell Phones!**
15. **Competition Day - Tomorrow we will meet at 7:30 am in Lobby 2400. Same place as today!**
16. **Please stay at your contest are until told you can leave. All contestants must be escorted from the contest area at the same time. You work area must be clean and approved by a contest official before leaving.**
17. **Today is the day to ask questions, Thank you and good luck.**

INSTRUCTIONS FOR ROBOT SETUP

1. **The Robot platforms have been positioned on a table in their desired location.**

2. The Robot, Slide Base, Stack Light, Emergency Stop, PLC and Teach Pendant are fastened to the platform. These are the only pieces of equipment that have a permanent home. The remaining equipment and material will be placed as you see fit to enhance your system setup.

3. You have been furnished with instructions, Spec & Doc, data sheets and/or schematics of the supplied equipment. Use the provided literature to determine how to connect the devices correctly.

4. Activate SCORBASEpro software as described in the Scorbase User's Manual page 6.

5. Activate the SCORBASE program by double clicking on the SCORBASE Icon. Click on File pull-down. Select *New Program.* Then select *pro* on the Task Bar. You should now be in SCORBASEpro program.

6. Connect the Linear Slide Base to axis 7. The Slide Base may be left connected. Click on File pull-down. Select *New Program.* Click on Options pull-down. Click on Hardware *Setup.* Select *Peripherals.* Select *axis 7.* Select *Slidebase 1 .0 m Belt-drive.* See page 80 in the Scorbase Users Manual.

7. Home the robot and slide base as described in the User's Manual page 12.

8. The setup is complete.

We are here to help you today. Please feel free to ask a committee member for assistance today!

SETUP AND PRACTICE

1. Do not proceed unless you have finished the Robot Setup.

   Note: All Output connections will be made to the Controller interface panel. Do not make any connections to the controller box except the Emergency Stop switch and axis 7& 8.

2. You will be asked to write simple programs to test the inputs as you connect equipment to them. Use the SCORBASE for the ER-4u user manual.

3. Connect the 12-volt power supply to the interface board.

4. Connect the switch from the sensor box to the controller interface. Connect one wire to ground terminal and the other wire to one of the inputs. Actuating the switch should illuminate the LED associated with the input to which you connected the wire. Write a program to test this input when the switch is actuated.

5. Using the specifications from your notebook, Connect power to the proximity Sensor. Connect the sensor box to the controller interface. Test the sensor by holding a metal block near the sensor, did the controller input LED illuminate? Write a program to test this input.

6. Connect the Emergency Stop switch to the Controller. Use the Controller-USB User Manual for additional information. Ask a contest Official if you need help. Test the Emergency Stop switch. Depressing the Emergency Stop switch should stop all movement of the Robot and Slidebase.

7. Practice moving the robot and slide base in both the Joint and XYZ modes. Use the mouse, keyboard and teach pendant.

8. Practice teaching the robot and slide base positions.

9. Write short programs to verify the positions you have taught. Remember to SAVE your work FREQUENTLY.

10. **Connect the Pneumatics Parts feeder Solenoid to an output of the PLC**. Connect the Part Present Limit Switch, and the feeder limit switch to inputs. Write a program to test both solenoid (output) and switches (inputs).

11. Write a short program to cause the Robot to pick up a part if present and open and close gripper if no part is present.

12. Stack Lights. Look at the Stack light specifications to see how the stack lights are to be used and connected.

13. Pneumatic press with position sensors, you will hook up pneumatic lines during the contest and use cylinder position sensors to determine if cylinder is up or down.

14. PrintToScreenLog command. You will be asked to use this to document several aspects of the contest> Refer to the contest specification on how to use this command. Practice using this command.

15. The drawing of Flowcharts has not been addressed during this session; however you will be expected to develop a flowchart during the contest. We suggest reviewing this with your advisor.

16. REVIEW ALL CONTEST MATERIAL TODAY. So you are ready for the contest.

NOTE: You are not allowed to bring in any wire harnesses created from the practice day to the contest.

PRACTICE DAY WRAPUP

1. **Leave all of your scratch paper, notes, usb drive, etc. in the notebook.**
2. **Toolboxes may be left a location to be designated by a contest official.**
3. **Turn in the notebook to a contest official before you leave the contest area.**
4. **Insure that all notes and disks are left in your binder.**
5. **Please stay at your contest are until told you can leave. All contestants must be escorted from the contest area at the same time. You work area must be clean and approved by a contest official before leaving.**

IF IN DOUBT ASK

See you on your contest Day

GOOD LUCK!

5: Competition Introduction

5.1: The Client

SCORBOT Robotics, Inc. has been providing high quality affordable structural blocks for commercial and consumer use since 1959. As our business grows, so does our need to become more efficient and cost-effective in our manufacturing facilities. We see a future cost and quality benefit in the automation of our production process, and we desire a robotic workcell to manufacture our structural blocks.

5.2: Supplied Equipment and Materials

Our corporation will be providing automation hardware to all firms competing for our business. The hardware specifications are listed in the documentation that has been provided.

These workcell components are:

1. Computer with SCORBASE software
2. ER-4u robot, Controller, Controller Interface, and Cables
3. Teach Pendant
4. Linear Slide Base
5. Conveyor with photo-sensor
6. Electro-Pneumatic Parts Feeder with part in stack switch and part in place switch
7. Electro-Pneumatic Press with cylinder position sensors
8. Interface Board for all Input and Output connections
9. Stack lights (Red, Green, Blue and Yellow)
10. Storage area template
11. Sensor station with proximity switch and micro switch
12. Bad parts bin
13. Emergency stop switch
14. Blocks, structural, of varying materials
15. DC Power Supply and power terminal strip
16. E-Stop switch
17. Power strip and extension cord
18. Task assignments
19. Notebook
20. Mounting platform
21. Pressurized air supply for pneumatic equipment operation
22. Siemens Programmable Logic Controller (PLC with program)

5.3: Additional Supplied Hardware Information

SCORBOT Robotics, Inc. is supplying a SCORBOT ER4u robot mounted on a linear slide base in the center of work platform. This provides a work envelope on either side of the slide base. The Robot Controller Interface and Siemens PLC has been mounted to the platform. The Emergency Stop switch and Stack Lights are attached to the rear corner while the Teach Pendant is on the front corner of the platform opposite the controller. All remaining hardware may be placed on the platform at your discretion to enable efficient implementation of your solution. As you plan the placement of these hardware items, your system proposal should provide for future expansion to add more features and capabilities for future task designs.

5.4 Stack Lights:

Before any robot motion, and for certain other actions, safety warnings must be given. The Stack Lights will be used to signal safety conditions. Illumination of the appropriate light at the proper time is essential. As events occur, the Stack Lights must illuminate the proper color to indicate the event. See Stack Light Usage Section for all signal requirements.

5.5: Evaluation

The competition has been **split into 2 separate tasks**, each task building on the prior task. When your team has completed the design for the workcell, you will notify a representative from SCORBOT Robotics Inc. to review your proposed solution. This design must include the workcell layout and appropriate documentation. (See documentation Tab 5)

Once your design is approved, you will receive a green tag, allowing you to complete the operational phase of the task. Once you are ready with the operational phase, you will notify a representative from SCORBOT Robotics Inc. to review the operation of the workcell.

SCORBOT Robotics Inc. will use the following criteria during the initial interview to evaluate your proposal for each task:

- Team is ready to discuss proposal and implementation.
- Both team members active in discussion.
- Flow chart documentation is complete.
- Hardware layout documentation complete.
- I/O documentation complete.
- Robot Positions documentation started

For the operational phase of the task, SCORBOT Robotics Inc. will review the following:

- Hardware layout matches documentation.
- Wiring connections match documentation and the cell is neat and organized.
- Flow chart aligns with program.
- Operational phase will be judged.
  - ✓ Have all parts available for judges to select loading order.
  - ✓ Wait for judge to arbitrarily select the order parts are to be loaded into the parts feeder.
  - ✓ A Judge will load the parts.
  - ✓ When instructed by a judge you will nm the program.
- Stack Light Operation
- Part Testing
- Part Feeder Operation
- Part press Operation
- Part placement
- Ready to discuss Implementation
- Both Members Active in discussion

6: Task One

6.1: Overview

SCORBOT Robotics Inc. is currently seeking a firm that can provide the most efficient automation solution through written proposal and demonstration.

Your team's assignment is to assess the requirements of the Task One specifications and then to develop a proposal on how you plan to accomplish this task. This proposal must include the appropriate documentation for SCORBOT Robotics, Inc. to review in order for your team to gain the judge's approval to build and program the proposed system.

6.2: Evaluation

When your team has completed the design for the workcell layout and the appropriate documentation is completed, notify a representative from SCORBOT Robotics Inc. (Judge) to conduct a review of your proposed solution. Once approved, you will be provided a power cable to complete the work cell hardware for demonstration to the judges.

6.3: Required Documentation

SCORBOT Robotics Inc. managers want to see a complete and full proposal that will include all schematics, flow-charts, drawings, layouts, and request a meeting with the vendor before the demo is setup and run.

1. Proposed System layout for the specified task.
    a. Hardware Layout (Drawing).
    b. Robotic Interface – Input and output connections.
    c. PLC Connections
    d. Peripheral hardware connections.
2. Flow chart of proposed robotic program.
3. Any additional supporting documentation as required.

6.4: Initialization:

The plastic and metal blocks will be placed in the "automated parts feeder" in random order with the holes facing down. When the parts feeder is activated, (parts are loaded, sensor switch is activated) a block will be pushed out of the shoot, and will activate (press) the micro switch. The robot should wait for the specified amount of time after the block is in place. Use an assortment of all 8 available blocks. Remember, a contest judge will be placing the blocks in the feeder in random order during judging.

6.5: General Task Description

SCORBOT Robotics Inc. wants to automate a "hole" punch operation and quality inspection for our model A, plastic and aluminum blocks. The feeder is equipped with multiple switches to detect when the feeder stack is empty and when a block is in position for robotic pick-up. This will require the system to monitor the automated parts feeder stack for the presence of a block (Block loaded in the feeder stack). The system will then use the air cylinder to feed a block out of the feeder stack, where it will activate a sensor to notify when a block is in position for robotic pick-up. The robot will then take the block from the automated parts feeder, punch a hole in it, inspect the hole and determine whether the hole punch process was successful and the block has a hole. Blocks without holes are to be considered "bad" or "failed" blocks. Blocks with holes will be placed on the appropriate paper templates, <u>within the lines for shipment.</u>

Cycle time is again very important to SCORBOT Robotics Inc. After a full cycle has been run, a second test will be run to track cycle time. Cycle time will be counted on a final run of 4 blocks, one of each type with and without a hole.

General Task Description - Continued

Metal and Plastic Block processing

Both of our block types (Metal and Plastic) will be running on the same line. However, the holes in the aluminum blocks will need to be punched and held for 20 seconds and the Plastics blocks will need to be punched and held for 10 seconds.

NOTE: When a block is in position to be picked up, the robot shall delay for 5 seconds before retrieving the block. The system shall sound an audible alert from the computer, and the appropriate stack lights must activate when tasks begin, when the robot begins its cycle and when the punch is activated.

The lights must correspond to the operations indicated in the Stack Light Specifications Section in your 3-ring binder. SCORBOT Robotics Inc. is requesting that you provide a written document **after the demo** has been completed that notifies us in writing of any safety issues or improvements that they feel should be addressed.

6.6: Key Specific Task Requirements

- Refer to Stack Light usage Section for all signal requirements.
- Sensors must be implemented to determine if part is in the feeder and when a part is in pick-up position.
- Robot must wait 5 sec after a block is pushed out of the feeder shaft before moving sensor is pressed.
- Robot will use a sensor to determine type of block (metal or plastic).
- Robot must punch plastic blocks for 10 seconds and metal blocks for 20 seconds.
- Robot will use a sensor to inspect and verify the presence of a hole in block.
- Robot must beep when cycle has started and before punch moves
- Each team shall provide SCORBOT Robotics Inc. with a paperwork proposal at a meeting where the proposal must be approved before actual work on the robot system may begin. This paperwork should include schematics, layouts, descriptions, flowchart, overviews, and anything else they feel will show SCORBOT Robotics Inc. that they can complete the task
- Use paper storage area templates for good blocks having holes. Accuracy will be judged.
- Use bad plastic part bins to recycle the bad plastic and metal blocks without holes.
- Wiring will be judged, layout and neatness will count!

6.7: Notes

- You may use the teach pendant to teach, re-teach, jog, or make any other movement of the robot and/or peripheral device.
- There are other related tasks that are to be performed at various different locations, see documentation
- The program shall continue to run waiting for additional blocks to be loaded.
- During evaluation phase, the judge(s) will randomly select the order the blocks are to be loaded into the parts feeder. Blocks will always be loaded with their holes facing down.

7: Task Two

7.1: Overview

SCORBOT Robotics Inc. is pleased with what you, our vendors have provided and is looking to upgrade the workcell. We are having quality and throughput issues. SCORBOT Robotics Inc. is looking to add a conveyor for the good parts for visual inspection and efficient storage processes.

Your team's assignment is to assess the requirements of the Task Two specifications and then to develop a proposal on how you plan to accomplish this task. This proposal must include the appropriate documentation for SCORBOT Robotics, Inc. to review in order for your team to gain the judge's approval to build and program the proposed system.

7.2: Evaluation

When your team has completed the design for the workcell layout with the appropriate documentation, notify a representative from SCORBOT Robotics, Inc. (judge) to conduct a review of your proposed solution for Task 2.

7.3: Required Documentation

SCORBOT Robotics Inc. is concerned with a few different issues that will arise. SCORBOT Robotics Inc. managers want to see a complete and full proposal of the updated changes that should include all schematics, flow-charts, drawings, layouts, and request a meeting with the vendor before the demo is setup and run. You may update your completed documentation from previous tasks or request blank copies from the judges.

1. Updated documentation
    a. Hardware Layout with changes.
    b. Robotic Interface - Input and output connections.
    c. Peripheral hardware connections.
2. Flow chart of proposed robotic program.
3. Any additional supporting documentation as required.

7.4: Initialization:

As in the previously implemented task, the blocks will be placed in the "automated parts feeder" in random order with the holes facing down. Remember, a judge will be selecting and loading the blocks during a judging run.

7.5: General Task Description

The system will process the blocks using an automated parts feeder and operate according to all of the requirements of task 1, with the additional requirements listed below.

SCORBOT Robotics Inc. is adding a visual inspection process to the good blocks. After the Quality Control process has determined whether a block has passed or failed inspection, all good plastic and metal blocks will be placed on the non-sensor end of the conveyor for a visual inspection. After a good part is placed on the conveyor for a visual inspection. The conveyor will start motion and continue until it reached the sensor at the end of the conveyor. The blue stack light must be on while the conveyor is in motion. Once the part has reached the sensor and the conveyor has stopped. The robot will move the part to the storage template for shipment. The storage template can be placed anywhere on your worktable, but accessible for human intervention.

Note: Documentation in tab 4 section 18, reviews conveyor control

SCORBOT Robotics Inc. needs to save storage space and requires that you only use one storage template for good blocks. The good plastic blocks will be stacked on the left side of the storage template and the good metal blocks will be stacked on the right side of the storage template. Stack the parts two blocks tall for visual inspection and packaging.

Parts Counters:

SCORBOT Robotics Inc. management is now requiring the blocks to be counted as they are processed using the robot's program counter log. Both good and bad parts must be counted and the Plastic and Metal counts must both be counted separately. The counters must be displayed with the PrintToScreenLog command.

- total number of metal blocks processed
- total number of plastic blocks processed
- total of all failed blocks

This log will be saved to a file and displayed to the screen.

7.6: Key Specific Task Requirements

- Refer to Stack Light usage Section for all signal requirements.
- Good blocks will be placed on non-sensor end of the conveyor for visual inspection.
- The conveyor photo-electric sensor input is used to stop the conveyor.
- Each team shall provide SCORBOT Robotics Inc. with a paperwork proposal at a meeting where the proposal must be approved before actual work on the robot system may begin. This paperwork should include schematics, layouts, descriptions, flowchart, overviews, and anything else they feel will show SCORBOT Robotics Inc. that they can complete the task
- Use a single storage area template for good blocks having holes. Accuracy will be judged.
- Count and log the number of total good plastic & metal blocks, and bad blocks. Reset the counts to zero if the program execution is stopped.

7.7: Notes

1. You may use the teach pendant to teach, re-teach, jog, or make any other movement of the robot and/or peripheral devise.
2. There are other related tasks that are to be performed at various different locations, see documentation
3. The program shall continue to run waiting for additional blocks to be loaded.
4. During evaluation phase the judge(s) will randomly select the order the blocks are to be loaded into the automated parts feeder. Blocks will always be loaded with their holes facing down.
5. Cycle time will be counted.

9: Hardware Specifications - Controller Interface

9.1: Controller Interface

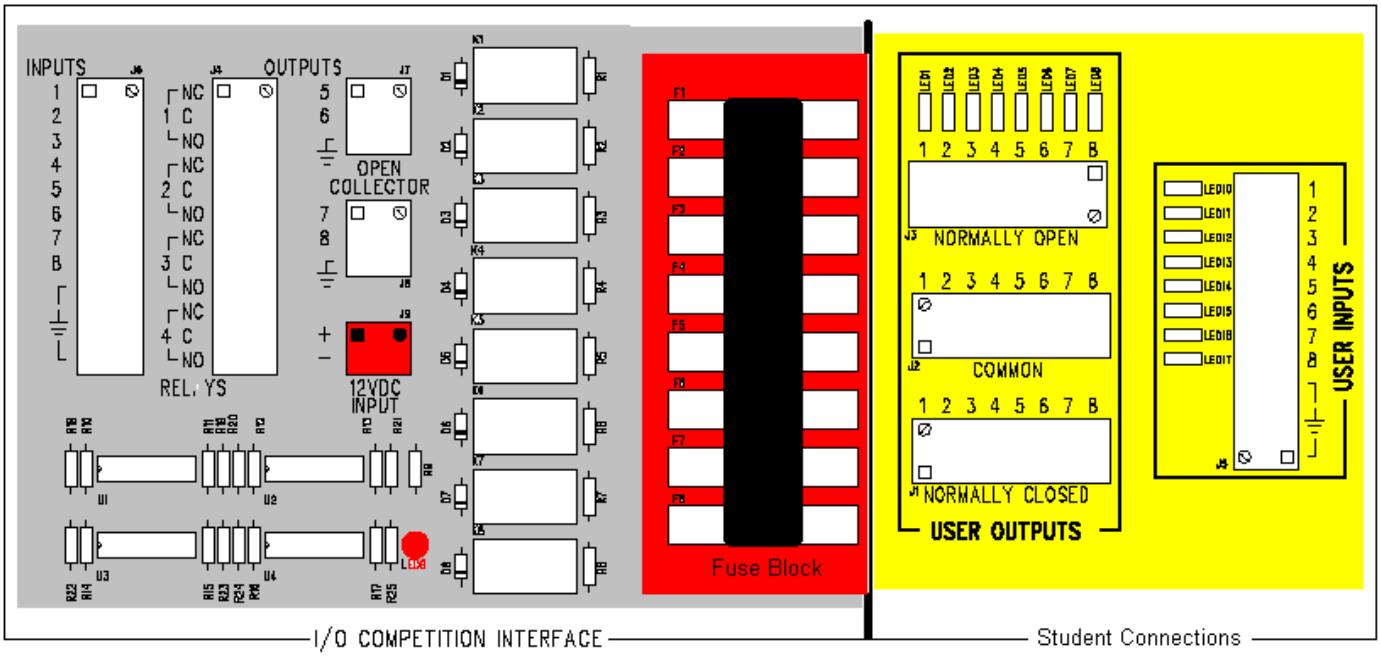

All Wiring connections are made from the Controller Interface from the Student connection side as shown above.

User Inputs: Connections are made from input devices such as sensors from the parts feeder. All connections require a ground connection and a connection to one of the eight inputs. All Input signals must be wired to the I/O board.

User Outputs: Connection from the controller to an output device. This is a SPDT relay (switch) with no power that will be wired to the PLC inputs. All Output devices must be wired to the PLC outputs.

The User outputs contain a relays which is a switch that can be turned on and off using the SCORBASE software. They are an electromagnetic switch, which means that a magnet is responsible for the state of the switch when the output is enabled or on.

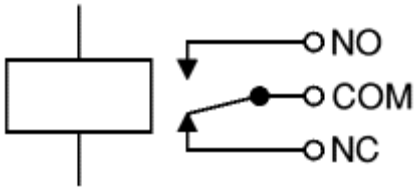

Circuit symbol for a relay

COM = Common, always connect to this, it is the moving part of the switch.
NC = Normally Closed, COM is connected to this when the relay coil is off.
NO = Normally Open, COM is connected to this when the relay coil is on.

Connect to COM and NO if you want the switched circuit to be on when the relay coil is on. Connect to COM and NC if you want the switched circuit to be on when the relay coil is off.

It is the responsibility of the contestants to verify that all fuses are in working order before the start of the contest. Points are deducted for a blown fuse during the contest.

10: Hardware Specifications - Programmable Logic Controller

10.1: PLC Definition

DO NOT DISASSEMBLE THE PLC UNIT

A programmable logic controller (PLC) is a digital computer used for automation of electromechanical processes.

PLC's are armored for severe conditions and have the facility for extensive input/output (I/O) arrangements. These connect the PLC to sensors and actuators. PLCs read input devices such as limit switches, inductive sensors, proximity sensors and reed switches. Some use machine vision. On the output side, PLCs operate pneumatic or hydraulic cylinders, solenoids, or stack light fixtures.

PLC's are programmed in "ladder logic", which strongly resembles a schematic diagram. PLC programs are typically written in a special application on a personal computer then downloaded by a direct-connection cable or over a network to the PLC. The program is stored in the PLC either in battery-backed-up RAM or some other non-volatile flash memory. Often, a single PLC can be programmed to replace thousands of relays.

Digital input signals behave as binary switches, yielding simply an On or Off signal (1 or 0, True or False, respectively). Discrete signals are sent using either voltage or current, where a specific range is designated as On and another as Off. For example, the Siemens SIMATIC S7-1200 PLC used in your process uses 12 VDC I/O, with values above 10 VDC representing On, values below 2VDC representing Off.

Figure 1: SIEMENS SIMATIC S7-1200

DO NOT DISASSEMBLE THE PLC UNIT
If you have Questions, ASK a contest official.

10.2 PLC WIRING DIAGRAM

All Input signals must be wired to the I / O board and all Output devices must be wired to the PLC outputs.

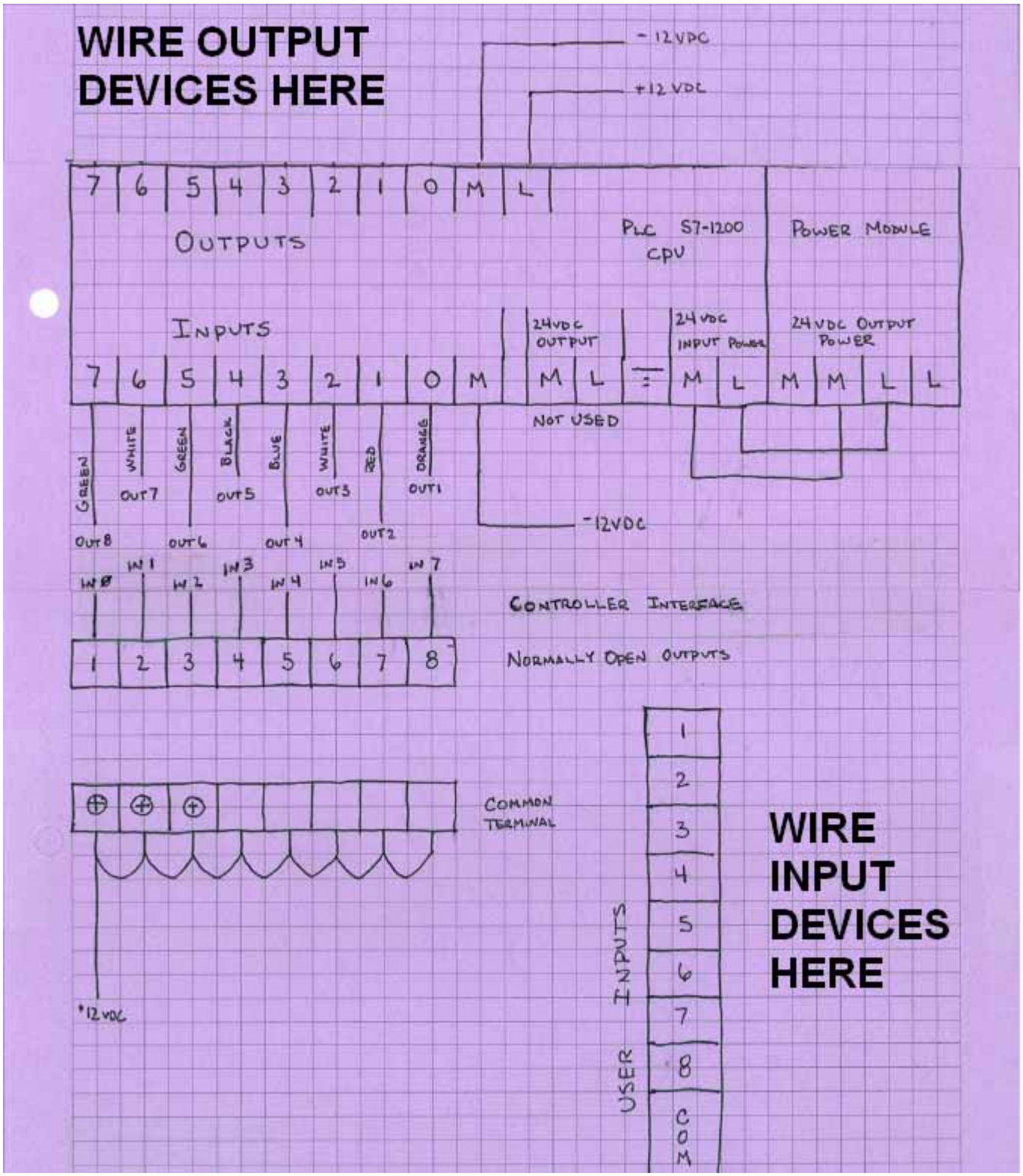

10.3 PLC Ladder Logic program

10.4. PLC I/O Description

- When Input 0 is High, Output 0 is High
- When Input 0 is Low, Output 0 is Low

- When Input 1 is High, Output 1 latches High permanently and flashes at 0.25 second intervals

- When Input 2 is high – Output 1 is low
  (Note: Input 2 must be Low for Input 1 to latch 1 and Input 1 must be low for Input 2 to unlatch Output 1)

- When Input 3 is High, , Output 3 is High
- When Input 3 is Low, Output 3 is Low

- When Input 4 is High, Output 4 is High
- When Input 4 is Low, Output 4 is Low

- When Input 5 is high – Output 6 is high for 10 seconds then turns low
- When Input 5 is low – Output 6 is low

- When Input 6 is high – Output 6 is high for 20 seconds then turns low
- When Input 6 is low – Output 6 is low

- When Input 7 is high – Output 7 is high
- When Input 7 is low – Output 7 is low

11: Hardware Specifications - Stack Light Usage

11.1: Stack Light Uses

DO NOT DISASSEMBLE THE STACK LIGHT UNIT

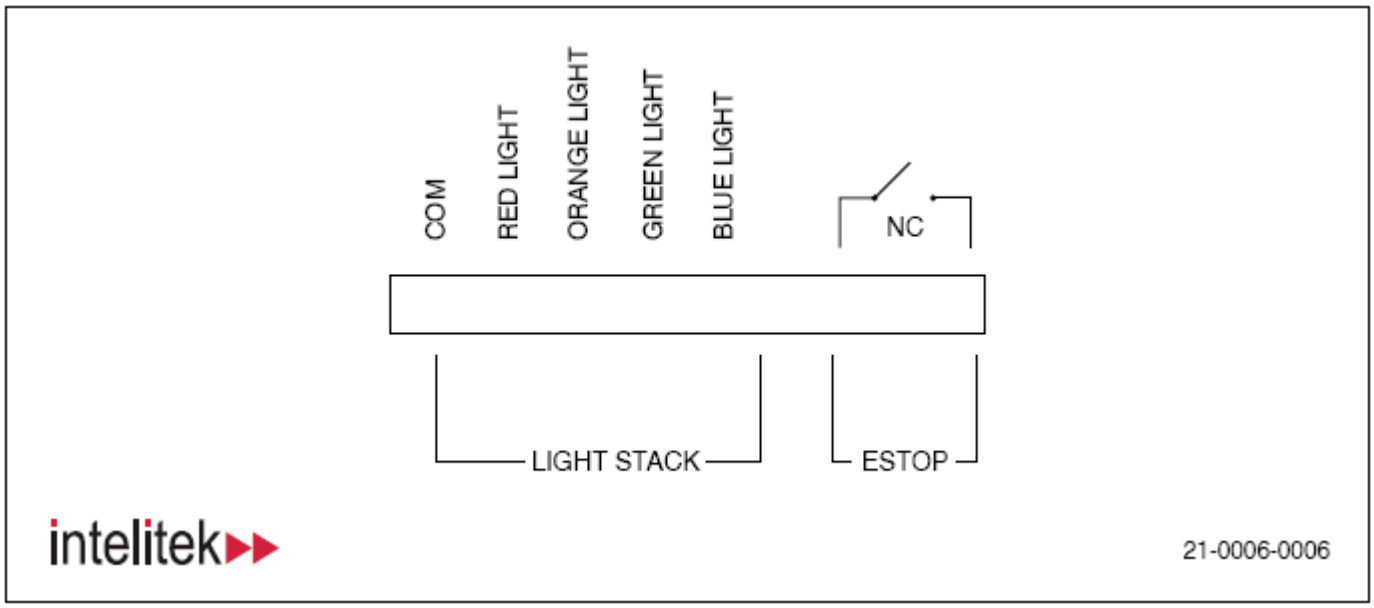

Stack Light requires 12 volts DC.

Color	Usage
Red	Flashing at 0.25 sec intervals when the robot motors have power and workspace is unsafe.
Yellow	ON during pressing operation.
Green	ON (solid) when SCORBASE program is not running and the work area is safe.
Blue	On when conveyor is moving.

DO NOT DISASSEMBLE THE STACK LIGHT UNIT

If you have Questions, ASK a contest official.

12: Hardware Specifications - Power Supply (12 Volt DC)

12.1: The 12 Volt DC Power Supply

+12 Volts DC current with common ground is used to power all devices in the work cell. The power supply is connected a terminal strip that can be located anywhere on the table.

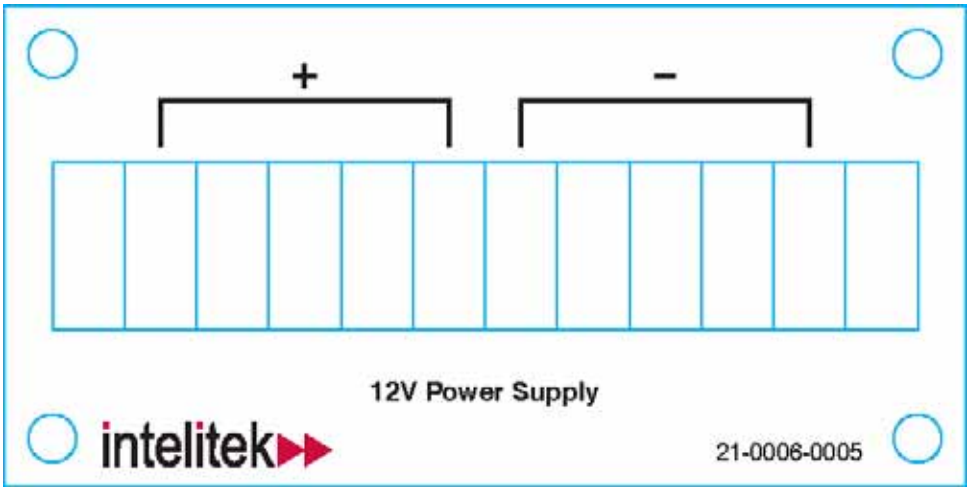

Note: The above unit (12 V Power Supply) and the Controller each have their own power supplies. Since there are multiple power supplies, one powering the device that produces a signal and the other apart of the device that accepts a signal they must have a common ground, a common reference between all power supplies.

Students must verify the polarity of the power strip is correct before the start of the contest.

13: Hardware Specifications - Sensor Box

13.1: Wiring

DO NOT OPEN SENSOR BOX

- The Sensor Box contains an Inductive Proximity Sensor and Micro-switch
- Terminal strip

Inductive Proximity (Prox) Sensor:

+ 12 Volts DC (Power for the Inductive Proximity Sensor)
- Ground (Common)
SIG Output Signal

Limit Switch

COM = Common, always connect to this, it is the moving part of the switch.
NC = Normally Closed, COM is connected to this when the switch is open (not pressed)
NO = Normally Open, COM is connected to this when the switch is closed (pressed)

DO NOT OPEN SENSOR BOX

If you have Questions, please ASK a contest official.

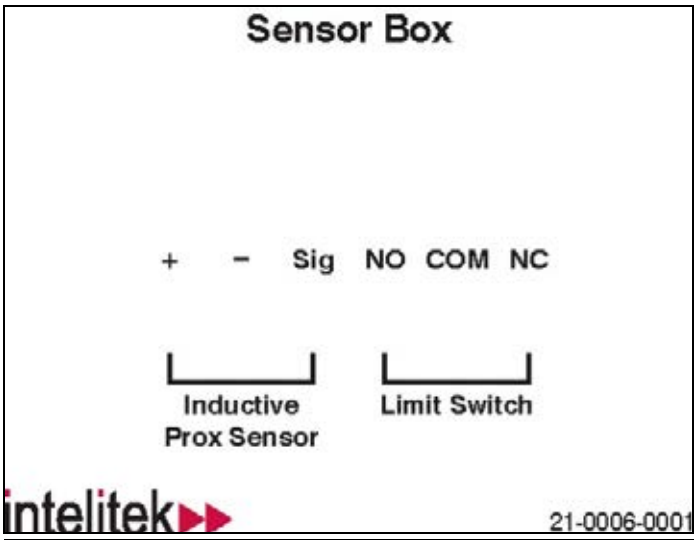

14: Hardware Specifications - Photo Sensor

14.1: Conveyor Sensor

Connect attached power supply to a 115 volt AC source.
Connect the remaining leads to an Input and Ground on the I/O Interface.
The leads are polarity sensitive.

#1 Connect to ground of the controller inputs
#2 Connection to a Robot Controller input (#1 through# 8)

With Power on the controller and the Photo Sensor connected, place hand in front of the Photo Sensor. The input should sense your hand in front of the Photo Sensor.

15: Hardware Specifications - Pneumatic Parts Feeder and Press

CAUTION: Never place your hand inside the parts feeder or press when the Air is connected.

15.1: Pneumatic Parts Feeder - Components

The parts feeder is an assembled device that consists of:

- Adjustable air regulator
- Double Acting cylinder with flow control valves
- Feeder Solenoid
- Feeder Switch – (Part-in-Stack detection sensor)
- Part "In Position for Pick-up" Switch
- Tubing
- Fittings

15.2: Pneumatic Parts Feeder - Theory of Operation

Air from the Feeder Solenoid Valve via the adjustable regulator is applied to the valve that is connected to the long cylinder. When 12 volts DC is applied to the "Feeder Solenoid" the valve is actuated causing the double acting cylinder to extend. The flow control valve controls the rate of extension. The removal of the 12-volt from the Feeder Solenoid valve allows the double acting cylinder to retract. The flow control valve controls the rate of retraction.

The "Feeder Switch" senses if a part is present in the feeder stack. "The Part In Position for Pick-up Switch" is for detecting if a part is present at the end of the feeder away from the stack , available for the Robot for part pickup.

NO = Normally Open
NC = Normally Closed

Feeder Terminal Strip

Feeder Limit Switch			Part Present Limit Switch			Extend Reed Sensor	Retract Reed Sensor
NO	COM	NC	NO	COM	NC		

Solenoid Terminal Strip

+	–	+	–	+	–
Feeder Solenoid		Press Solenoid		Aux Solenoid	

15.3: Pneumatic Press with Sensors - Components

The press consists of:

- Double acting pneumatic cylinder
- Press Solenoid Valve
- Tubing
- Fittings

15.4: Pneumatic Press with Sensors - Theory of Operation

Air from the Press Solenoid Valve via the adjustable regulator is applied to the valve that is connected to the long cylinder. When 12 volts DC is applied to the "Press Solenoid", the valve is actuated causing the double acting cylinder to extend. The flow control valve controls the rate of extension. The removal of the 12-volts from the Press Solenoid, the valve allows the double acting cylinder to retract. The flow control valve controls the rate of retraction.

A Reed Sensor determines if the cylinder is extended or retracted. The Reed Sensor is a magnetic switch that closes when an internal portion of the cylinder is in close proximity to the switch. The flow control valves control the rate of extension and/or retraction of the cylinder.

NO = Normally Open
NC = Normally Closed
Reed Sensors provide a contact closure.

Feeder Terminal Strip

Feeder Limit Switch			Part Present Limit Switch			Extend Reed Sensor	Retract Reed Sensor
NO	COM	NC	NO	COM	NC		

Solenoid Terminal Strip

+	−	+	−	+	−
Feeder Solenoid		Press Solenoid		Aux Solenoid	

16: Specifications- Flow Chart

16.1: Acceptable Symbols

Quite often, when employed by a Company or a Corporation, anything that you produce belongs to them. The corporation owns the patents and copyrights. Therefore, complete documentation is quite essential. You may think that keeping the knowledge to yourself is job security but at some time in your career you could be the recipient of an undocumented system. In this situation you will want all the documentation you can find. Document your work completely.

1. The Flow Chart symbols you use, must be the symbols provided on this page. Straight lines should be drawn with a straight edge. The program must start with a Terminator symbol and then proceed through the various symbols that explain your program. Use arrow heads to indicate the direction of program flow. Continuations without lines must use Connectors with identifying characters such as (A, b, 1 or 2 etc.). Use these symbols to develop your Flow Chart.

2. The symbols are representative of the required shapes. You may change the size to meet your needs.

3. Use a straight edge to draw the symbols. Paper is available in the back cover of your notebook.

4. Be neat. If the judges can't read them they can't score them. Points lost.

5. Your Flow Chart and Robot Program must coincide. The Flow Chart/Robot Program scoring will be based on how well you designed your Flow Chart before you started developing your Robot Program.

FLOW CHART SYMBOLS

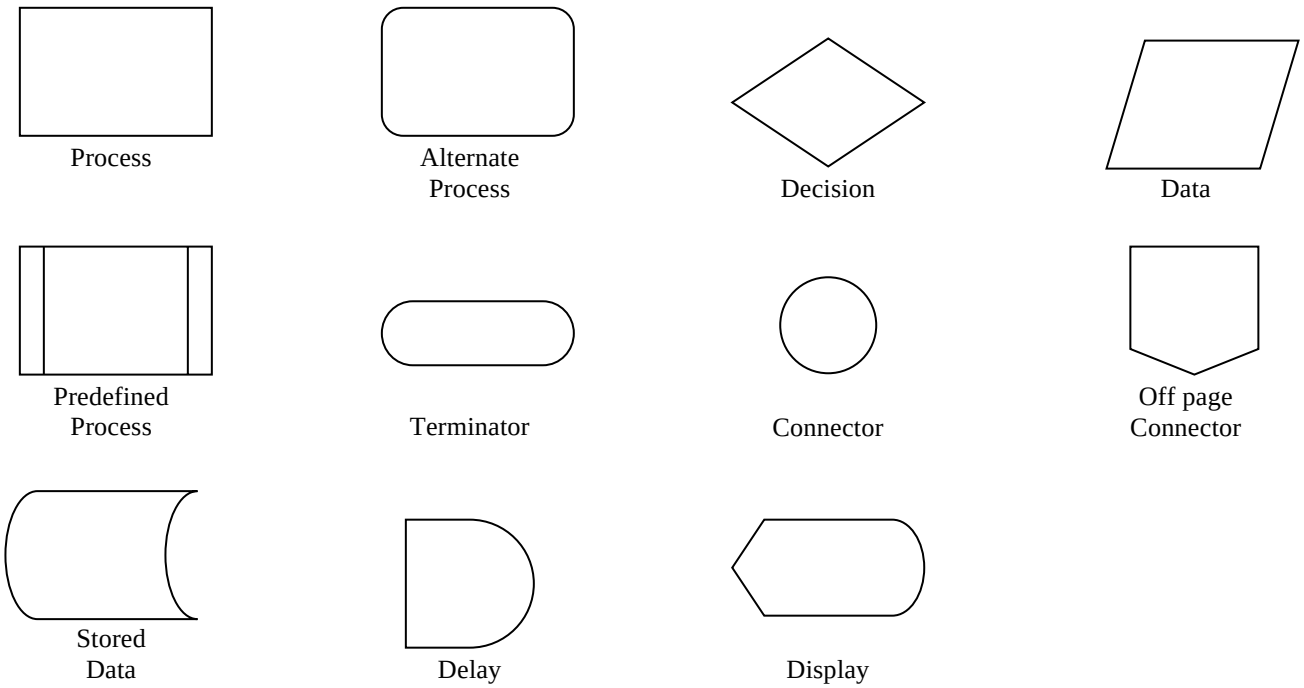

17: Specifications- Print to Screen

17.1: Command

The first line in your robot program MUST be a PrintToScreenLog command. And another PrintToScreenLog when your program reaches the point that it is looking for the next part and all of the parts have been processed. This will help in determining your run time! There may be other instances when the task requires the use of the PrintToScreenLog command

The following is a sample program to TEST the PrintToScreenLog command

1. Counting parts called: ITEM
2. Using a Variable named: NUMBER
3. Set Variable NUMBER = 0
5. LOOP:
6. Set Variable NUMBER = NUMBER + 1
7. Print to Screen & Log: ITEM= 'NUMBER'
8. Wait 25 (10ths of seconds)
9. If NUMBER<3 Jump to LOOP

Notes: If using a subroutine, they must be at the end of the program.
Any remarks must be within the subroutine itself.

18: Specifications- Conveyor Control

18.1: Sample ER-4U SCORBASE Software program

In order for the conveyor to stop correctly, please use the following commands in your program.

```
Start Conveyor Axis 8 at Speed 5 in Plus Direction
Enable Input Interrupt 6
On Input Interrupt 6 On Call Subroutine STOP_CONVEYOR
Wait 100 (10ths of seconds)
.
.
Set Subroutine STOP_CONVEYOR
Stop Conveyor Axis 8
Return from Subroutine
```

18.2: Program and Subroutines

In this example:

- Positions 12 and 13 – Parts are above the conveyor
- Positions 2 and 3 – Parts are on the conveyor
- Photo Sensor is connected to input 6

Program example:

```
Remark: **** Place part on Conveyor ****
Go to Position 12 Speed 5
Go to Position 2 Speed 5
Open Gripper
Go to Position 12 Speed 5
Start Conveyor Axis 8 at Speed 5 in Plus Direction
Enable Input Interrupt 6
On Input Interrupt 6 On Call Subroutine STOP_CONVEYOR
Wait 100 (10ths of seconds)
.
.  The rest of the main program
.
.
Remark: ***Subroutine's start here***
Set Subroutine STOP_CONVEYOR
Stop Conveyor Axis 8
Go to Position 13 Speed 5 Position 13 – part is above the conveyor
Go Linear to Position 3 Speed 5 Position 3 – part is above the conveyor
Close Gripper
Go Linear to Position 13 Speed 5
Return from Subroutine
```

Notes: All subroutines must be at the end of the program.
Any remarks must be within the subroutine itself.

Required Documentation - Safety Issues

Describe any safety issues that are of concern when running the widget process.

Required Documentation - FLOW CHART

Draw a flowchart of the Robot program. Use a straight edge. Be complete, neat and legible.

Total Points_____

See judges or instructor for additional copies.

Required Documentation – System Hardware Layout

Draw a sketch of the hardware layout of your system. Use a straight edge. Be complete, neat and legible.

Total Points_____

Required Documentation – Controller Interface Input Assignments

Describe what is connected to each input on the controller interface. The judges must be able to read and understand what is connected to each input of the controller interface.

1. _____

2. _____

3. _____

4. _____

5. _____

6. _____

7. _____

8. _____

Notes: (Optional)

_____

_____

_____

_____

Required Documentation – Controller Interface
Output Assignments

Describe what is connected to each output on the controller interface. The judges must be able to read and understand what is connected to each output of the controller interface. They should also be able to look at the device and see the wire color etc.

Output #1 COM _____ NO_____ NC_____

Output #2 COM _____ NO_____ NC_____

Output #3 COM _____ NO_____ NC_____

Output #4 COM _____ NO_____ NC_____

Output #5 COM _____ NO_____ NC_____

Output #6 COM _____ NO_____ NC_____

Output #7 COM _____ NO_____ NC_____

Output #8 COM _____ NO_____ NC_____

Required Documentation - PLC Interface
Input and Output Assignments

Describe what is connected to each input and output on the PLC. The judges must be able to read and understand what is connected to each input/output of the PLC. They should also be able to look at the device and see the wire color etc.

Inputs:

1.

2.

3.

4.

5.

6.

7.

8.

Outputs:

1.

2.

3.

4.

5.

6.

7.

8.

Required Documentation – Device Terminal Strip Assignments

Describe what is connected to each device. The judges must be able to read and understand how each device is connected.

Pneumatic Parts Feeder Pneumatic Press

Feeder Terminal Strip

Feeder Limit Switch

NO _____

COM _____

NC _____

Part Present Limit Switch

NO _____

COM _____

NC _____

Extended Reed Sensor

Top _____

Bottom _____

Retracted Reed Sensor

Top _____

Bottom _____

Solenoid Terminal Strip

Feeder Solenoid

+ _____

- _____

Press Solenoid

+ _____

- _____

Aux Solenoid

+ Not Used _____

- Not Used _____

Required Documentation – Device Terminal Strip Assignments
Continued

Describe what is connected to each device. The judges must be able to read and understand what is connected to each device.

Stack Light

COM _____

Red _____

Yellow _____

Green _____

Blue _____

Sensor Box - Inductive Prox Sensor

+ _____

- _____

Sig _____

Limit Switch

NO _____

COM _____

NC _____

Notes: (Optional)

_____

_____

_____

_____

Required Documentation – Robot Positions

Document each position used for each device as part of the robot program. (Required)

Location	**Part Feeder**	**Part Press**	**Sensor Box – Prox Sensor**	**Sensor Box Micro Switch**		**Part Template Good Metal 1**	**Part Template Good Metal 2**	**Part Template Good Metal 1**	**Part Template Good Plastic 1**	**Part Template Good Plastic 2**	**Slide Base**
Pick Position											
Above Pick Position											

Other positions that you feel would help a technician trouble shoot this Robotic workcell. (Optional)

Location											
Pick Position											
Above Pick Position											
Other											

Notes: (Optional)

Task 1

Proposal / Design Stage

No Power Cord
No Wiring

Task 1

Implementation Stage

Power Cord after initial wiring inspection

Task 2

Proposal / Design Stage

No Power Cord
No Wiring

Task 2

Implementation Stage

Power Cord after initial wiring inspection

Plastic Parts

1

2

All Parts must fit inside each bin.

Intelitek - Skills USA Competition

Metal Parts

1

2

All Parts must fit inside each bin.

Intelitek - Skills USA Competition

Scorbot Robotics, Inc. Storage Template

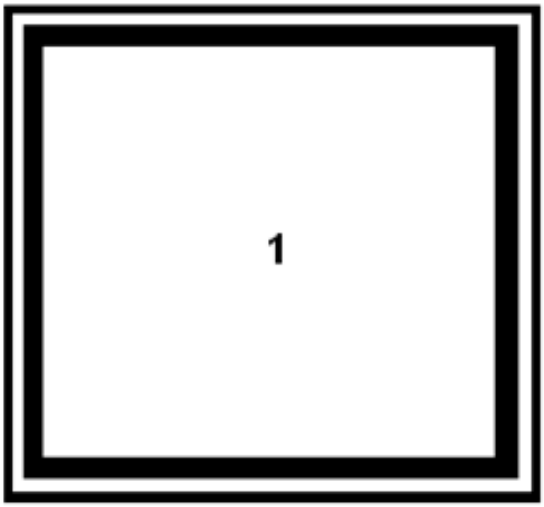

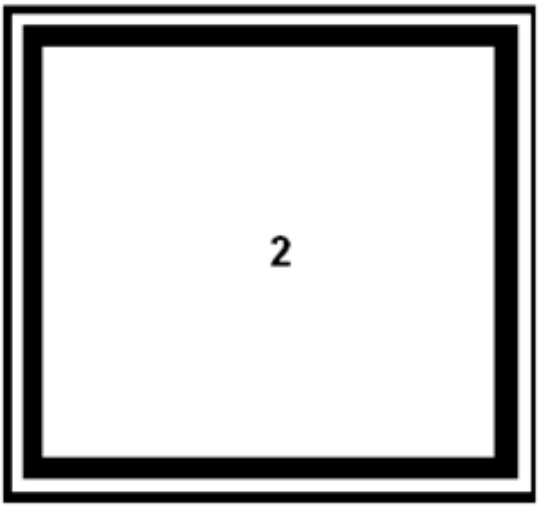

All Parts must fit inside each bin.

Intelitek - Skills USA Competition

Scorbot Robotics, Inc. Storage Template

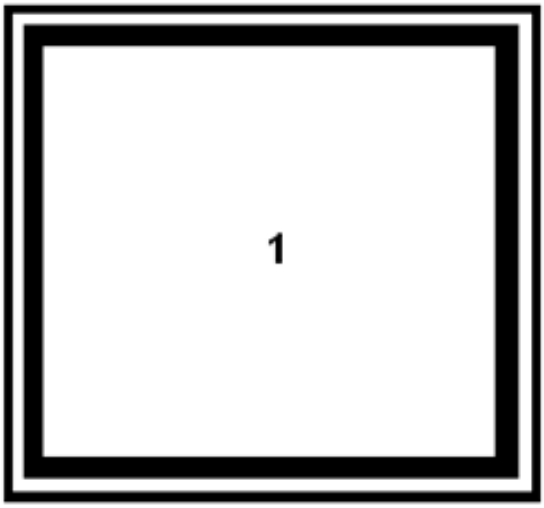

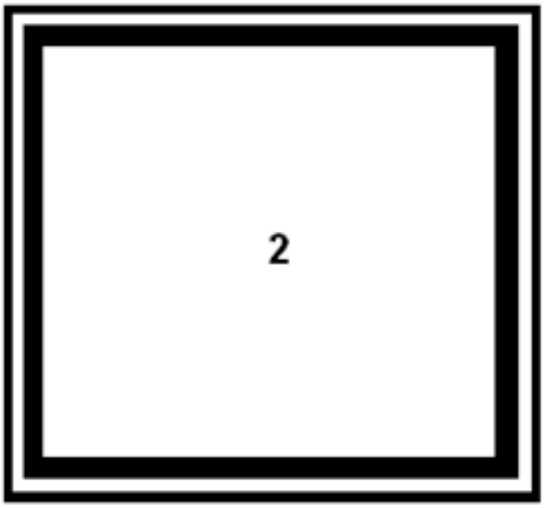

All Parts must fit inside each bin.

Intelitek - Skills USA Competition

SkillsUSA
2015 Contest Projects

Robotics: Urban Search and Rescue

Click the “Print this Section” button above to automatically print the specifications for this contest. Make sure your printer is turned on before pressing the button.

ROBOT INSPECTION CHECKLIST

Team Number_____

Inspector: _____ **Pass/Fail:** _____

Time of Inspection: _____

Inspection Type: ____ **Initial** ____ **Mandated** ____ **Random**

Pass	Fail	Rule/Guideline	Notes
		Robot fits in size limitation of 18" L x 18" W x 18" H.	
		Team name/number is attached and visible on robot.	
		Robot does **NOT** contain components that will intentionally detach on playing field.	
		Robot does **NOT** contain any components that could damage the playing field.	
		Robot does **NOT** contain any parts that are sharp, jagged, or pointed.	
		Robot poses **NO** obvious unnecessary risk of entanglement with any element on the playing field.	
		Robot contains a total of no more than **FOUR** DC motors, continuous rotation servo motors, or combination thereof.	
		Robot contains no more than **FOUR** standard-size proportional servo motors or equivalent.	
		Robot contains only **ONE** 4-6 channel R/C receiver and **ONE** DC motor controller.	
		Robot contains only **ONE** 12-volt 3,000 mAh (max) rechargeable battery pack for motor power.	
		Robot contains only **ONE** 4-cell battery pack for powering R/C radio receiver.	
		Robot wiring **MUST** be secured to chassis free and clear of any moving parts to avoid entanglement while competing.	
		Robot battery pack(s) **MUST** be securely fastened to robot's chassis away from sharp edges, corners, screws, and moving parts.	
		Robot **MUST** contain only **ONE** 900 MHz wireless camera, securely fastened to robot, powered by 9-volt battery or equivalent.	
		Robots using chain and sprocket **MUST** have sufficient slack in chain. Failure to allow slack in chain might cause a motor failure due to overheating.	
		Robot is constructed **ONLY** from approved materials listed in Appendix A of the RoboRescue 2013 Challenge Guide.	

CHALLENGE TEST

Team Number_____

Circle the best answer. All questions are worth 5 point with the exception of questions 14 and 18, which are both worth 10 points.

Terminology

1. The flow of electricity through a circuit is known as the:
   A) battery B) motor C) gear D) current

2. A wire or component that conducts electricity is known as a:
   A) conductor B) potentiometer C) switch D) motor

3. Which of the following components is used in an electrical circuit to interrupt the flow of electricity?
   A) resistor B) transformer C) switch D) flux capacitor

4. Which of the following is the source of power for your RoboRescue robot?
   A) solar panel B) battery C) internal combustion engine D) servo

5. A system of proportion for drawing is known as a (an):
   A) sketch B) scale C) curve D) angle

6. A freehand drawing is known as a:
   A) point of reference B) sketch C) perspective D) CAD drawing

7. A technical drawing that includes several views (typically top, side and front views) is called a (an):
   A) perspective drawing B) isometric projection C) multi-view drawing D) side view

Mechanisms

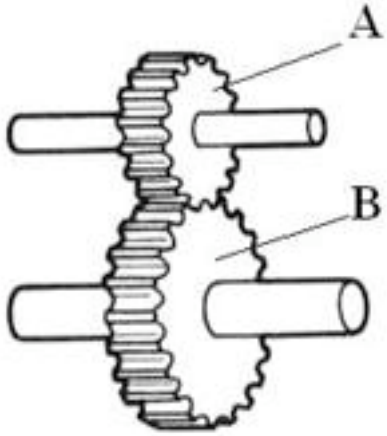

8. A transfer of energy or power from the motor shaft to the wheels or axles without a gear or pulley is called:
A) direct drive B) indirect drive C) overdrive D) drive shaft

9. A transfer of energy or power from the motor shaft to the wheels or axles, typically through gears and pulleys is known as:
A) direct drive B) indirect drive C) overdrive D) drive shaft

10. In the figure, if Gear A is turning in a clockwise direction, which direction is Gear B turning?
A) clockwise B) counter-clockwise C) it is not turning

11. Referring to the figure, if a motor is driving the shaft (axle) that Gear A is on, is the shaft on Gear B rotating faster or slower than A?
A) faster B) slower C) same speed

12. Referring to the figure, if Gear A has 20 teeth and Gear B has 30 teeth, and Gear A is turning at a rate of 10 rpm, then at what rate is Gear B rotating
A) 15 rpm B) 6.67 rpm C) 10 rpm D) 20 rpm

13. A rotating machine that changes electrical energy to mechanical energy is called a:
A) lever B) Gear C) motor D) axle

14. (10 points) Explain the process by which power from the battery moves the wheels on a robot chassis.

General Robotics

15. The frame upon which the rest of a mobile robot is constructed is known as the:
    A) chassis B) end effector C) gripper D) drive gear

16. A device or tool connected to the end of a robot arm is known as a (an):
    A) drive gear B) pinion gear C) motivator D) end effector

17. Which of the following is <u>not</u> one of Issaac Asimov's Three Laws for Robots:
    A) A robot may not injure a human being or, through inaction, allow a human being to come to harm.
    B) A robot must obey any orders given to it by human beings, except where such orders would conflict with the First Law.
    C) A robot must protect its own existence as long as such protection does not conflict with the First or Second Law.
    D) A robot must have at least one end effector to be classified as a robot.

18. (10 points) What are three important considerations to designing and building a gripper device for a Robo-Resue robot?

ANSWER KEY

All questions are worth 5pts with the exception of questions 14 & 18, which are both worth 10pts.

Terminology

1. The flow of electricity through a circuit is known as:
   D) current

2. A wire or component that conducts electricity is known as a:
   A) conductor

3. Which of the following components is used in an electric circuit to interrupt the flow of electricity?
   C) switch

4. Which of the following is the source of power for your RoboRescue robot?
   B) battery

5. A system of proportion for drawing is known as a:
   B) scale

6. A freehand drawing is known as a:
   B) sketch

7. A technical drawing that includes several views (typically top, side and front views) is called a (an):
   C) multi-view drawing

Mechanisms

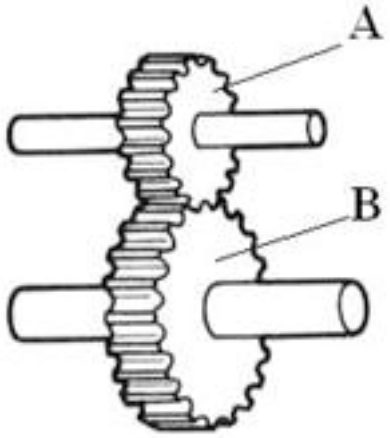

8. A transfer of energy or power from the motor shaft to the wheels or axles without a gear or pulley is called:
   A) direct drive

9. A transfer of energy or power from the motor shaft to the wheels or axles, typically through gears and pulleys is known as:
   B) indirect drive

10. In the figure, if gear A is turning in a clockwise direction, which direction is Gear B turning?
    B) counter-clockwise

11. Referring to the figure, if a motor is driving the shaft (axle) that Gear A is on, is the shaft on Gear B rotating faster or slower than A?
    B) slower

12. Referring to the figure, if Gear A has 20 teeth and Gear B has 30 teeth, and Gear A is turning at a rate of 10 rpm, then at what rate is Gear B rotating
    A) 15 rpm

13. A rotating machine that changes electrical energy to mechanical energy is called a:
    C) motor

14. (10 points) Explain the process by which power from the battery moves the wheels on a robot chassis. Answers will vary. Battery provides electromotive force that either directly spins the wheels, or spins gears or pulleys that transmit the rotational energy from the motor to the wheels while gaining or losing mechanical advantage.

General Robotics

15. The frame upon which the rest of a mobile robot is constructed is known as the:
    A) chassis

16. A device or tool connected to the end of a robot arm is known as a (an):
    D) end effector

17. Which of the following is <u>not</u> one of Issaac Asimov's Three Laws for Robots:
    D) A robot must have at least one end effector to be classified as a robot.

18. (10 points) What are three important considerations to designing and building a gripper device for a Robo-Resue robot? Answers may vary.
    - Must hold the ordnance securely while traversing the course
    - Must deploy the device consistently without failure
    - Must be able to open the mailboxes
    - Must be able to open the house door
    - Must be operable via R/C control
    - Must have enough power/torque to operate
    - and potentially more

SkillsUSA

Robotics: Urban Search & Rescue Challenge

Explosive Ordnance Disposal (EOD)

2014 Technology Demonstration Event

Team Guide

(Version: February 6, 2014)

Note: *Event rules/regulations are subject to revision prior to competition.*

Contents

Event 4
Purpose 4
Clothing Requirement 4
Eligibility 4
Equipment and Materials 5
Supplied by Technical Committee 5
Supplied by Competing Team 5
Challenge Overview 6
Contest Field 6
Command Center 6
Pit Area 7
Urban Search & Rescue Challenge Kit 7
Challenge Checklist 7
Sample Event Agenda 8
Contest Guidelines/Rules 8
Engineering Notebook 10
Challenge Course Rules 10
Penalties 11
Standards & Competencies 12
Committee-Identified Academic Skills 13
Math Skills 13
Science Skills 13
Engineering Skills 13

© 2012-14 Pitsco Education • Robotics: Urban Search & Rescue Challenge

Language Arts Skills 14

Scoring Rubrics 15

Appendix 22

(A) Urban Search & Rescue Challenge Kit 22

(B) Command Center 23

(C) Engineering Journal 24

(D) 2014 Challenge Field 26

Corporate sponsor:

Pitsco Education

Robotics: Urban Search & Rescue Challenge

SkillsUSA National Championships

© 2012-14 Pitsco Education • Robotics: Urban Search & Rescue Challenge

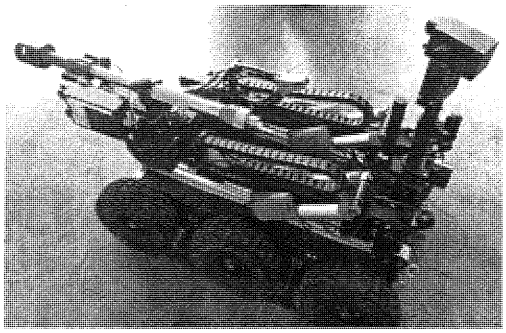

Explosive Ordnance Disposal Robot, Springfield (MO) Fire Department

Event

The 2014 Robotics: Urban Search & Rescue Challenge: Explosive Ordnance Disposal (EOD) enables students to create a mobile robot like those employed by emergency service personnel (fire, police, military). The robot is designed to secure an area by locating, neutralizing, moving, and disposing of explosive materials. The demand for designers, skilled technicians, and manufacturing workers who are fluent in mechanical design and electrical systems and highly skilled in troubleshooting and maintenance of robotic systems is projected to continue to grow. The current generation of students is expected to take artificial intelligence and robotics into the evolving world of emergency services, finding new ways to help trained personnel react more quickly and effectively. Therefore, it is imperative that our future labor force be on the leading edge of current and emerging technologies and possess the technical and team skills necessary to maintain industry leadership in design, manufacture, maintenance, and operation of life-saving robotic equipment.

Purpose

- To evaluate team members' skills and preparation for employment in fields related to and including robotics, engineering, automation, manufacturing, electronics, and emergency services.
- To recognize outstanding performance by participants in scenarios that require problem solving and teamwork in a real-world situation.

Clothing Requirement

Official SkillsUSA attire is required. For complete details, visit www.skillsusastore.org. If you have questions about clothing or logo attire, call 800-401-1560 or 703-956-3723.

Eligibility

The Urban Search & Rescue (USAR) Challenge is open to active SkillsUSA members.

© 2012-14 Pitsco Education • Robotics: Urban Search & Rescue Challenge

Equipment and Materials

Supplied by Technical Committee

- Challenge field: 12 'x 12 'simulated neighborhood
- Field elements: components of a residential area and obstacles to traverse, open, and manipulate in order to locate and dispose of simulated explosive ordnances
- A command center area equipped with a table, two chairs, and a video monitor (see "Command Center" specifications in Appendix)
- General workspace for each team designated as a "pit" area, including one table, two chairs, and access to a 120-volt electrical supply

Supplied by Competing Team

- Safety equipment – eye protection is required at all times
- Laptop computer (optional)
- SkillsUSA Urban Search & Rescue Challenge Kit and additional allowed parts and raw materials necessary to create the robot and arm mechanism (see "Urban Search & Rescue Challenge Kit Bill of Materials" in Appendix)
- Team number affixed to robot
- Presentation software for oral presentation to judges (optional)
- CAD/CAM software for blueprint design (optional)
- Completed Engineering Notebook (**Notes**: See example information on pages 24-25. Technical drawing/blueprint of robot drive chassis must be included in notebook.)
- Pens, pencils, and paper
- Tools (suggested):
    - Allen wrench set (English)
    - Clamping vise
    - Metal tin snips
    - Power strip
    - Calculator
    - Tape measure
    - Hammer
    - Metal file
    - Flat-head and Phillips-head screwdrivers
    - Wire strippers (one set)
    - Wire cutters/snips (one set)
    - Roll of electrical tape
    - 4" nylon wire ties (25 pack)
    - Multimeter
    - Multinut pliers
    - Metal-cutting hacksaw (manual)

© 2012-14 Pitsco Education • Robotics: Urban Search & Rescue Challenge

- Cordless drill with charger
- Set of standard drill bits
- Pliers (needle nose or regular)
- Set of box wrenches

Challenge Overview

A two-member team builds its robot and arm mechanism prior to the competition and then, during the competition, remotely operates the robot, which should be capable of locating, grabbing, and moving simulated ordnances on the challenge course. This remotely operated vehicle (ROV) must traverse the course, locate the ordnances, secure them, and properly dispose of them. Each team will perform one round of competition consisting of **a time-limited mission to locate and dispose of the two ordnances**.

- During the mission, each team must complete several procedures specified in the rules provided at the event.
- The mission will be limited to **six minutes**.

Each two-member team will work from a command center to remotely operate its robot to carry out the mission. The command center will be equipped with a monitor displaying the video feed from an onboard wireless camera system attached to the robot. The robot will begin the challenge course from a starting point. The timed mission starts when the robot begins to move and ends when the robot returns to the starting point. The robot must have completed the mission within the allotted **six-minute time limit** for the team to receive full credit.

Contest Field

- 12 'x 12 'simulated residential area (See photos in Appendix D.)
- Features of neighborhood:
  - Starting point from which robot deploys
  - Containment boundaries marking the 12 'x 12 'challenge area
  - Objects often found in a neighborhood setting: home, street, grass, mailboxes

Note: Ordnances are strategically positioned on the challenge course in locations that require a robot to open doors and reach for and grab items to deliver them to a safe disposal site. Some ordnances may be located outside a direct line of sight from the command center, in which case tele-op capabilities will be put to use.

Command Center

The command center will be located within view of the contest field and equipped with a table, two chairs, and a video monitor. (See "Command Center" specifications in Appendix.)

© 2012-14 Pitsco Education • Robotics: Urban Search & Rescue Challenge

Pit Area

A pit area where teams modify their robots and arm mechanisms will be provided. Each team will have a conference table, two chairs, and access to a 120-volt electrical outlet.

Urban Search & Rescue Challenge Kit

The Urban Search & Rescue EOD robot may be built using only components that comprise the Urban Search & Rescue Challenge Kit and other approved parts listed in the Appendix. Each kit contains everything necessary to construct a basic robot for the Urban Search & Rescue Challenge competition.

Upon registering for the event, teams may purchase an Urban Search & Rescue Challenge Kit. Each TETRIX®-based Urban Search & Rescue Challenge Kit contains:

- Bill of materials along with a TETRIX® Builder's Guide
- Metal construction elements for fabricating a robot chassis
- Metal construction elements for fabricating an arm mechanism
- Tools for construction
- Control system and power electronics including 4-channel 2.4 GHz R/C transmitter (up to 6 channels are allowed), receiver, DC motor controller, rechargeable battery pack, and charger
- 900 MHz wireless video camera system (**Note**: The Pitsco-specified camera is required.)
- Hookup diagrams and troubleshooting tips

Note: Additional approved parts and raw materials may also be used. A bill of materials for the Urban Search & Rescue Challenge Kit and a list of approved optional parts and raw materials can be found in the Appendix.

Challenge Checklist

- ☐ 1. Purchase robot challenge kit.
- ☐ 2. Thoroughly review Team Guide, scoring rubrics, and TETRIX® Builder's Guide.
- ☐ 3. Design and build robot and arm mechanism within specifications that is capable of grabbing, holding, and moving objects. Document process and blueprints in Engineering Notebook.
- ☐ 4. Practice driving robot on various types of terrain while looking at a video monitor displaying the feed from the onboard camera.
- ☐ 5. Review basic mechanical, robotics, and electrical knowledge in preparation for written test.
- ☐ 6. Plan, prepare, and practice presentation.

© 2012-14 Pitsco Education • Robotics: Urban Search & Rescue Challenge

☐ 7. Attend local, regional, state, and national Urban Search & Rescue Challenge competitions.

Sample Event Agenda

Following is a sample agenda for an Urban Search & Rescue Challenge event.

1. **Check in** (submit prebuilt robot and Engineering Notebook to judges for inspection)
2. Robot and Engineering Notebook **inspection** by judges (items then returned to teams)
3. The following can be done simultaneously if the number of event personnel permits:
   - Teams complete **technical presentation** (oral and physical) over robot, Engineering Notebook, and arm mechanism (following presentation, items will remain in judges' possession until challenge field competition).
   - Final robot and arm mechanism **inspection** by judges
   - **Written test** administered
4. **Lunch**
5. Challenge field **competition** conducted

Contest Guidelines/Rules

Note: Guidelines and rules are subject to change.

- Each **team** must be composed of two members.
- Each robot must have an **identification label** with the team's number listed.
- Each **technical presentation** should last from 10 to 15 minutes and should be primarily oral, with supporting materials of printed or electronic media and physical models. Students should be prepared to discuss the roles they played, their robot design, and the functions of their robot. (**Note:** The Technical Committee will **not** provide projector, screen, or other presentation equipment.)
- **Before attending** the competition, team members should design, build, and experiment with robots constructed from the SkillsUSA Urban Search & Rescue Challenge Kit. Additional TETRIX or other approved parts and raw materials (see Appendix) may also be used. The prebuilt robot and arm mechanism will be required to grab, hold, and move objects during the mission.
- The robot's arm mechanism must be capable of opening a standard-size mailbox and reaching **into the box up to five (5) inches**, grabbing the simulated ordnance, and pulling it out of the

© 2012-14 Pitsco Education • Robotics: Urban Search & Rescue Challenge

mailbox. The arm mechanism must be capable of reaching items positioned **up to nine (9) inches above the floor**.

- The simulated ordnances (wooden block below, left) are not included in the competition kit and are **approximately 2.7 inches cubed**. The handles on doors and mailboxes (below, right) are **3.3 inches long and .41 of an inch wide**.

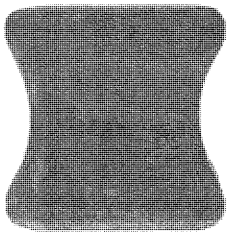

Ordnance (wooden block)

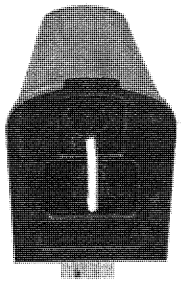

Mailbox handle

- **Part Restrictions:**
  - Limit of **four** continuous rotation DC motors or servo motors per competing robot
  - Limit of **four** standard-scale proportional servo motors or equivalent
  - Maximum of **one** R/C transmitter (non-programmable, **up to six channels**) and **one** DC motor controller (**Note:** To avoid radio interference issues, Urban Search & Rescue teams must use the 4-channel Futaba 2.4 GHz R/C control system included in the Urban Search & Rescue Challenge Kit, though up to 6 channels are allowed.)
  - **One** rechargeable battery pack, maximum 12 volt (**Note:** In the interest of keeping the competition fair, it is strongly recommended that Urban Search & Rescue teams use the 12-volt, mAh NiMH rechargeable battery pack and charger included in the Urban Search & Rescue Challenge Kit.)
  - Robot must fit into an **18" x 18" x 18"** space when starting **but may be expanded to a larger size during the challenge**.

- Each team must provide in its Engineering Notebook a **technical drawing or blueprint** detailing the construction of its robot drive chassis and additional drawings/blueprints for its associated arm mechanism.

- The robot and arm mechanism must be **assembled by the team prior to the competition**.

- All robots will be required to **pass inspection** by judges to determine if all of the parts used are from the list of allowed parts. Any team whose robot fails inspection will be given 10 minutes to correct the infraction, after which the robot will be disqualified if proper modifications have not been made.

© 2012-14 Pitsco Education • Robotics: Urban Search & Rescue Challenge

- Robots will not be allowed to compete with an arm mechanism that poses **danger** to competitors or could potentially cause damage to the challenge field.
- Accuracy of the robot's **construction matching the blueprint** will be considered during scoring. All necessary parts and tools for construction must be brought to the competition site.
- Team members will be required to follow proper safety procedures and use eye protection.
- Teams may bring a **laptop computer and blueprint drawings** of their robot and arm mechanism designs to the contest building area for use only as reference tools. A description of the assembly process is required with the Engineering Notebook. The designs also may be printed or hand-drawn copies.
- Teams **may view the simulated neighborhood** prior to the beginning of competition and may watch other competing teams during the challenge event.
- **Final team results** will be posted at the conclusion of the event, and each team will receive a copy of the **judges' rubrics** with scores and comments about the team's performance.

Engineering Notebook

The Engineering Notebook (example information on pages 24-25) will be submitted for judging at check-in. Required elements:

- Overall neat and professional appearance
- A complete bill of materials for the robot drive chassis and arm mechanism designed and used in competition at the event
- A description of the assembly process for the robot drive chassis and arm mechanism
- Illustrations, sketches, photos, and written log entries accurately documenting the design and prototyping iterations detailing the evolution and logical progression of the robot's design

Challenge Course Rules

Note: Team members must wear safety glasses at all times while they are in the competition area! All teams will be expected to adhere to the official rules for the Urban Search & Rescue Challenge competition and compete in a positive and professional manner.

- At the competition site, the **simulated residential area** will be provided and maintained by the technical committee. During competition, the course will be reset to its original state before each team competes.

© 2012-14 Pitsco Education • Robotics: Urban Search & Rescue Challenge

- The Urban Search & Rescue Challenge: Explosive Ordnance Disposal event will consist of **a single timed mission** for each team. During the mission, the robot has up to six minutes to navigate the course, complete the challenge, and return to home base.
- Each team will **operate its mobile robot via R/C** and navigate by line of sight and by the video feed from an onboard wireless camera. The command center will be within view of the playing field, and team members must remain at the command center while competing.
- An official will be in charge of placing the team's robot at the starting point on the challenge course. (**Reminder:** The robot must fit within an 18" x 18" x 18" space at the start but **may expand to any size after it enters the neighborhood**.)
- After a "clear" signal is issued by a challenge course official, **time will begin** as soon as the robot moves. Following completion of a mission, **time will stop** upon successful return to home base following disposal of two simulated explosive ordnances.
- Robots should remain on roads and paths within the neighborhood in order to avoid property damage. Shortcuts are not allowed and will result in penalties.
- The mission will last a **maximum of six minutes**.
- Team members are **not allowed to touch** their robot at any time while a mission is in progress, unless instructed to do so by a judge.
- An official will award points for the team's mission based on the official **"Challenge Field Skills" rubric**. The team ranking for the total time to complete the mission will be used to determine bonus points within the rubric.

Penalties

- A deduction (see rubric in Appendix) will be assessed each time an ordnance is dropped. If necessary, and at the request of a team member, a course official will set the ordnance upright so that the team can continue its mission.
- All **parts** except nuts and bolts must remain attached to the robot for the duration of the mission.
- Each time the **robot stalls or becomes hung up** and has to be freed by officials, a deduction will be assessed. An official will free a robot at the request of a team member.
- A deduction will be assessed whenever a robot goes off the designated path within the neighborhood or **outside of the course boundaries**. **Shortcuts are not allowed**.

© 2012-14 Pitsco Education • Robotics: Urban Search & Rescue Challenge

Standards & Competencies

RR 1.0 Demonstrate knowledge in safety rules and practices

1.1 Maintain a safe work area.
1.2 Demonstrate safe and correct use of hand tools.
1.3 Follow safety rules during robotic assembly.
1.4 Demonstrate safe operation of robotic equipment in tele-op mode.

RR 2.0 Produce technical documentation

2.1 Keep an engineering notebook detailing design discussions, design details, design changes, and troubleshooting notes.
2.2 Develop a technical drawing of the final competitive robot design.
2.3 Produce a bill of materials for the final competitive robot design.
2.4 Explain design choices and changes made within the engineering design process.

RR 3.0 Demonstrate knowledge of robot parts

3.1 Identify mechanical and electrical parts of the final robot design.
3.2 Demonstrate understanding of the mechanical and electrical functions of the parts of the final robot design.

RR 4.0 Demonstrate understanding of robot mechanical systems

4.1 Identify mechanical systems within the final robot design.
4.2 Demonstrate the function of control systems of the final robot design.
4.3 Demonstrate and explain the functioning of the drivetrain of the robot.
4.4 Demonstrate and explain the functioning of the package delivery system of the robot.

RR 5.0 Demonstrate understanding of robot electrical systems

5.1 Identify electrical/electronic systems within the final robot design.
5.2 Demonstrate and explain the function of electrical control systems of the final robot design.

RR 6.0 Demonstrate tele-op skills and real-time problem solving

6.1 Demonstrate ability to safely and quickly maneuver the robot through rough and unknown terrain via tele-op.
6.2 Demonstrate ability to overcome challenging areas of course terrain via tele-op.
6.3 Demonstrate ability to locate objects through remote robotic manipulation via tele-op.
6.4 Demonstrate ability to transport objects via tele-op.

RR 7.0 Demonstrate ability to present and explain technical information

7.1 Demonstrate correct and effective use of oral, written, and technological tools to present technical information regarding engineering design process, robot construction, and robotic tele-op control.

© 2012-14 Pitsco Education • Robotics: Urban Search & Rescue Challenge

7.2 Demonstrate knowledge of design choices and implementations during the engineering design process.
7.3 Demonstrate knowledge of team processes and individual team member contributions.

Committee-Identified Academic Skills

Math Skills

- Students use fractions in contextual applications to solve problems.
- Students use percentages in contextual applications to solve problems.
- Students solve problems through the contextual application of proportions.
- Students measure time, distance, and angles within contextual problem-solving applications.
- Students simplify numeric expressions.
- Students use comparisons, predictions, and inferences in analyzing data to solve a problem.
- Students utilize modeling techniques to solve problems.
- Students write and solve algebraic expressions in one or more variables.
- Students use derived measurements to solve problems.

Science Skills

- Students apply the scientific method to plan and conduct experiments.
- Students apply knowledge of heat, sound, mechanical, chemical, electrical, and light energy within contextual problem-solving applications.
- Students apply knowledge of kinetic and potential energy in contextual applications to solve problems.
- Students apply knowledge of Newton's laws of motion to solve problems.
- Students apply knowledge of simple and compound machines to solve problems.
- Students apply knowledge of gears, motors, and linkages to solve problems within contextual applications.
- Students use formulas to solve problems.
- Students apply scientific knowledge within the engineering design process.
- Students apply knowledge of force and motion concepts in contextual problem solving.

Engineering Skills

- Students apply the engineering design process to solve a contextual problem.
- Students apply the principles of circuit analysis.
- Students apply the elements of circuit design and construction.
- Students understand and apply energy and power types, sources, and conversions.
- Students apply methods of maintaining, servicing, troubleshooting, and repairing systems.
- Students apply skills and techniques related to building, repairing, and maintaining robotic mechanisms.

© 2012-14 Pitsco Education • Robotics: Urban Search & Rescue Challenge

- Students apply techniques and technologies related to the production of technical drawings.
- Students apply basic mechanical skills related to robotic design, construction, and troubleshooting.
- Students understand and apply knowledge of safety during construction and use of equipment.
- Students apply problem-solving and engineering-design processes to solve unforeseen challenges.

Language Arts Skills

- Students make effective use of spoken, written, and visual communications with team members within the problem-solving and engineering-design processes.
- Students make effective use of spoken, written, and visual communications with a variety of audiences.
- Students use appropriate information resources within the research-and-design process.
- Students organize and synthesize information for use in research-and-design processes and in formal presentations.
- Students demonstrate the ability to correctly read and interpret rules, instructions, and specifications within the robotic challenge.
- Students demonstrate the proper use of language, both written and verbal.

© 2012-14 Pitsco Education • Robotics: Urban Search & Rescue Challenge

Urban Search & Rescue Challenge – Possible Points: 200 **Team: _____**

Robot Drive Chassis & Technical Drawing

Objective	Points Performance Level					Points
	5	10	20	30	40	
Design, construction, and durability of power drive-system assembly (gears, chain, sprocket, wheels, treads)	Drive-system assembly is poorly designed or constructed and lacks durability.	Drive-system assembly demonstrates adequate design, construction, and durability.	Drive-system assembly demonstrates average design, construction, and durability.	Drive-system assembly demonstrates above-average design, construction, and durability.	Drive-system assembly demonstrates excellent design, construction, and durability.	
Electrical components installation and wire management	Poor effort given to wire routing and safety management.	Minimal effort given to wire routing and safety management.	Average effort given to wire routing and safety management.	Above-average effort given to wire routing and safety management.	Excellent effort given to wire routing and safety management.	
Basic driving performance test (FWD, REV, turn right, turn left)	Robot chassis does not function in any capacity when demonstrated.	Robot chassis powers up but performs only one basic control function.	Robot chassis powers up but performs only two basic control functions.	Robot chassis powers up but performs only three basic control functions.	Robot chassis powers up and performs all four basic control functions.	
Technical drawing quality	Drawing detail and quality are inferior.	Drawing detail and quality are adequate.	Drawing detail and quality are average.	Drawing detail and quality are above average.	Drawing detail and quality are excellent.	
Accuracy of technical drawing to assembled drive train	Technical drawing does not match assembled drive train.	Technical drawing matches few components of the assembled drive train.	Technical drawing matches major components of the assembled drive train.	Technical drawing matches all major and most minor components of the assembled drive train.	Technical drawing matches all major and all minor components of the assembled drive train.	
					Total:	

Judge's comments:

© 2012-14 Pitsco Education • Robotics – Urban Search & Rescue Challenge

Urban Search & Rescue Challenge – Possible Points: 150 **Team: _____**

Arm Mechanism

Objective	Points Performance Level					Points
	10	20	30	40	50	
Performance test of arm mechanism	Arm mechanism does not function in any capacity.	Arm mechanism functions unreliably and is poorly engineered.	Arm mechanism functions satisfactorily but lacks engineering efficiency.	Arm mechanism functions well and is moderately engineered.	Arm mechanism functions reliably and is well constructed and engineered.	
Arm stability and clearance to robot drive chassis	Arm is not stable and does not clear the robot drive chassis at all points.	Arm is not stable but clears the robot drive chassis at all points.	Arm is stable but does not clear the robot drive chassis at all points.	Arm is stable and clears the robot drive chassis at all points.	Arm is very secure and clears the robot drive chassis at all points.	
Appropriateness of arm end effector to size and weight of ordnance	Ordnance does not fit into arm end effector with sufficient freedom to allow transport and disposal.	Ordnance fits into arm end effector with sufficient freedom to allow transport, but device lacks the ability/strength to effectively dispose of the ordnance.	Ordnance fits into arm end effector with sufficient freedom to allow transport and has minimal ability/strength to effectively dispose of the ordnance.	Ordnance fits into arm end effector with sufficient freedom to allow transport and has adequate ability/strength to effectively dispose of the ordnance.	Ordnance fits into arm end effector with sufficient freedom to allow transport and exceeds the amount of ability/strength to effectively dispose of the ordnance.	
					Total:	

Judge's comments:

© 2012-14 Pitsco Education • Robotics: Urban Search & Rescue Challenge

Urban Search & Rescue Challenge – Possible Points: 150 Team: _____

Engineering Technician Notebook

Objective	Points Performance Level					Points
	10	20	30	40	50	
Overall content format and appearance	Notebook did not follow mission format/guidelines or demonstrate understanding of task.	Notebook adequately follows some, but not all, of the mission format/guidelines and demonstrates understanding of task.	Notebook adequately follows mission format/guidelines and demonstrates understanding of task.	Notebook meets the mission format/guidelines and demonstrates understanding of task.	Notebook is outstanding and goes above and beyond format/guidelines and demonstrates understanding of task.	
Logical structure and documentation	Team did not document the project in a satisfactory manner.	Team adequately documents project but lacks logical flow and structure of project from start to finish.	Team completed documentation, flow, and structure in an average manner, but more could have been done.	Team documented the project "journey" with good flow and structure from beginning to end.	Team's documentation of project demonstrates an effort that goes above and beyond.	
Technical accuracy and bill of materials	Technical content (descriptions, sketches, drawings, tables, and figures) does not match robot project build.	Technical content (descriptions, sketches, drawings, tables, and figures) matches robot project build in a satisfactory manner.	Technical content (descriptions, sketches, drawings, tables, and figures) adequately matches robot project build.	Technical content (descriptions, sketches, drawings, tables, and figures) matches robot project build.	Technical content (descriptions, sketches, drawings, tables, and figures) matches robot project build with outstanding detail and clarity.	
					Total:	

Judge's comments:

© 2012-14 Pitsco Education • Robotics: Urban Search & Rescue Challenge

Urban Search & Rescue Challenge – Possible Points: 150 **Team: _____**

Technical Presentation

Objective	Points Performance Level					Points
	10	20	30	40	50	
Explanation of mechanical systems within the robot	Demonstrates little knowledge of mechanical parts and their functions.	Demonstrates minimal knowledge of mechanical parts and their functions.	Demonstrates adequate knowledge of mechanical parts and their functions.	Demonstrates a working knowledge of mechanical parts and their functions within the mechanical system.	Demonstrates a thorough knowledge of mechanical parts and their functions within the mechanical system.	
Explanation of electrical systems within the robot	Demonstrates little knowledge of electrical parts and their functions.	Demonstrates minimal knowledge of electrical parts and their functions.	Demonstrates adequate knowledge of electrical parts and their functions.	Demonstrates a working knowledge of electrical parts and their functions within the electrical system.	Demonstrates a thorough knowledge of electrical parts and their functions within the electrical system.	
Description of design challenges and solutions implemented for the robot	Demonstrates little knowledge of design challenges faced or solutions implemented.	Demonstrates minimal knowledge of design challenges faced and solutions implemented.	Demonstrates adequate knowledge of design challenges faced and solutions implemented.	Demonstrates a working knowledge of design challenges faced and solutions implemented.	Demonstrates a thorough knowledge of design challenges faced and solutions implemented.	
					Total:	

Judge's comments:

© 2012-14 Pitsco Education • Robotics: Urban Search & Rescue Challenge

Urban Search & Rescue Challenge – Possible Points: 250 **Team: _____**

Challenge Field Skills

Objective	Points Performance Level						Points
	50	100	150	170	200	Time	
Challenge Course Mission: Ordnance retrieval and containment	Robot became disabled on the course and could not continue.	Robot found at least one of the ordnances but was unable to retrieve and dispose of it.	Robot was able to retrieve and dispose of one of the ordnances.	Robot was able to retrieve and dispose of both of the ordnances, but not within the allotted time.	Robot was able to retrieve and dispose of both of the ordnances within the allotted time.		

Point Deduction Worksheet		
Infraction	Number of Incidents	Points to Deduct
Loss of ordnance (5 points per incident)		
Vehicle stalled (5 points per incident)		
Robot intentionally outside of boundaries (25 points per incident)		
Deduction Total (insert into main scoring rubric)		

Total Time		
1st Place Time . . . . . 50 points Top 25% of times . . . . . 30 points 26% to 50% of times . . . 10 points **Time Bonus**		
Challenge Field Points (subtotal)		
Deduction Total (from Point Deduction Worksheet)		
Challenge Field Point Total		

Judge's comments:

© 2012-14 Pitsco Education • Robotics: Urban Search & Rescue Challenge

Urban Search & Rescue Challenge – Possible Points: 100

Team: _____

Written Test

Topical Area	Number of Questions	Points Possible per Question	Points Possible	Points Scored
Terminology	7	5	35	
Mechanisms	8	5	40	
General Robotics (including Asimov's Laws of Robotics)	5	5	25	
			Total:	

Judge's comments:

© 2012-14 Pitsco Education • Robotics: Urban Search & Rescue Challenge

Team: _____

Urban Search & Rescue Challenge Total Possible Points: 1,000

Category	Possible Points	Points Scored	Judge's Comments
Robot Drive Chassis & Technical Drawing	200		
Arm Mechanism	150		
Engineering Technician Notebook	150		
Technical Presentation	150		
Challenge Field Skills	250		
Written Test	100		
Team Total:	**1,000**		

© 2012-14 Pitsco Education • Robotics: Urban Search & Rescue Challenge

Appendix

(A) Urban Search & Rescue Challenge Kit

Urban Search & Rescue Challenge Kit Bill of Materials	
Item	**Quantity**
4" Wheel	6
16T Sprocket	4
24T Sprocket	6
32T Sprocket	2
Chain w/Link	1
Chain Breaker	1
Gear Hub Spacer	10
100 mm Axle	12
DC Drive Motor	2
Motor Mount	2
Axle Set Collar	12
288 mm Channel	6
160 mm Channel	4
96 mm Channel	4
32 mm Channel	6
L Bracket	6
Flat Building Plate	2
Flat Bracket	6
2" Standoff Post	12
1" Standoff Post	12
180 Servo	2
Single Servo Bracket	2
Bronze Bushing	24
Axle Hub	12
Motor Hub	2
1/8" Axle Spacer	24
3/8" Axle Spacer	6
Motor Power Cable	2
On/Off Switch	1
12-volt TETRIX Battery	1
Motor Speed Controller	1
1/2 SHCS	200
Hex Keys	1
Zip Tie Pack	20
Kep Nut	200
3/8" BHCS	50
NiMH Battery Charger	1
4ch R/C Controller	1
288 mm Flat Bar	4
Servo Pivot w/Bearing	1
80T Gear	2
40T Gear	2
Electronics Deck	1
Green Bin	1
Lid	1
Top Card	1
Side Label Sticker	1
TETRIX® Builder's Guide	1

Camera Pack (required)	
Item	**Quantity**
900 MHz Camera	1
9-volt Adaptor	1
Camera Mount	1

Control System	
Item	**Quantity**
2.4 GHz 4ch R/C Controller	1

Additional parts and raw materials legal for use:

- TETRIX Building System parts (http://www.pitsco.com/Robotics_Urban_Search_and_Rescue_Challenge_Kit, 800-835-0686, or akirby@pitsco.com)
- Other robot parts similar in size and design to Urban Search & Rescue Challenge Kit materials
- (1) 12" x 24" sheet of acrylic plastic, maximum thickness of 0.250"
- (1) 12" x 24" sheet of aluminum, maximum thickness of .080"
- Raw material used for fabricating custom robot parts

© 2012-14 Pitsco Education • Robotics – Urban Search & Rescue Challenge

(B) Command Center

- (1) Six-foot table or equivalent
- (2) Chairs
- (1) Video monitor connected to 900 MHz camera receiver (camera and receiver included in Urban Search & Rescue Challenge Kit)
- Access to a 120-volt electrical outlet

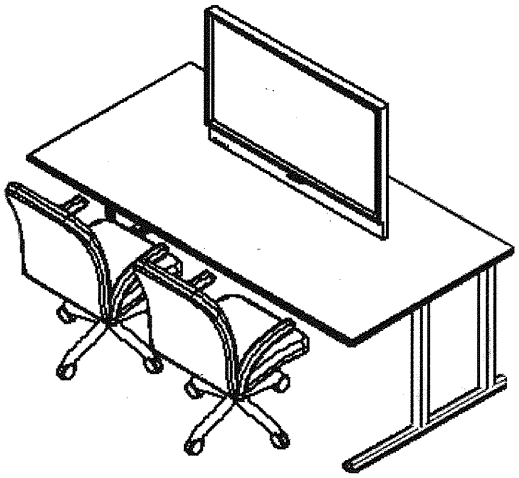

Urban Search & Rescue Command Center

© 2012-14 Pitsco Education • Robotics: Urban Search & Rescue Challenge

(C) Engineering Journal

Engineering Journal Worksheet

Objectives	Achievements	Issues and Concerns

Create a rough sketch of your robot. Create a legend with symbols for specific components of your robot, such as sensors and motors.

	Legend

© 2012-14 Pitsco Education • Robotics: Urban Search & Rescue Challenge

Engineering Journal Worksheet

Explain the testing that was done with the robot you created to make sure it could perform your objectives.

If the robot could not perform all of your objectives, what steps did you take to redesign the robot so that it could complete the exercise?

Describe what technical skills you learned in this activity? (For example: building, wiring, designing)

Describe the nontechnical skills you have learned in this activity? (For example: teamwork, communication)

From your experiences in building this robot, list some ideas for other robots, or for modifications to this robot. Please include what objectives would be met with the new designs, and what steps would need to be taken to meet those objectives.

© 2012-14 Pitsco Education • Robotics: Urban Search & Rescue Challenge

(D) 2014 Challenge Field

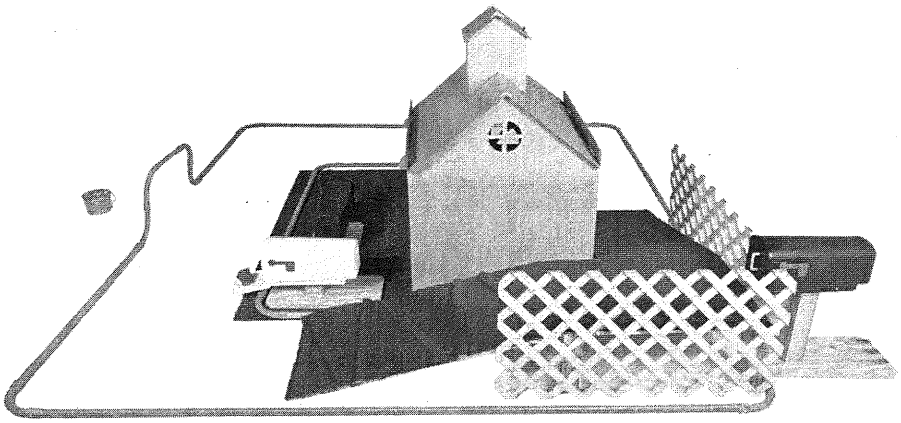

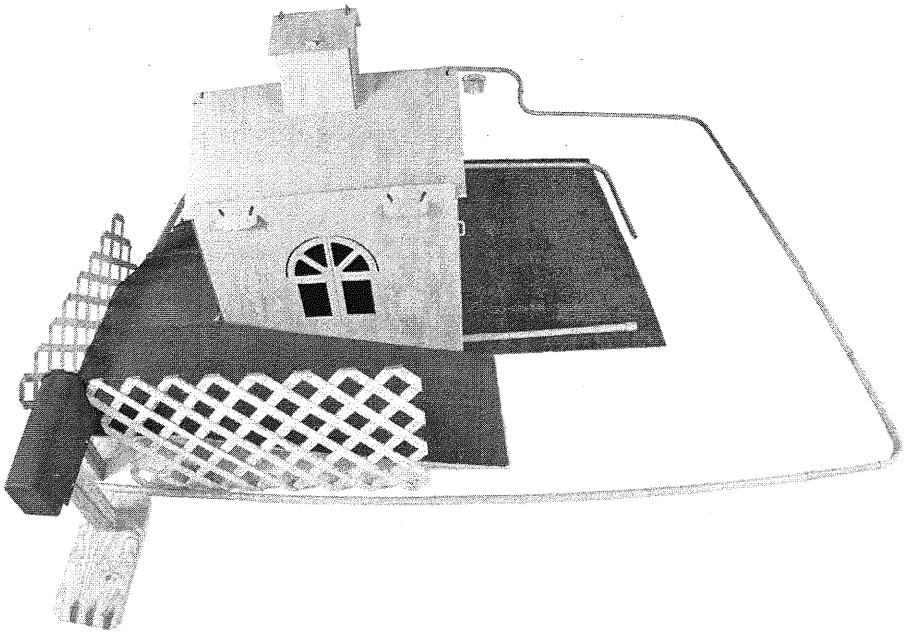

© 2012-14 Pitsco Education • Robotics: Urban Search & Rescue Challenge

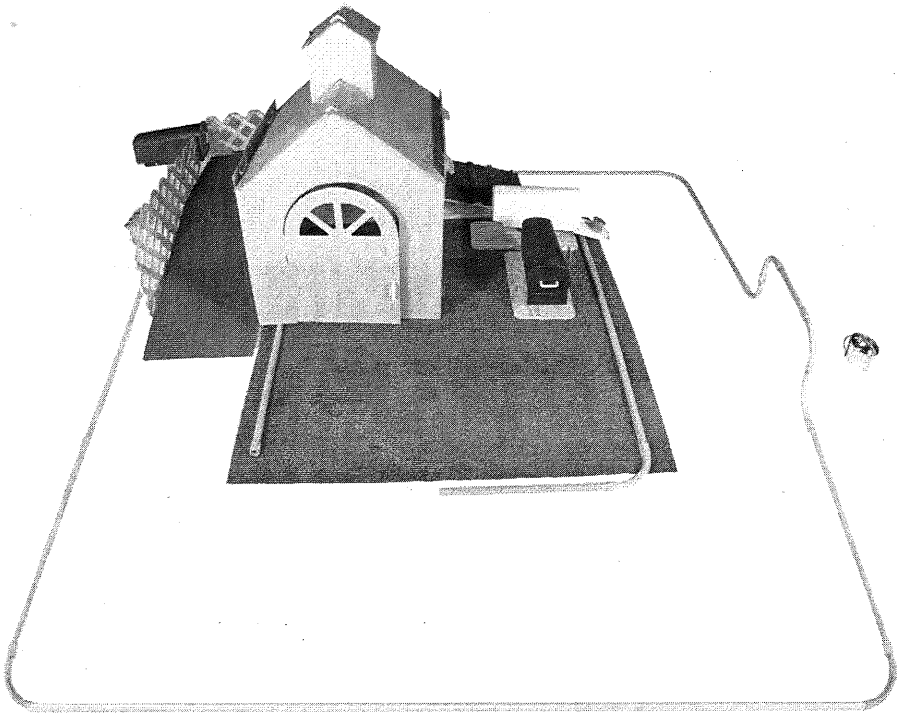

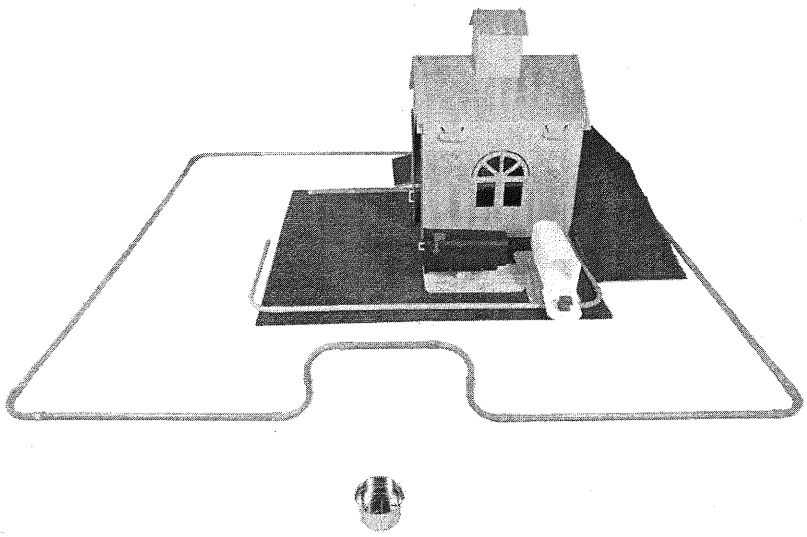

© 2012-14 Pitsco Education • Robotics: Urban Search & Rescue Challenge

ROBOT INSPECTION CHECKLIST

Team Number_____

Inspector: _____ **Pass/Fail:** _____

Time of Inspection: _____

Inspection Type: ____ **Initial** ____ **Mandated** ____ **Random**

Pass	Fail	Rule/Guideline	Notes
		Robot fits in size limitation of 18" L x 18" W x 18" H.	
		Team name/number is attached and visible on robot.	
		Robot does **NOT** contain components that will intentionally detach on playing field.	
		Robot does **NOT** contain any components that could damage the playing field.	
		Robot does **NOT** contain any parts that are sharp, jagged, or pointed.	
		Robot poses **NO** obvious unnecessary risk of entanglement with any element on the playing field.	
		Robot contains a total of no more than **FOUR** DC motors, continuous rotation servo motors, or combination thereof.	
		Robot contains no more than **FOUR** standard-size proportional servo motors or equivalent.	
		Robot contains only **ONE** 4-6 channel R/C receiver and **ONE** DC motor controller.	
		Robot contains only **ONE** 12-volt 3,000 mAh (max) rechargeable battery pack for motor power.	
		Robot contains only **ONE** 4-cell battery pack for powering R/C radio receiver.	
		Robot wiring **MUST** be secured to chassis free and clear of any moving parts to avoid entanglement while competing.	
		Robot battery pack(s) **MUST** be securely fastened to robot's chassis away from sharp edges, corners, screws, and moving parts.	
		Robot **MUST** contain only **ONE** 900 MHz wireless camera, securely fastened to robot, powered by 9-volt battery or equivalent.	
		Robots using chain and sprocket **MUST** have sufficient slack in chain. Failure to allow slack in chain might cause a motor failure due to overheating.	
		Robot is constructed **ONLY** from approved materials listed in Appendix A of the RoboRescue 2013 Challenge Guide.	

Robotics: Urban Search & Rescue Challenge

Explosive Ordnance Disposal (EOD)

2015 Technology
Demonstration Event

Team Guide

(Version: September 2, 2014)

Note: *Event rules/regulations are subject to revision prior to competition.*

© 2012-15 Pitsco Education • Robotics: Urban Search & Rescue Challenge

Contents

Event 4

Purpose 4

Clothing Requirement 4

Eligibility 4

Equipment and Materials 5

Supplied by Technical Committee 5

Supplied by Competing Team 5

Challenge Overview 6

Contest Field 6

Command Center 6

Pit Area 7

Urban Search & Rescue Challenge Kit 7

Challenge Checklist 7

Sample Event Agenda 8

Contest Guidelines/Rules 8

Engineering Notebook 10

Challenge Course Rules 10

Penalties 11

Standards & Competencies 12

Committee-Identified Academic Skills 13

Math Skills 13

Science Skills 13

Engineering Skills 14

© 2012-15 Pitsco Education • Robotics: Urban Search & Rescue Challenge

Language Arts Skills 14

Scoring Rubrics 15

Appendix 22

(A) Urban Search & Rescue Challenge Kit 22

(B) Command Center 23

(C) Engineering Journal 24

(D) 2014 Challenge Field 26

Corporate sponsor:

Pitsco Education

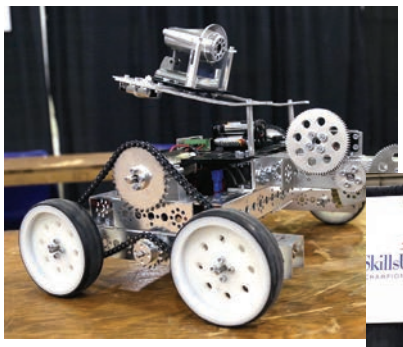

Robotics: Urban Search & Rescue Challenge

2014 SkillsUSA National Champions

© 2012-15 Pitsco Education • Robotics: Urban Search & Rescue Challenge

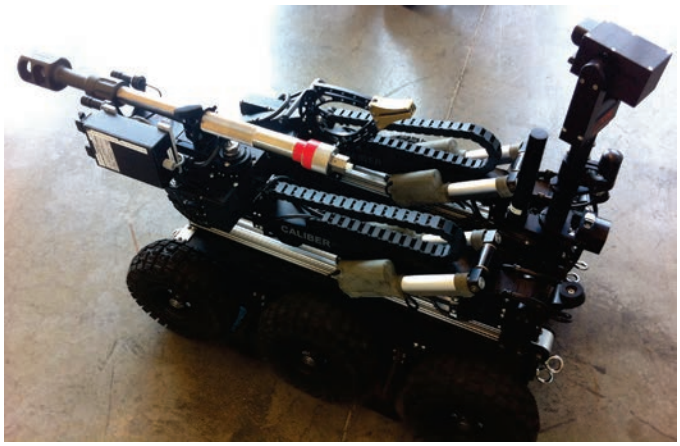

Explosive Ordnance Disposal Robot, Springfield (MO) Fire Department

Event

The 2014 Robotics: Urban Search & Rescue Challenge: Explosive Ordnance Disposal (EOD) enables students to create a mobile robot like those employed by emergency service personnel (fire, police, military). The robot is designed to secure an area by locating, neutralizing, moving, and disposing of explosive materials. The demand for designers, skilled technicians, and manufacturing workers who are fluent in mechanical design and electrical systems and highly skilled in troubleshooting and maintenance of robotic systems is projected to continue to grow. The current generation of students is expected to take artificial intelligence and robotics into the evolving world of emergency services, finding new ways to help trained personnel react more quickly and effectively. Therefore, it is imperative that our future labor force be on the leading edge of current and emerging technologies and possess the technical and team skills necessary to maintain industry leadership in design, manufacture, maintenance, and operation of life-saving robotic equipment.

Purpose

- To evaluate team members' skills and preparation for employment in fields related to and including robotics, engineering, automation, manufacturing, electronics, and emergency services.
- To recognize outstanding performance by participants in scenarios that require problem solving and teamwork in a real-world situation.

Clothing Requirement

Official SkillsUSA attire is required. For complete details, visit www.skillsusastore.org. If you have questions about clothing or logo attire, call 800-401-1560 or 703-956-3723.

Eligibility

The Urban Search & Rescue (USAR) Challenge is open to active SkillsUSA members.

© 2012-15 Pitsco Education • Robotics: Urban Search & Rescue Challenge

Equipment and Materials

Supplied by Technical Committee

- Challenge field: 12' x 12' simulated neighborhood
- Field elements: components of a residential area and obstacles to traverse, open, and manipulate in order to locate and dispose of simulated explosive ordnances
- A command center area equipped with a table, two chairs, and a video monitor (see "Command Center" specifications in Appendix)
- General workspace for each team designated as a "pit" area, including one table, two chairs, and access to a 120-volt electrical supply

Supplied by Competing Team

- Safety equipment – eye protection is required at all times
- Laptop computer (optional)
- Fully assembled, tested, and operational ordnance disposal robot conforming to the guidelines and parts restrictions listed in this document (see "Urban Search & Rescue Challenge Kit Bill of Materials" in Appendix)
- Team number affixed to robot
- Presentation software for oral presentation to judges (optional)
- CAD/CAM software for blueprint design (optional)
- Completed Engineering Notebook (**Notes**: See example information on pages 24-25. Technical drawing/blueprint of robot drive chassis must be included in notebook.)
- Pens, pencils, and paper
- Tools (suggested):
    - Allen wrench set (English)
    - Clamping vise
    - Metal tin snips
    - Power strip
    - Calculator
    - Tape measure
    - Hammer
    - Metal file
    - Flat-head and Phillips-head screwdrivers
    - Wire strippers (one set)
    - Wire cutters/snips (one set)
    - Roll of electrical tape
    - 4" nylon wire ties (25 pack)
    - Multimeter
    - Multinut pliers
    - Metal-cutting hacksaw (manual)

© 2012-15 Pitsco Education • Robotics: Urban Search & Rescue Challenge

- Cordless drill with charger
- Set of standard drill bits
- Pliers (needle nose or regular)
- Set of box wrenches

Challenge Overview

A two-member team builds its robot and arm mechanism prior to the competition and then, during the competition, remotely operates the robot, which should be capable of locating, grabbing, and moving simulated ordnances on the challenge course. This remotely operated vehicle (ROV) must traverse the course, locate the ordnances, secure them, and properly dispose of them. Each team will perform one round of competition consisting of **a time-limited mission to locate and dispose of the two ordnances**.

- During the mission, each team must complete several procedures specified in the rules provided at the event.

- The mission will be limited to **six minutes**.

Each two-member team will work from a command center to remotely operate its robot to carry out the mission. The command center will be equipped with a monitor displaying the video feed from an onboard wireless camera system attached to the robot. The robot will begin the challenge course from a starting point. The timed mission starts when the robot begins to move and ends when the robot returns to the starting point. The robot must have completed the mission within the allotted **six-minute time limit** for the team to receive full credit.

Contest Field

- 12' x 12' simulated residential area (See photos in Appendix D.)
- Features of neighborhood:
  - Starting point from which robot deploys
  - Containment boundaries marking the 12' x 12' challenge area
  - Objects often found in a neighborhood setting: home, street, grass, mailboxes

Note: Ordnances are randomly and strategically positioned on the challenge course in locations that require a robot to open doors and reach for and grab items to deliver them to a safe disposal site. Some ordnances may be located outside a direct line of sight from the command center, in which case tele-op capabilities will be put to use.

Command Center

The command center will be located within view of the contest field and equipped with a table, two chairs, and a video monitor. (See “Command Center” specifications in Appendix.)

© 2012-15 Pitsco Education • Robotics: Urban Search & Rescue Challenge

Pit Area

A pit area where teams modify their robots and arm mechanisms will be provided. Each team will have a conference table, two chairs, and access to a 120-volt electrical outlet. **Note:** Cameras must remain *off* while in the pit area to minimize the chance of interference for the team actively driving the course.

Urban Search & Rescue Challenge Kit

The Urban Search & Rescue EOD robot may be built using only components that comprise the Urban Search & Rescue Challenge Kit and other approved parts listed in the Appendix. Each kit contains everything necessary to construct a basic robot for the Urban Search & Rescue Challenge competition.

Upon registering for the event, teams may purchase an Urban Search & Rescue Challenge Kit. Each TETRIX®-based Urban Search & Rescue Challenge Kit contains:

- Bill of materials along with a *TETRIX® Builder's Guide*
- Metal construction elements for fabricating a robot chassis
- Metal construction elements for fabricating an arm mechanism
- Tools for construction
- Control system and power electronics including 4-channel 2.4 GHz R/C transmitter (up to 6 channels are allowed), receiver, DC motor controller, rechargeable battery pack, and charger
- 900 MHz wireless video camera system (**Note**: Any wireless camera system with a single camera mounted to the robot and single video feed display is allowed. A video monitor/TV with RCA inputs will be supplied by the Technical Committee for the purpose of displaying the team's video feed in the command center.)
- Hookup diagrams and troubleshooting tips

Notes: Any off-the-shelf robotics building platform may be used for this event, as long as the robot complies with all parts restrictions and is operated by nonprogrammable R/C remotes only; **autonomously controlled robots will be disqualified.** A bill of materials for the Urban Search & Rescue Challenge Kit and a list of approved optional parts and raw materials can be found in the Appendix.

Challenge Checklist

- ☐ 1. Purchase robot challenge kit.
- ☐ 2. Thoroughly review Team Guide, scoring rubrics, and *TETRIX® Builder's Guide*.
- ☐ 3. Design and build robot and arm mechanism within specifications that is capable of grabbing, holding, and moving objects. Document process and blueprints in Engineering Notebook.
- ☐ 4. Practice driving robot on various types of terrain while looking at a video monitor displaying the feed from the onboard camera.

© 2012-15 Pitsco Education • Robotics: Urban Search & Rescue Challenge

- ☐ 5. Review basic mechanical, robotics, and electrical knowledge in preparation for written test.
- ☐ 6. Plan, prepare, and practice presentation.
- ☐ 7. Attend local, regional, state, and national Urban Search & Rescue Challenge competitions.

Sample Event Agenda

Following is a sample agenda for an Urban Search & Rescue Challenge event.

1. **Orientation and Testing:** Teams will bring robots for inspection and Engineering Notebooks for judging. The written test will be administered (30-minute limit for written test).
2. Robot and Engineering Notebook **inspection** by judges (items then returned to teams)
3. The following can be done simultaneously if the number of event personnel permits:
    - Teams complete **technical presentation** (oral and physical) over robot, Engineering Notebook, and arm mechanism (following presentation, items will remain in judges' possession until challenge field competition).
    - Final robot and arm mechanism **inspection** by judges
4. **Lunch**
5. Challenge field **competition** conducted

Contest Guidelines/Rules

Note: Guidelines and rules are subject to change.

- Each **team** must be composed of two members.
- Each robot must have an **identification label** with the team's number listed.
- Each **technical presentation** should last from 10 to 15 minutes and should be primarily oral, with supporting materials of printed or electronic media and physical models. Students should be prepared to discuss the roles they played, their robot design, and the functions of their robot. (**Note:** The Technical Committee will **not** provide projector, screen, or other presentation equipment.)
- **Before attending** the competition, team members should design, build, and experiment with robots constructed from the SkillsUSA Urban Search & Rescue Challenge Kit. Additional TETRIX or other approved parts and raw materials (see Appendix) may also be used. The prebuilt robot and arm mechanism will be required to grab, hold, and move objects during the mission.

© 2012-15 Pitsco Education • Robotics: Urban Search & Rescue Challenge

- The robot's arm mechanism must be capable of opening a standard-size mailbox and reaching **into the box up to five (5) inches**, grabbing the simulated ordnance, and pulling it out of the mailbox. The arm mechanism must be capable of reaching items positioned **up to nine (9) inches above the floor**. **Note:** View the positioning of the ordnance on the mailbox lids in images shown in Appendix D.

- The simulated ordnances (wooden block below, left) are not included in the competition kit and are **approximately 2.7 inches cubed**. The handles on doors and mailboxes (below, right) are **3.3 inches long and .41 of an inch wide**.

Ordnance (wooden block)

Mailbox handle

- **Part Restrictions:**
    - Limit of **four** continuous rotation DC motors or servo motors per competing robot
    - Limit of **four** standard-scale proportional servo motors or equivalent
    - Maximum of **one** R/C transmitter (non-programmable, **up to six channels**) and **one** DC motor controller (**Note:** To avoid radio interference issues, Urban Search & Rescue teams must use the 4-channel Futaba 2.4 GHz R/C control system included in the Urban Search & Rescue Challenge Kit, though up to 6 channels are allowed.)
    - One **rechargeable battery pack** for drivetrain motor power, maximum 12V. One battery pack for R/C receiver and/or servo power, maximum 6V. One battery operated wireless camera, maximum 9V. The teams may use either the supplied video monitor in the command center or their own display device to view the video feed from their camera. The camera must be mounted to the robot. Any other battery-operated components installed on the robot must use one of the above-listed power sources.
    - Robot must fit into an **18" x 18" x 18"** space when starting **but may be expanded to a larger size during the challenge**.

- Each team must provide in its Engineering Notebook a **technical drawing or blueprint** detailing the construction of its robot drive chassis and additional drawings/blueprints for its associated arm mechanism.

- The robot and arm mechanism must be **assembled by the team prior to the competition**.

© 2012-15 Pitsco Education • Robotics: Urban Search & Rescue Challenge

- All robots will be required to **pass inspection** by judges to determine if all of the parts used are from the list of allowed parts. Any team whose robot fails inspection will be given 10 minutes to correct the infraction, after which the robot will be disqualified if proper modifications have not been made.
- Robots will not be allowed to compete with an arm mechanism that poses **danger** to competitors or could potentially cause damage to the challenge field.
- Accuracy of the robot's **construction matching the blueprint** will be considered during scoring. All necessary parts and tools for construction must be brought to the competition site.
- Team members will be required to follow proper safety procedures and use eye protection.
- Teams may bring a **laptop computer and blueprint drawings** of their robot and arm mechanism designs to the contest building area for use only as reference tools. A description of the assembly process is required with the Engineering Notebook. The designs also may be printed or hand-drawn copies.
- Teams **may view the simulated neighborhood** prior to the beginning of competition and may watch other competing teams during the challenge event.
- **Final team results** will be posted at the conclusion of the event, and each team will receive a copy of the **judges' rubrics** with scores and comments about the team's performance.

Engineering Notebook

The Engineering Notebook (example information on pages 24-25) will be submitted for judging at check-in. Required elements:

- Overall neat and professional appearance
- A complete bill of materials for the robot drive chassis and arm mechanism designed and used in competition at the event
- A description of the assembly process for the robot drive chassis and arm mechanism
- Illustrations, sketches, photos, and written log entries accurately documenting the design and prototyping iterations detailing the evolution and logical progression of the robot's design

Challenge Course Rules

Note: Team members must wear safety glasses at all times while they are in the competition area! All teams will be expected to adhere to the official rules for the Urban Search & Rescue Challenge competition and compete in a positive and professional manner.

© 2012-15 Pitsco Education • Robotics: Urban Search & Rescue Challenge

- At the competition site, the **simulated residential area** will be provided and maintained by the technical committee. During competition, the course will be reset to its original state before each team competes. The ordnance pieces will be randomly placed before each team competes.
- The Urban Search & Rescue Challenge: Explosive Ordnance Disposal event will consist of **a single timed mission** for each team. During the mission, the robot has up to six minutes to navigate the course, complete the challenge, and return to home base.
- Each team will **operate its mobile robot via R/C** and navigate by line of sight and by the video feed from an onboard wireless camera. The command center will be within view of the playing field, and team members must remain seated at the command center while competing.
- An official will be in charge of placing the team's robot at the starting point on the challenge course. (**Reminder:** The robot must fit within an 18" x 18" x 18" space at the start but **may expand to any size after it enters the neighborhood**.)
- After a "clear" signal is issued by a challenge course official, **time will begin** as soon as the robot moves. Following completion of a mission, **time will stop** upon successful return to home base following disposal of two simulated explosive ordnances.
- Robots should remain on roads and paths within the neighborhood in order to avoid property damage. Shortcuts are not allowed and will result in penalties.
- The mission will last a **maximum of six minutes**.
- Team members are **not allowed to touch** their robot at any time while a mission is in progress, unless instructed to do so by a judge.
- The **containment unit** where the ordnance pieces are placed by the robot after removal from the course must remain outside of the field of play and as close to the starting position as possible. Any team that deliberately moves the containment unit from its starting point may be disqualified.
- An official will award points for the team's mission based on the official **"Challenge Field Skills" rubric**. The team ranking for the total time to complete the mission will be used to determine bonus points within the rubric.

Penalties

- A deduction (see rubric in Appendix) will be assessed each time an ordnance is dropped. If necessary, and at the request of a team member, a course official will set the ordnance upright so that the team can continue its mission.

© 2012-15 Pitsco Education • Robotics: Urban Search & Rescue Challenge

- All **parts** except nuts and bolts must remain attached to the robot for the duration of the mission.
- Each time the **robot stalls or becomes hung up** and has to be freed by officials, a deduction will be assessed. An official will free a robot at the request of a team member.
- A deduction will be assessed whenever a robot goes off the designated path within the neighborhood or **outside of the course boundaries**. **Shortcuts are not allowed**.

Standards & Competencies

RR 1.0 Demonstrate knowledge in safety rules and practices
1.1 Maintain a safe work area.
1.2 Demonstrate safe and correct use of hand tools.
1.3 Follow safety rules during robotic assembly.
1.4 Demonstrate safe operation of robotic equipment in tele-op mode.

RR 2.0 Produce technical documentation
2.1 Keep an engineering notebook detailing design discussions, design details, design changes, and troubleshooting notes.
2.2 Develop a technical drawing of the final competitive robot design.
2.3 Produce a bill of materials for the final competitive robot design.
2.4 Explain design choices and changes made within the engineering design process.

RR 3.0 Demonstrate knowledge of robot parts
3.1 Identify mechanical and electrical parts of the final robot design.
3.2 Demonstrate understanding of the mechanical and electrical functions of the parts of the final robot design.

RR 4.0 Demonstrate understanding of robot mechanical systems
4.1 Identify mechanical systems within the final robot design.
4.2 Demonstrate the function of control systems of the final robot design.
4.3 Demonstrate and explain the functioning of the drivetrain of the robot.
4.4 Demonstrate and explain the functioning of the package delivery system of the robot.

RR 5.0 Demonstrate understanding of robot electrical systems
5.1 Identify electrical/electronic systems within the final robot design.
5.2 Demonstrate and explain the function of electrical control systems of the final robot design.

RR 6.0 Demonstrate tele-op skills and real-time problem solving

© 2012-15 Pitsco Education • Robotics: Urban Search & Rescue Challenge

6.1 Demonstrate ability to safely and quickly maneuver the robot through rough and unknown terrain via tele-op.
6.2 Demonstrate ability to overcome challenging areas of course terrain via tele-op.
6.3 Demonstrate ability to locate objects through remote robotic manipulation via tele-op.
6.4 Demonstrate ability to transport objects via tele-op.

RR 7.0 Demonstrate ability to present and explain technical information
7.1 Demonstrate correct and effective use of oral, written, and technological tools to present technical information regarding engineering design process, robot construction, and robotic tele-op control.
7.2 Demonstrate knowledge of design choices and implementations during the engineering design process.
7.3 Demonstrate knowledge of team processes and individual team member contributions.

Committee-Identified Academic Skills

Math Skills

- Students use fractions in contextual applications to solve problems.
- Students use percentages in contextual applications to solve problems.
- Students solve problems through the contextual application of proportions.
- Students measure time, distance, and angles within contextual problem-solving applications.
- Students simplify numeric expressions.
- Students use comparisons, predictions, and inferences in analyzing data to solve a problem.
- Students utilize modeling techniques to solve problems.
- Students write and solve algebraic expressions in one or more variables.
- Students use derived measurements to solve problems.

Science Skills

- Students apply the scientific method to plan and conduct experiments.
- Students apply knowledge of heat, sound, mechanical, chemical, electrical, and light energy within contextual problem-solving applications.
- Students apply knowledge of kinetic and potential energy in contextual applications to solve problems.
- Students apply knowledge of Newton's laws of motion to solve problems.
- Students apply knowledge of simple and compound machines to solve problems.
- Students apply knowledge of gears, motors, and linkages to solve problems within contextual applications.
- Students use formulas to solve problems.
- Students apply scientific knowledge within the engineering design process.
- Students apply knowledge of force and motion concepts in contextual problem solving.

© 2012-15 Pitsco Education • Robotics: Urban Search & Rescue Challenge

Engineering Skills

- Students apply the engineering design process to solve a contextual problem.
- Students apply the principles of circuit analysis.
- Students apply the elements of circuit design and construction.
- Students understand and apply energy and power types, sources, and conversions.
- Students apply methods of maintaining, servicing, troubleshooting, and repairing systems.
- Students apply skills and techniques related to building, repairing, and maintaining robotic mechanisms.
- Students apply techniques and technologies related to the production of technical drawings.
- Students apply basic mechanical skills related to robotic design, construction, and troubleshooting.
- Students understand and apply knowledge of safety during construction and use of equipment.
- Students apply problem-solving and engineering-design processes to solve unforeseen challenges.

Language Arts Skills

- Students make effective use of spoken, written, and visual communications with team members within the problem-solving and engineering-design processes.
- Students make effective use of spoken, written, and visual communications with a variety of audiences.
- Students use appropriate information resources within the research-and-design process.
- Students organize and synthesize information for use in research-and-design processes and in formal presentations.
- Students demonstrate the ability to correctly read and interpret rules, instructions, and specifications within the robotic challenge.
- Students demonstrate the proper use of language, both written and verbal.

© 2012-15 Pitsco Education • Robotics: Urban Search & Rescue Challenge

Scoring Rubrics

Urban Search & Rescue Challenge – Possible Points: 200 **Team: _____**

Robot Drive Chassis & Technical Drawing

Objective	Points Performance Level					Points
	5	10	20	30	40	
Design, construction, and durability of power drive-system assembly (gears, chain, sprocket, wheels, treads)	Drive-system assembly is poorly designed or constructed and lacks durability.	Drive-system assembly demonstrates adequate design, construction, and durability.	Drive-system assembly demonstrates average design, construction, and durability.	Drive-system assembly demonstrates above-average design, construction, and durability.	Drive-system assembly demonstrates excellent design, construction, and durability.	
Electrical components installation and wire management	Poor effort given to wire routing and safety management.	Minimal effort given to wire routing and safety management.	Average effort given to wire routing and safety management.	Above-average effort given to wire routing and safety management.	Excellent effort given to wire routing and safety management.	
Basic driving performance test (FWD, REV, turn right, turn left)	Robot chassis does not function in any capacity when demonstrated.	Robot chassis powers up but performs only one basic control function.	Robot chassis powers up but performs only two basic control functions.	Robot chassis powers up but performs only three basic control functions.	Robot chassis powers up and performs all four basic control functions.	
Technical drawing quality	Drawing detail and quality are inferior.	Drawing detail and quality are adequate.	Drawing detail and quality are average.	Drawing detail and quality are above average.	Drawing detail and quality are excellent.	
Accuracy of technical drawing to assembled drive train	Technical drawing does not match assembled drive train.	Technical drawing matches few components of the assembled drive train.	Technical drawing matches major components of the assembled drive train.	Technical drawing matches all major and most minor components of the assembled drive train.	Technical drawing matches all major and all minor components of the assembled drive train.	
					Total:	

Judge's comments:

© 2012-14 Pitsco Education • Robotics – Urban Search & Rescue Challenge

Urban Search & Rescue Challenge – Possible Points: 150 **Team: _____**

Arm Mechanism

Objective	Points Performance Level					Points
	10	20	30	40	50	
Performance test of arm mechanism	Arm mechanism does not function in any capacity.	Arm mechanism functions unreliably and is poorly engineered.	Arm mechanism functions satisfactorily but lacks engineering efficiency.	Arm mechanism functions well and is moderately engineered.	Arm mechanism functions reliably and is well constructed and engineered.	
Arm stability and clearance to robot drive chassis	Arm is not stable and does not clear the robot drive chassis at all points.	Arm is not stable but clears the robot drive chassis at all points.	Arm is stable but does not clear the robot drive chassis at all points.	Arm is stable and clears the robot drive chassis at all points.	Arm is very secure and clears the robot drive chassis at all points.	
Appropriateness of arm end effector to size and weight of ordnance	Ordnance does not fit into arm end effector with sufficient freedom to allow transport and disposal.	Ordnance fits into arm end effector with sufficient freedom to allow transport, but device lacks the ability/strength to effectively dispose of the ordnance.	Ordnance fits into arm end effector with sufficient freedom to allow transport and has minimal ability/strength to effectively dispose of the ordnance.	Ordnance fits into arm end effector with sufficient freedom to allow transport and has adequate ability/strength to effectively dispose of the ordnance.	Ordnance fits into arm end effector with sufficient freedom to allow transport and exceeds the amount of ability/strength to effectively dispose of the ordnance.	
					Total:	

Judge's comments:

© 2012-15 Pitsco Education • Robotics: Urban Search & Rescue Challenge

Urban Search & Rescue Challenge – Possible Points: 150 **Team: _____**

Engineering Technician Notebook

Objective	Points Performance Level					Points
	10	**20**	**30**	**40**	**50**	
Overall content format and appearance	Notebook did not follow mission format/guidelines or demonstrate understanding of task.	Notebook adequately follows some, but not all, of the mission format/guidelines and demonstrates understanding of task.	Notebook adequately follows mission format/guidelines and demonstrates understanding of task.	Notebook meets the mission format/guidelines and demonstrates understanding of task.	Notebook is outstanding and goes above and beyond format/guidelines and demonstrates understanding of task.	
Logical structure and documentation	Team did not document the project in a satisfactory manner.	Team adequately documents project but lacks logical flow and structure of project from start to finish.	Team completed documentation, flow, and structure in an average manner, but more could have been done.	Team documented the project "journey" with good flow and structure from beginning to end.	Team's documentation of project demonstrates an effort that goes above and beyond.	
Technical accuracy and bill of materials	Technical content (descriptions, sketches, drawings, tables, and figures) does not match robot project build.	Technical content (descriptions, sketches, drawings, tables, and figures) matches robot project build in a satisfactory manner.	Technical content (descriptions, sketches, drawings, tables, and figures) adequately matches robot project build.	Technical content (descriptions, sketches, drawings, tables, and figures) matches robot project build.	Technical content (descriptions, sketches, drawings, tables, and figures) matches robot project build with outstanding detail and clarity.	
					Total:	

Judge's comments:

© 2012-15 Pitsco Education • Robotics: Urban Search & Rescue Challenge

Urban Search & Rescue Challenge – Possible Points: 150 **Team: _____**

Technical Presentation

Objective	Points Performance Level					Points
	10	**20**	**30**	**40**	**50**	
Explanation of mechanical systems within the robot	Demonstrates little knowledge of mechanical parts and their functions.	Demonstrates minimal knowledge of mechanical parts and their functions.	Demonstrates adequate knowledge of mechanical parts and their functions.	Demonstrates a working knowledge of mechanical parts and their functions within the mechanical system.	Demonstrates a thorough knowledge of mechanical parts and their functions within the mechanical system.	
Explanation of electrical systems within the robot	Demonstrates little knowledge of electrical parts and their functions.	Demonstrates minimal knowledge of electrical parts and their functions.	Demonstrates adequate knowledge of electrical parts and their functions.	Demonstrates a working knowledge of electrical parts and their functions within the electrical system.	Demonstrates a thorough knowledge of electrical parts and their functions within the electrical system.	
Description of design challenges and solutions implemented for the robot	Demonstrates little knowledge of design challenges faced or solutions implemented.	Demonstrates minimal knowledge of design challenges faced and solutions implemented.	Demonstrates adequate knowledge of design challenges faced and solutions implemented.	Demonstrates a working knowledge of design challenges faced and solutions implemented.	Demonstrates a thorough knowledge of design challenges faced and solutions implemented.	
					Total:	

Judge's comments:

© 2012-15 Pitsco Education • Robotics: Urban Search & Rescue Challenge

Urban Search & Rescue Challenge – Possible Points: 250 **Team: _____**

Challenge Field Skills

Objective	Points Performance Level						Points
	50	**100**	**150**	**170**	**200**	**Time**	
Challenge Course Mission: Ordnance retrieval and containment	Robot became disabled on the course and could not continue.	Robot found at least one of the ordnances but was unable to retrieve and dispose of it.	Robot was able to retrieve and dispose of one of the ordnances.	Robot was able to retrieve and dispose of both of the ordnances, but not within the allotted time.	Robot was able to retrieve and dispose of both of the ordnances within the allotted time.		

Point Deduction Worksheet

Infraction	Number of Incidents	Points to Deduct
Loss of ordnance (5 points per incident)		
Vehicle stalled (5 points per incident)		
Robot intentionally outside of boundaries (25 points per incident)		
Deduction Total (insert into main scoring rubric)		

Total Time		
1st Place Time . . . . . 50 points Top 25% of times . . . . . 30 points 26% to 50% of times . . . 10 points **Time Bonus**		
Challenge Field Points (subtotal)		
Deduction Total (from Point Deduction Worksheet)		
Challenge Field Point Total		

Judge's comments:

© 2012-15 Pitsco Education • Robotics: Urban Search & Rescue Challenge

Urban Search & Rescue Challenge – Possible Points: 100

Team: _____

Written Test

Topical Area	Number of Questions	Points Possible per Question	Points Possible	Points Scored
Terminology	**7**	**5**	**35**	
Mechanisms	**8**	**5**	**40**	
General Robotics (including Asimov's Laws of Robotics)	**5**	**5**	**25**	
			Total:	

Judge's comments:

© 2012-15 Pitsco Education • Robotics: Urban Search & Rescue Challenge

Team: _____

Urban Search & Rescue Challenge **Total Possible Points: 1,000**

Category	Possible Points	Points Scored	Judge's Comments
Robot Drive Chassis & Technical Drawing	200		
Arm Mechanism	150		
Engineering Technician Notebook	150		
Technical Presentation	150		
Challenge Field Skills	250		
Written Test	100		
Team Total:	**1,000**		

© 2012-15 Pitsco Education • Robotics: Urban Search & Rescue Challenge

Appendix

(A) Urban Search & Rescue Challenge Kit

Urban Search & Rescue Challenge Kit Bill of Materials	
Item	**Quantity**
4" Wheel	6
16T Sprocket	4
24T Sprocket	6
32T Sprocket	2
Chain w/Link	1
Chain Breaker	1
Gear Hub Spacer	10
100 mm Axle	12
DC Drive Motor	2
Motor Mount	2
Axle Set Collar	12
288 mm Channel	6
160 mm Channel	4
96 mm Channel	4
32 mm Channel	6
L Bracket	6
Flat Building Plate	2
Flat Bracket	6
2" Standoff Post	12
1" Standoff Post	12
180 Servo	2
Single Servo Bracket	2
Bronze Bushing	24
Axle Hub	12
Motor Hub	2
1/8" Axle Spacer	24
3/8" Axle Spacer	6
Motor Power Cable	2
On/Off Switch	1
12-volt TETRIX Battery	1
Motor Speed Controller	1
1/2 SHCS	200
Hex Keys	1
Zip Tie Pack	20
Kep Nut	200
3/8" BHCS	50
NiMH Battery Charger	1
4ch R/C Controller	1
288 mm Flat Bar	4
Servo Pivot w/Bearing	1
80T Gear	2
40T Gear	2
Electronics Deck	1
Green Bin	1
Lid	1
Top Card	1
Side Label Sticker	1
TETRIX® Builder's Guide	1

Camera Pack (required)	
Item	**Quantity**
900 MHz Camera	1
9-volt Adaptor	1
Camera Mount	1

Control System	
Item	**Quantity**
2.4 GHz 4ch R/C Controller	1

Additional parts and raw materials legal for use:

- TETRIX Building System parts (http://www.pitsco.com/Robotics_Urban_Search_and_Rescue_Challenge_Kit, 800-835-0686, or akirby@pitsco.com)
- Other robot parts similar in size and design to Urban Search & Rescue Challenge Kit materials
- (1) 12" x 24" sheet of acrylic plastic, maximum thickness of 0.250"
- (1) 12" x 24" sheet of aluminum, maximum thickness of .080"
- Raw material used for fabricating custom robot parts

© 2012-14 Pitsco Education • Robotics – Urban Search & Rescue Challenge

(B) Command Center

- (1) Six-foot table or equivalent
- (2) Chairs
- (1) Video monitor connected to 900 MHz camera receiver (camera and receiver included in Urban Search & Rescue Challenge Kit)
- Access to a 120-volt electrical outlet

Urban Search & Rescue Command Center

© 2012-15 Pitsco Education • Robotics: Urban Search & Rescue Challenge

(C) Engineering Journal

Engineering Journal Worksheet

Objectives	Achievements	Issues and Concerns

Create a rough sketch of your robot. Create a legend with symbols for specific components of your robot, such as sensors and motors.

	Legend

© 2012-15 Pitsco Education • Robotics: Urban Search & Rescue Challenge

Engineering Journal Worksheet

Explain the testing that was done with the robot you created to make sure it could perform your objectives.

If the robot could not perform all of your objectives, what steps did you take to redesign the robot so that it could complete the exercise?

Describe what technical skills you learned in this activity? (For example: building, wiring, designing)

Describe the nontechnical skills you have learned in this activity? (For example: teamwork, communication)

From your experiences in building this robot, list some ideas for other robots, or for modifications to this robot. Please include what objectives would be met with the new designs, and what steps would need to be taken to meet those objectives.

© 2012-15 Pitsco Education • Robotics: Urban Search & Rescue Challenge

(D) 2014 Challenge Field

© 2012-15 Pitsco Education • Robotics: Urban Search & Rescue Challenge

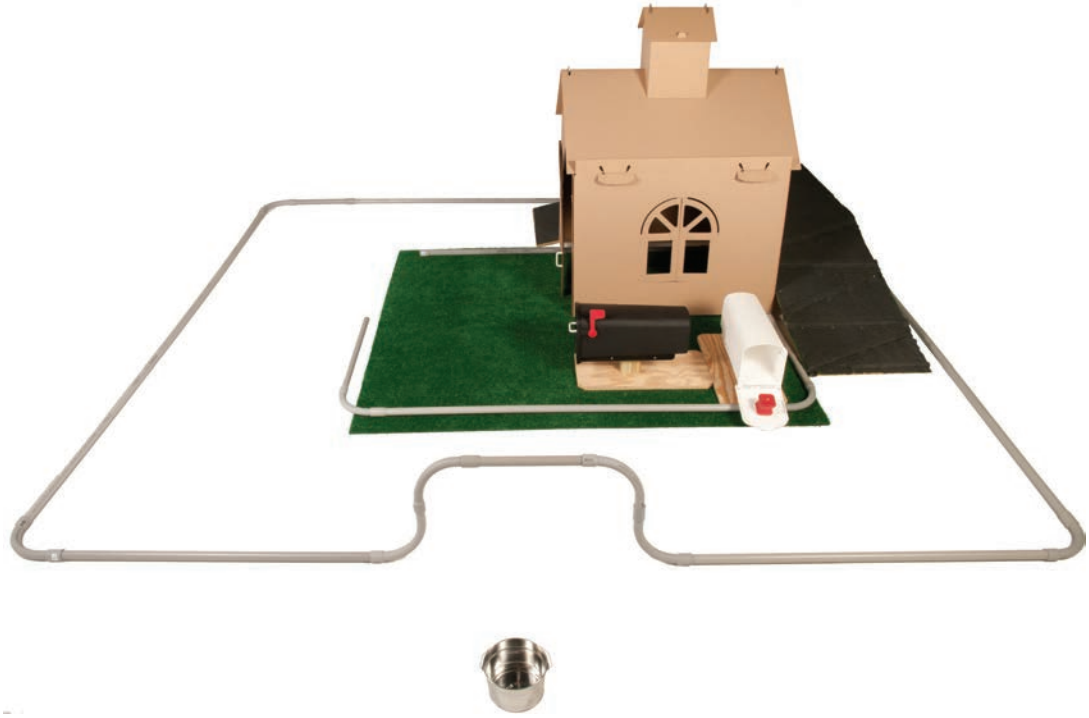

© 2012-15 Pitsco Education • Robotics: Urban Search & Rescue Challenge

INTERVIEW QUESTIONS

In general, put the team at ease – ask their names, what grades they are in, and other small talk. Watch to see if all questions are answered by one team member or if both team members are knowledgeable and engaged in answering the questions.

1. What and where is the main power source for your robot?
2. How do you turn your robot off and on? *If needed, follow up with:*
    a. Why are there two switches – what do they control?
    b. Are there separate power sources for the robot? Please explain.
3. In your own words, describe the process that occurs when you move the joystick to move your robot forward.
4. How does your gripper work?
5. How did you arrive at this design?
6. Describe how you worked as a team in this competition.
7. What skills did you have to use for this competition?
8. What is the most unique part of your robot?
9. What modifications would you make to your robot at this point?
10. What was the biggest challenge you faced in designing or constructing your robot?

ROBOTICS: URBAN SEARCH + RESCUE

SkillsUSA
2015 Contest Projects

Screen Printing Technology

Click the “Print this Section” button above to automatically print the specifications for this contest. Make sure your printer is turned on before pressing the button.

SkillsUSA

National Leadership and Skills Conference

Screen Printing Technology Performance Testing Plan

June 24-25, 2015

SkillsUSA 2015
Screen Printing Technology Performance Test Plan

Kentucky Exposition Center
South Wing A
Louisville, Kentucky

June 24-25, 2015

General Information
For
Technical Committee Members
Judges
State SkillsUSA Directors
Screen Printing Instructors
And
Contestants

SkillsUSA 2015
Screen Printing Technology

Table of Contents 3
I. Organizational Structure 4
II. Contacts (See front page of the Appendix) 5
III. Judges and Time Keepers Directory 6-8
IV. Judges Information 9
V. Contestant Information Sheet 10
VI. Scope of the Test 11-13
VII. Screen Preparation (Tensioning)
A. Inspect and Tension Assignment 14
B. Inspect and Tension Checklist 15
VIII. Screen Coating
A. Screen Coating Assignment 16
B. Screen Coating Inspection Worksheet 17
IX. Screen Exposure and Washout
A. Exposure and Washout Assignment 18
B. Exposure and Washout Checklist 19
X. Screen Blockout
A. Screen Blockout Assignment 20
B. Screen Blockout Checklist 21
IX. Image Registration
A. Image Registration Assignment 22
B. Image Registration Checklist 23
X. Image Printing
A. Image Printing Assignment 24
B. Image Printing Checklist 25
XI. Screen Reclaiming
A. Screen Reclaiming Assignment 26
B. Screen Reclaiming Checklist 27
XII. Quality Control Problem
A. Q. C. Problem Assignment 28
B. Q. C. Problem Worksheet 29-30
XIII. Written Test Assignment and Cover 31-32
XIV. Oral SkillsUSA Assessment
A. Oral Assessment Assignment 33-34
B. Oral Assessment Checklist 35
XV. Helpful Hints 36
XVI. Meeting Agenda 37
XVII. Industry Awards 38
XVIII. Testing Schedule
A. Wednesday Schedule 39
B. Floor Plan 40
C. Thursday Schedule 41
XIX. Appendices
A. Performance Test Inventories 42-43
B. Image Registration Specifications 44-45
C. Image Printing Image Specifications 46-47
D. Screen Printing Scoring Criteria 48

SkillsUSA 2015
Screen Printing Technology
Organizational Structure

I. Performance Test Chair and Co-Chair Responsibilities
   A. Coordinates details of organization.
   B. Reviews floor plans for performance test.
   C. Coordinates acquisition of equipment and supplies.
   D. Identifies and appoints judges.
   E. Assigns local committee members a list of needed supplies to have on hand on the day of the performance test: staples, pencils, marking pens, paper, and other consumable items.
   F. Arrange for security of performance testing area the evening before the day of the competition.

II. Technical Committee Responsibilities
   A. Selects competencies to be tested.
   B. Develops rating sheets.
   C. Completes preliminary instructions (scenario) and information sheets.
   D. Determines number of judges needed.
   E. Obtains names and addresses of judges.
   F. Determines materials, supplies, tools, and equipment needs for the performance test and identifies probable sources.
   G. Prepares a complete set of instructions in the form of scenarios.
   H. Determines the layout for the performance test area.
   I. Sets a time schedule for contestants.

III. Education Committee Responsibilities
   A. Work with the technical committee to protect the validity of the performance test.
   B. Reviews performance test content for accuracy and relevancy.

IV. Judges Responsibilities
   Judges must attend an orientation session prior to the start of the performance test. Contestants should be allowed to become familiar with the competency testing station with regard to the instructions in the performance test scenario.

SkillsUSA 2015
Screen Printing Technology
Judges Responsibilities

1. Judges must be completely familiar with the *SkillsUSA Championships Technical Standards*, particularly the General Regulations, Instructions to Technical Committee Chairs, and the specific rules to the contest they have been asked to judge.
2. Judges should receive copies of the contest project and judges' rating sheet(s), along with complete instructions from the technical committee chair prior to the competition.
3. Members of the SkillsUSA Championships technical committee may not serve as judges unless approved by the SkillsUSA Championships director.
4. Judges must give careful attention to each rule, and each contestant or entry must be judged in exactly the same manner and under the same conditions as every other contestant or entry.
5. Judges will meet prior to the SkillsUSA Championships, at a time and place announced by the SkillsUSA Championships technical committee chair to confer on:
   a. Rules meanings and interpretations
   b. Room arrangements
   c. Materials and equipment
   d. Last-minute details
   e. Rating sheets
6. Judges will evaluate the performance of each contestant according to criteria listed for each contest.
7. Judges will **identify contestants by number only.** Judges will not use contestants' names, schools or state unless otherwise specified in individual contest rules.
8. Judges may attend the contest orientation meeting held prior to the opening of the SkillsUSA Championships. However, **only members of the technical committee** may instruct the contestants and verify attendance.
9. Judges are selected because of their recognized expertise in the trade or skill that they are being asked to judge and are asked to follow the official SkillsUSA rules without inserting personal opinions. Such things as length of hair, length of dress and style of shoe, unless specifically covered in the contest regulations, are not to be considered by the judges except where safety is considered.
10. In no instance are judges or contest chairs authorized to change the contest rules. If an interpretation is required, the chair should contact the SkillsUSA Championships director.
11. Judges are to evaluate all items related to safety. Contestants not meeting safety requirements in clothing and/or devices may be disqualified from competition if, in the judges' opinions, the safety of the contestants or those around them is endangered.
12. Judges should **rate contestants on the basis of entry-level job skills.** Judges should **rate each contestant independently and not compare rating sheets with those of other judges.**
13. Judges should rate contestants against a standard of performance rather than automatically awarding first-, second-, or third-place medals to the highest-ranking competitors. **It is not necessary to award a medal if the standard of performance does not justify such recognition.**
14. After the judging is completed, judges should **total their own rating sheets** and return them, along with any notes and other pertinent information, to the SkillsUSA Championships technical committee chair.
15. The judges and technical committee members will **keep all results confidential until the general announcement of winners is made at the Awards Ceremony.** Under no circumstances may judges discuss contest results or contestants' performance with contestants, chapter advisors or any observer.
16. Judges should refer all contest inquires or problems that arise to the SkillsUSA technical committee chair.

In keeping with a tradition of respect for the individuality of our members and our role in work force development, SkillsUSA strives to ensure inclusive participation in all of our programs, partnerships and employment opportunities.

SkillsUSA 2015
Screen Printing Technology
Contestant Information Sheet

A. Purpose
To rate a screen-printing contestant's preparation for employment and to recognize outstanding contestants for excellence and professionalism in the field of graphic imaging.

B. Clothing Requirements
Established by the SkillsUSA general contest requirements.
An apron or smock is optional.
Contestants should consider safety glasses with side shields, ear protection and latex gloves in some of the operational areas such as screen reclaiming.

C. Eligibility
Open to all active SkillsUSA members enrolled in technical education programs that teach graphic communications skills.

D. Tools
The technical committee will provide the tools needed at each competency testing station.
Contestants may use rulers, rags, optical devices, markers and other items that they feel will enhance their performance.

E. The SkillsUSA Screen Printing Technology Scorecard lists items that will not be evaluated during the current competition.
These items are as follows:
1. Screen Blockout
2. Screen Reclaiming
Therefore, the points for each of these evaluation items will be recorded on the Screen Printing Technology Scorecard for every Screen Printing Technology Contestant.
The Assignment and Rating Sheets for these performance-testing areas are included in this Performance Test Plan. The sheets have been included in this plan because Graphics Communications Students and Instructors may wish to refer to these sheets at some **future** time when screen printing performance testing procedures are needed at a local, district, state or **National Competition**.

SkillsUSA 2015
Screen Printing Technology

Scope of the Test

I. Contestants will demonstrate their abilities to perform the duties and tasks that pertain to the following list of items that may be evaluated. The precise number of duties and tasks required for a competent performance of a screen-printing process will be determined by the Screen Printing Technology Technical Committee with **the level of skill** left to the professional judgment of the Screen Printing Technology Judges.
   A. Screen Preparation (Inspection & Tensioning)
   B. Screen Coating
   C. Screen Exposure & Washout
   D. Screen Blockout
   E. Image Registration
   F. Image Printing
   G. Screen Reclaiming
   H. Quality Control Problem
   I. Written Knowledge Test
   J. Oral Professional Assessment

II. This list of items that may be evaluated is taken from the Screen Printing Technology Scorecard. As listed on the Screen Printing Technology Scorecard each of the ten evaluation items listed above have an attending number of possible points. Performance testing station checklists may generate points in more than one of the ten evaluation areas. (Example: Image Registration and Image Printing will test some of the same screen-printing skills. The testing of these identical skills will contribute points to a composite score on the Screen Printing Technology Scorecard.)

   A. Screen Preparation, Inspection & Tensioning
      Inspect screens entering production.
      Check screen tension with a tension meter and re-tension if needed
   B. Screen Coating
      Select and prepare emulsion scoop
      Fill emulsion scoop coater
      Evaluate screen for acceptable tolerances
      Coat screen with emulsion
      Place coated screen in a screen dryer

C. Screen Exposure and Washout

Select the **red** film positive from an art file
Inspect the film positive for dirt and marks
Obtain a screen coated with emulsion from screen dryer
Inspect and protect screen from excess light
Center **red** film positive on screen **6** 1/4 inches from frame bottom
Secure the film positive to the screen
Place screen and film positive on an exposure unit
Expose screen
Remove film positive
Washout the unexposed emulsion on a screen to create an image stencil
Remove excess water
Dry screen

D. Screen Blockout

Evaluation of this item at the state level is optional. It will be not be evaluated at the national level in 2015.

Use blockout fillers and tape to cover areas on the screen where plastisol could be printed on the image in an area that would produce a shirt that could not be sold to a customer.

E. Image Registration

Place screen on the press
Coarse register to image printed at this press station (Note do not remove the blockout tape from the registration marks)
Check shirt boards for proper adhesion
Select adhesive by type
Apply adhesive to shirt boards for proper adhesion
Inspect contact side of screens for excess ink
Test screen off contact
Print test image on a rag or other substrate to check for correct registration
Fine register to image printed at this press station
Print proof image on two shirts
Place shirts in dryer

F. Image Printing

Check shirt boards for proper adhesion
Select adhesive by type
Apply adhesive to shirt boards for proper adhesion
Inspect contact side of screens for excess ink
Inspect all screens for off contact
Check ink supply on each screen
Check registration of all screens
Squeegee selection and inspection for hardness and damage
Print image on shirts
Place shirts in dryer

G. Screen Reclaiming

Evaluation of this item at the state level is optional. It will be not be evaluated at the national level in 2015.

Remove excess ink
Remove block-out filler and tape
Apply emulsion remover
Blow out emulsion with high pressure hot water
Use scrub brush where needed
Use environmentally safe chemicals and procedures

H. Quality Control Problem

Study technical specifications contained in the Tech Pack
Study the quality assurance worksheet scenario and inspection steps
Inspect a quality assurance sample of five garments

I. Written Test

Answer a minimum of 25 multiple-choice screen-printing technology questions.
Complete the test in the allotted fifteen (15) minutes

J. Oral Professional Assessment

Communicate in a job interview setting, which requires technical knowledge, career objective, professional judgment, and courtesy.

III. When a contestant has completed an assigned job the contestant is to be seated in the chair provided at that testing station to stop the time. After the judge and timekeeper have completed rating the contestant's performance and procedure the contestant will be notified. The judge will gather the completed project and rating form and submit it to the scorekeeper for tabulation and posting on a **Screen Printing Technology Scorecard**.

Each contestant will work independently without assistance from judges, instructors, fellow contestants, or observers. Such assistance may result in the contestant being disqualified.

IV. Contestants should perform minor testing station maintenance: such as clean up, tool and materials placement. Testing station maintenance is an item that will be evaluated by testing station judges.

SkillsUSA 2015
Screen Printing Technology
Screen Preparation

Screen Inspection and Tensioning Assignment

Objective:
Inspect and test three retentionable screens with stencils that are reentering production from storage. This inspection is made to determine if company production standards are being met.
Special attention is given to screen four's tension in preparation for coating. Tension tolerances are specified in a performance test scenario written at top of the screen preparation **(tensioning)** station checklist.
Note: Screen mesh tension must not vary more than plus or minus 5 Newtons at screen's center.

Caution: Do not continue to tighten screws that are crooked or jammed. A jammed screw on any frame corner will prevent completion of the tensioning process and result in zero (0) points for this portion of your Screen Printing Technology Performance Test.

Screen inspection and tension testing instructions:
1. Obtain Screen Preparation (Inspection and Tension) Checklist from the station timekeeper.
2. Read the scenario written on the checklist.
3. Move to inspection and tension testing station.
4. Inspect and test screen # 1. Place a check mark to indicate either accept or reject.
5. Record the screen tension **number** as either **accept** or **reject**.
6. **Move to screen # 2.**
7. Inspect and test screen # 2. Place a check mark to indicate either **accept** or **reject**.
8. Record the screen tension **number** as either **accept** or **reject**.
9. Move to screen # 3.
10. Inspect and test screen # 3. Place a check mark to indicate either **accept** or **reject**.
11. Record the screen tension number as either **accept** or **reject**.
12. Submit your inspection report to the judge.
13. Move to screen # 4.
14. Tension and test screen # 4.
15. Place the tensioning tools back in their proper place on the workstation bench.
16. Return to the Inspection and Tension Station starting position.

Judging:
A screen printer will use the screen preparation **(inspection and tension)** checklist, reproduced on the following page, to judge the contestant's performance.

Time:
A timekeeper will control the time each contestant is allotted for the completion of the screen inspection and tension testing procedure. A maximum of fifteen (15) minutes is allocated to the procedure.

Points:
Contestants earn four (4) points for each inspection check mark that is recorded on the correct blank as an **accepted** or **rejected** inspection for items one (1) through four (4). Inspection item five (5), for each of the three (3) screens, requires the **number** of **Newtons** read from a tension meter be recorded as either **accepted** or **rejected.** A maximum of sixty (60) points may be given to contestants for the screen inspections.
A maximum of forty (40) points may be given to contestants for the screen tensioning performance.

Screen Preparation (Inspect and Tension) Checklist

Contestant Identification: _____ **Time Used:** _____.

Scenario: Inspect and test the tension on three (3) screens. The standard tension is 25 Newtons with a tolerance of + or - 5. Use the items listed on this checklist to inspect and determine if screens one (1), two (2) and three (3) meet production standards. **Do not retention screen that have stencils.**

Then tension the fabric (mesh) on screen number four (4) to 25 Newtons at screen's center.

Instructions for Judge's Scoring

Process Evaluation Criteria: Evaluation of the process involves how accurately the contestant performed with each screen. Depending on the placement of check marks and tension measurements for each of three inspection screens, award points of zero or four for each correct check mark and zero to four for the tension readings. Judges shall deduct one (1) point for each one (1) Newton of difference from the tension reading listed on the judging KEY. Tensioning screen number four (4) will require the judge to award 0 to 4 points for each tensioning operation listed while the contestant is working. Four (4) points may be awarded to contestants on each of the 25 lines provided in the Judges Scoring Box.

Contestants Rating for Performance of the Inspection Process:

Screen 1 Inspection and Tensioning Reports	**Accept**	**Reject**
1. Screen frame is free of damage.	_____	_____
2. Screen is free of cuts, splits or punctures.	_____	_____
3. Stencil is free of holes that could leak ink.	_____	_____
4. Screen mesh is not clogged in the image area.	_____	_____
5. Screen tension readings. **(Record Newtons)**	_____	_____

Screen 2 Inspection and Tensioning Reports	**Accept**	**Reject**
1. Screen frame is free of damage.	_____	_____
2. Screen is free of cuts, splits or punctures.	_____	_____
3. Stencil is free of holes that could leak ink.	_____	_____
4. Screen mesh is not clogged in the image area.	_____	_____
5. Screen tension readings. **(Record Newtons)**	_____	_____

Screen 3 Inspection and Tensioning Reports	**Accept**	**Reject**
1. Screen frame is free of damage.	_____	_____
2. Screen is free of cuts, splits or punctures.	_____	_____
3. Stencil is free of holes that could leak ink.	_____	_____
4. Screen mesh is not clogged in the image area.	_____	_____
5. Screen tension readings. **(Record Newtons)**	_____	_____

Note to contestant: Before proceeding with tensioning screen number four (4) submit this inspection report to the judge.

Screen 4 Tensioning

1. Inserted tension jacks at screen frame bottom. _____
2. Loosened bottom frame screws. _____
3. Used tension jacks to tighten screen fabric. _____
4. Softened bottom screen corners. _____
5. Tightened frame bottom screws. _____
6. Repeated steps 2, 3, 4, and 5 at top and sides. _____
7. Checked screen frame corners for square. _____
8. Removed tension meter from protective case. _____
9. Tensioned screen center to 25 Newtons. _____
10. Replaced tension meter in protective case. _____

Judge's Signature _____

Judges Scoring Box

60 Points Possible

_____
_____
_____
_____
_____

Sub Total _____

_____
_____
_____
_____
_____

Sub Total _____

_____
_____
_____
_____
_____

Sub Total _____

Inspection Total _____

40 Points Possible

_____
_____
_____
_____
_____
_____
_____
_____

Sub Total _____

Tensioning Total _____

Station Total _____

Screen Coating Assignment

Objective:
Coat and dry a screen with photosensitive emulsion. The freshly coated screen will be placed in the screen coating station screen dryer.

Screen coating station procedure instructions:

1. Select a screen with correct mesh count.
2. Select and inspect an emulsion scoop coater.
3. Pour enough emulsion into the scoop coater to coat one screen.
4. Coat a screen.
5. Place the wet screen in a screen dryer.
6. Check the dryer temperature.
7. Clean the scoop coater, tools, and screen coating station.

Judging:
A screen printer will use the screen coating station checklist, reproduced on the following page, to judge the contestant's performance, procedure and product.

Time:
A timekeeper will record the time each contestant needed to complete the screen coating procedure and place the newly coated screen in the screen coating station screen dryer.
A maximum of fifteen (15) minutes is allocated to coat and store the newly coated screen.

Points:
A maximum of fifty (50) points may be given to the contestant for a standard screen coating performance.

Screen Coating Checklist

Contestant Identification: _____ **Time Started:** _____

Directions:
This is a performance evaluation sheet to rate a contestant on a scale from 0 to 2 and 0 to 5 for various items in relation to an occupational competency (skill). This instrument can be used for process, product, safety, and time standard evaluation.

Process Evaluation Criteria:
Depending on the degree of proficiency demonstrated for each criterion point listed below award zero, one or two points.

Total Points Possible 30

Contestants Rating for Performance Process:	**Zero**	**One**	**Two**
1. Inspected screen fabric to insure its usable condition.	_____	_____	_____
2. Positioned emulsion scoop coater to prevent spills.	_____	_____	_____
3. Opened emulsion container lid.	_____	_____	_____
4. Poured adequate amount of emulsion into scoop coater.	_____	_____	_____
5. Held screen with one hand at correct angle.	_____	_____	_____
6. Coated contact side of the screen in one smooth pass.	_____	_____	_____
7. Coated squeegee side of screen smoothly.	_____	_____	_____
8. Removed excess emulsion left from scoop overflow.	_____	_____	_____
9. Put screen in dryer. Contact side up or down?	_____	_____	_____
10. Returned unused emulsion to the container.	_____	_____	_____
11. Placed lid on emulsion container.	_____	_____	_____
12. Removed emulsion from scoop coater and tools.	_____	_____	_____
13. Cleaned work area of spills and drips. (If needed)	_____	_____	_____
14. Coated screen in proper sequence.	_____	_____	_____
15. Used careful procedures, in allotted time.	_____	_____	_____

Product Evaluation: Rate the coated screen in accordance with the following point scale:
0 – Reject, 1 – Very Poor, 2 – fair, 3 – good, 4 – very good, 5 – excellent.

Points Possible 20

Contestants Product:	**Zero**	**One**	**Two**	**Three**	**Four**	**Five**
1. Screen coating is free of pin holes	____	____	____	____	____	____
2. Coating is free of drips and runs.	____	____	____	____	____	____
3. Coating is uniform in thickness.	____	____	____	____	____	____
4. Outside of screen frame is free of emulsion.	____	____	____	____	____	____

Total Points Earned _____

Judge's Name or Signature _____

SkillsUSA 2015
Screen Printing Technology
Screen Exposure and Washout

Screen Exposure and Washout Assignment

Objective: Create an image on a screen in accordance with the instructions given at the screen exposure and washout station.

Screen exposure and washout station instructions:

1. Refer to the art file and select the film positive needed to expose the screen for printing the designs red elements.
2. Check film positive's unmarked properties, clean the film positive if needed
3. **Position the film positive on an unexposed emulsion coated screen with the registration marks (crosshairs) at the top and bottom center of the film positive on the screen's centerline. The registration mark (+) at the bottom of the film positive shall be positioned 6 1/4 inches from the outside edge of the frame at the bottom of the screen.**
4. Secure the film positive to the screen
5. Place the screen and film positive on the exposure unit
6. Expose the screen for approximately 3 1/2 minutes
7. Remove film positive and return it to the art file
8. Place the exposed screen in a washout booth
9. Wet both sides of the exposed screen with warm water
10. Allow the unexposed emulsion to soak for a few seconds
11. Spray the unexposed area of the image with a low-pressure sprayer.
12. Washout all of the unexposed emulsion from the stencil
13. Remove the excess water from the screen
14. Check for emulsion binder (scum) left on the screen's washout areas
15. Place screen in a screen dryer rack

Judging:
A screen printer will use the screen exposure and washout station checklist to judge the contestant's performance, procedure and product.

Time:
A timekeeper will record the time each contestant needed to complete the screen exposure and washout procedure. A maximum of fifteen (15) minutes is allocated for the screen exposure and washout procedure.

Points:
A maximum of one hundred (100) points may be given to the contestant for a screen-printing stencil procedure that meets industry standards.

Screen Exposure and Washout Station Checklist

Contestant Number: _____ **Time:** _____

Directions:
This is a performance evaluation sheet to rate a contestant on a scale of 0 to 4 and 0 to 5 for various items in relation to an occupational competency (skill). This instrument can be used for process, product, safety and time standard evaluations.

Process Evaluation:
Evaluation of this process involves exposing a screen-printing screen with an ultra-violet exposure unit and washout of unexposed emulsion to create a stencil.

Contestants Rating for Performance of the Process:	**Zero**	**One**	**Two**	**Three**	**Four**
1. Selected needed film positive from art file.	____	____	____	____	____
2. Inspected film positive for dirt or marks.	____	____	____	____	____
3. Cleaned film positive and exposure unit glass, if needed.	____	____	____	____	____
4. Took an unexposed screen from screen dryer.	____	____	____	____	____
5. Placed and aligned the film positive on the screen.	____	____	____	____	____
6. Taped the film positive to the screen.	____	____	____	____	____
7. Checked exposure unit for correct exposure time.	____	____	____	____	____
8. Placed screen and film positive on the exposure unit.	____	____	____	____	____
9. Placed bleeder cord on screen and closed exposure unit lid.	____	____	____	____	____
10. Checked exposure unit timer for correct preset time.	____	____	____	____	____
11. Turned on exposure unit and vacuum pump power.	____	____	____	____	____
12. Checked exposure unit for proper blanket vacuum.	____	____	____	____	____
13. Exposed the screen.	____	____	____	____	____
14. Turned off exposure unit to allow vacuum release.	____	____	____	____	____
15. Opened the exposure unit lid.	____	____	____	____	____
16. Transferred screen to washout booth and wet both sides.	____	____	____	____	____
17. Washed out the unexposed emulsion to create a stencil.	____	____	____	____	____
18. Blotted excess water from stencil and inspected for scum.	____	____	____	____	____
19. Placed screen in screen dryer rack.	____	____	____	____	____
20. Cleaned up the testing station.	____	____	____	____	____

Product Evaluation: Evaluation of the dried screen in accordance with the following points scale;
0 – reject, 1 -- very poor, 2 -- fair, 3 -- good, 4 -- very good, 5 – excellent

Contestants Product Points **(20 Possible)**.	**Zero**	**One**	**Two**	**Three**	**Four**	**Five**
1. Image was centered and not crooked.	____	____	____	____	____	____
2. Image could be registered.	____	____	____	____	____	____
3. Screen was properly exposed.	____	____	____	____	____	____
4. Screen was properly washed out and dried.	____	____	____	____	____	____

Total Points Earned _____

Judge's Signature _____

SkillsUSA 2015
Screen Printing Technology
Screen Block Out

Screen Block Out Assignment

The Screen Block Out Station will be not be part of the 2015 Screen Printing Technology Performance Test. All Contestants will automatically receive 50 points on the Screen Printing Technology Scorecard. This action is taken to afford more time for the testing of additional contestants.

Objective:
Block out portions of a test screen where direct emulsion did not coat the screen fabric, or where the cured emulsion has a flaw such as a pin hole, scratch, cut or other defect that would allow plastisol to be applied to incorrect areas on a substrate during the printing process.

Screen Block Out station instructions:

1. Remove the test screen from the screen dryer.
2. Compare the number on the test screen to Contestant I D number.
3. Inspect block out station table for cleanliness and objects that could damage the test screen.
4. Place the test screen on the block out station table.
5. Use block out tape to tape off the sides of the screen where emulsion is missing.
6. Use block out tape to tape off the top and bottom of the screen where emulsion is missing.
7. Create corner dams to prevent ink leaks.
8. Inspect test screen stencil for flaws, scum and orientation.
9. Use block out tape to tape off flaws such as pinholes.
10. Present test screen to the block out Judge for final check and evaluation.

Judging:
A screen printer will use the screen block out station checklist, reproduced on the following page, to judge the contestant's performance, procedure and product.

Time:
A timekeeper will record the time each contestant needed to complete the screen block out procedure. A maximum of fifteen (15) minutes is allocated to the screen block out procedure.

Points:
A maximum of fifty (50) points may be given to the contestant for a screen block out that meets industry standards.

Screen Block Out Station Checklist

Contestant Number: _____ **Time:** _____

Directions:
This is a performance evaluation sheet to rate a contestant on a scale of 0 to 4 and 0 to 5 for various items in relation to an occupational competency (skill). This instrument can be used for process, product, safety and time standard evaluations.

Process Evaluation:
Evaluation of the process involved with blocking out portions of a test screen where direct emulsion does not coat the screen fabric.

	Points Possible 40				
Contestants Rating for Performance of the Process	**Zero**	**One**	**Two**	**Three**	**Four**
1. Removed the test screen from the screen dryer	____	____	____	____	____
2. Compared test screen number to Contestant I D number.	____	____	____	____	____
3. Inspected station table for cleanliness and foreign objects.	____	____	____	____	____
4. Placed the test screen on the block-out station table.	____	____	____	____	____
5. Used block-out tape to tape off the sides of the screen.	____	____	____	____	____
6. Used block-out tape to tape off top and bottom of screen.	____	____	____	____	____
7. Created corner dams to prevent ink leaks.	____	____	____	____	____
8. Inspected test screen stencil for flaws, scum and orientation.	____	____	____	____	____
9. Used block-out tape to tape off flaws such as pinholes.	____	____	____	____	____
10. Presented screen to judge for final check and evaluation.	____	____	____	____	____

Product Evaluation:
Evaluation of the dried screen in accordance with the following points scale;
0 – reject, 1 -- very poor, 2 -- fair, 3 -- good, 4 -- very good, 5 – excellent

	Points Possible 10					
Contestants Product:	**Zero**	**One**	**Two**	**Three**	**Four**	**Five**
1. Tape around frame is smooth and will not leak.	____	____	____	____	____	____
2. Flaws such as pinholes taped over and will not leak.	____	____	____	____	____	____

Total Points Earned _____

Judge's Signature _____

SkillsUSA 2015
Screen Printing Technology
Image Registration

Image Registration Assignment

Objective:
Place a screen on a screen press and register the stencil image to screen stencils that have been registered and used to print an image on a substrate.

Image registration station instructions:
1. Remove the test screen from the reclaim area.
1. Do not remove block-out tape from the registration marks.
2. Print an image using the screen with darkest ink on a substrate.
3. Spot cure the dark image that is to be the registration reference.
4. Register the screen to an image that is being printed on the press.
5. Ink the screen.
6. Test the newly registered image by printing the multicolor image on the substrate provided.
7. Remove the test image from the press and place it on the conveyer dryer belt.
8. Print two (2) T-shirts.
9. Remove the T-shirts from the press and place them on the conveyer dryer belt.
10. Remove the test screen and place it by the reclaim sign on the worktable.

Judging:
A screen printer will use the image registration station checklist, reproduced on the following page, to judge the contestant's performance, procedure and product.

Time:
A timekeeper will record the time each contestant needed to complete the image registration procedure. A maximum of fifteen (15) minutes is allocated to the image registration procedure.

Points:
A maximum of one hundred (100) points may be given to the contestant for an image registration that meets industry standards.

Image Registration Station Checklist

Contestant Number: _____ **Time:** _____

Directions:
This is a performance evaluation sheet to rate a contestant on a scale of 0 to 4 and 0 to 5 for various items in relation to an occupational competency (skill). This instrument can be used for process, product, safety and time standard evaluations.

Process Evaluation:
Evaluation of process involved with registering a screen-printing screen on a rotary press.

Contestants Rating for Performance of the Process:	**Zero**	**One**	**Two**	**Three**	**Four**
1. Took screen from reclaim area and attached it to the press.	____	____	____	____	____
2. Checked the rotary press head for zeroed out position.	____	____	____	____	____
3. Cleaned ink from mesh to allow view of printed images.	____	____	____	____	____
4. Registered to an image being printed at this station.	____	____	____	____	____
5. Checked screen for off contact and level.	____	____	____	____	____
6. Checked all screens and screen frames for unwanted ink.	____	____	____	____	____
7. Applied ink to screen being registered.	____	____	____	____	____
8. Selected appropriate squeegee.	____	____	____	____	____
9. Applied proper adhesive and amount to the platen.	____	____	____	____	____
10. Spot cure dark image that is the registration reference.	____	____	____	____	____
11.Flooded the newly registered screen with ink.	____	____	____	____	____
12.Printed registered image to a test image on substrate.	____	____	____	____	____
13.Checked test image for ink smears, pin holes, etc.	____	____	____	____	____
14.Cured the image in the conveyor dryer.	____	____	____	____	____
15.Printed two T-shirts with the multicolor image.	____	____	____	____	____
16.Dried the T-shirts in a conveyor dryer.	____	____	____	____	____
17.Removed test screen and placed it in reclaim area.	____	____	____	____	____
18.Cleaned work area of spills and drips. (If needed)	____	____	____	____	____
19.Submitted test image and T-shirts to the judge.	____	____	____	____	____
20.Completed registration procedure in allotted time.	____	____	____	____	____

Product Evaluation:
Evaluation of the registered image in accordance with the following points scale;
0 – reject, 1 -- very poor, 2 -- fair, 3 -- good, 4 -- very good, 5 – excellent

Contestants Product Points **(20 Possible)**.	**Zero**	**One**	**Two**	**Three**	**Four**	**Five**
1. Test image was in registration.	____	____	____	____	____	____
2. All parts of the image printed.	____	____	____	____	____	____
3. Image was not blurred.	____	____	____	____	____	____
4. Ink smears do not appear in the image.	____	____	____	____	____	____

Total Points Earned _____

Judge's Signature _____

SkillsUSA 2015
Screen Printing Technology
Image Printing

Image Printing Assignment

Objective:
Print and dry at least seven (7) shirts within seven (7) minutes that are of salable quality.

Image printing station instructions:
1. Check the ink level in each screen.
2. Check the press shirt boards for proper adhesion.
3. Operate the printing press to print a multicolor image on shirts.
4. Spot cure after each image color **where printing wet on wet is not desirable**.
5. Place the shirts on the belt of a conveyor dryer.
6. Stack the printed shirts and give them to the judge
7. Remove ink smears from press, screens, squeegees, tools and image printing station area.

Judging:
A screen printer will use the image printing station checklist, reproduced on the following page, to judge the contestant's performance, procedure and product. Contestants may earn extra points by printing more than five (5) shirts within seven (7) minutes.

Time:
A timekeeper will record the time each contestant needed to complete the image printing procedure. A maximum of fifteen (15) minutes is allocated to the total image printing station procedure. Time stops when the contestant is seated.

Points:
A maximum of two hundred (200) points may be given to the contestant for a high quality image printing performance.

Image Printing Station Checklist

Contestant Number: _____ **Time:** _____

Directions: This is a performance evaluation sheet to rate a contestant on a scale of 0 to 8 and 0 to 20 for various items in relation to an occupational competency (skill). This instrument can be used for process, product, safety and time standard evaluations.

Process Evaluation: Evaluation of the process involves assessing how well a contestant can print shirts as well as how fast the shirts were printed on a rotary press.

Possible Points 120

Contestants Rating for Performance of the Process:	**Zero**	**Two**	**Four**	**Six**	**Eight**
1. Checked the ink level in each screen.	____	____	____	____	____
2. Checked shirt board for proper fabric adhesion.	____	____	____	____	____
3. Chose and applied proper adhesive type and amount.	____	____	____	____	____
4. Inspected all screens for off contact and cleanliness.	____	____	____	____	____
5. **Spot cured when printing wet on wet is not desirable.**	____	____	____	____	____
6. Printed three salable T-shirts, 1 thru 3.	____	____	____	____	____
7. Skillfully placed each shirt in dryer.	____	____	____	____	____
8. Printed salable T-shirts, 4 thru 6.	____	____	____	____	____
9. Skillfully placed each shirt in dryer.	____	____	____	____	____
10. Printed salable T-shirts, 7 or more.	____	____	____	____	____
11. Skillfully placed each of the shirts in dryer.	____	____	____	____	____
12. Stopped printing when seven (7) minutes had elapsed.	____	____	____	____	____
13. Collected the printed shirts from the dryer basket.	____	____	____	____	____
14. Stacked printed shirts with the image up for judging.	____	____	____	____	____
15. Completed printing procedure in allotted time safely.	____	____	____	____	____

Product Evaluation: Using the printing technical specifications found in the customer's technical packet (Tech.-Pack) evaluate the printed garments in accordance with the following zero to twenty point scale. **Deduct five points for each error found on the garments!**

0 – reject, 5 -- fair, 10 -- good, 15 -- very good, 20 – excellent

Contestants Product Points **(80 Possible)**	**Zero**	**Five**	**Ten**	**Fifteen**	**Twenty**
1. Images were printed at correct height.	_____	_____	_____	_____	_____
2. Images were printed on center.	_____	_____	_____	_____	_____
3. Images were not crooked.	_____	_____	_____	_____	_____
4. Ink evenly applied without smudges on shirts.	_____	_____	_____	_____	_____

Total Points Earned _____

Judge's Signature _____

SkillsUSA 2015
Screen Printing Technology
Screen Reclaiming

Screen Reclaiming Assignment

The Screen Reclaiming Station will be not be part of the 2015 Screen Printing Technology Performance Test. All Contestants will automatically receive 100 points on the Screen Printing Technology Scorecard. This action is taken to afford more time for the testing of additional contestants.

Objective:
Reclaim a screen that has been used to print an image on a shirt in accordance with the instructions given at the screen reclaiming station.

Screen reclaiming station instructions:
1. Remove a used screen from a storage rack.
2. Place screen in a cleanup rack that compares to a press with side clamps
3. Remove ink
4. Remove block-out tape (If present)
5. Remove emulsion
6. Secure high-pressure sprayer
7. Place screen in a storage rack
8. Clean up the workstation

Judging:
A screen printer will use the screen reclaiming station checklist, reproduced on the following page, to judge the contestant's performance, procedure and product.

Time:
A timekeeper will record the time each contestant needed to complete the screen reclaiming procedure. A maximum of fifteen (15) minutes is allocated to the screen reclaiming procedure. Time stops when the contestant is seated.

Points:
A maximum of one hundred (100) points may be given to the contestant for a screen reclaiming procedure that meets industry standards.

Screen Reclaiming Station Checklist

This station will not be in operation during the 2015 Competition

Contestant Number: _____ **Time:** _____

Directions: This is a performance evaluation sheet to rate a contestant on a scale of 0 to 4 and 0 to 5 for various items in relation to an occupational competency (skill). This instrument can be used for process, product, safety and time use evaluations.

Process Evaluation: Evaluation of the process involved with reclaiming a screen.

	Points Possible 80				
Contestants Rating for Performance of the Process:	**Zero**	**One**	**Two**	**Three**	**Four**
1. Donned apron and safety glasses.	____	____	____	____	____
2. Used ear protection and gloves.	____	____	____	____	____
3. Removed screen from storage rack.	____	____	____	____	____
4. Placed screen on clean up rack.	____	____	____	____	____
5. Removed excess ink.	____	____	____	____	____
6. Removed block out tape. (If Present)	____	____	____	____	____
7. Used towels and solvent to remove remaining ink.	____	____	____	____	____
8. Disposed of the dirty towel.	____	____	____	____	____
9. Placed screen in the washout booth.	____	____	____	____	____
10.Turned the washout booth backlight off..	____	____	____	____	____
11. Applied emulsion remover.	____	____	____	____	____
12. Allowed time for the stencil emulsion to soften.	____	____	____	____	____
13. Used high-pressure washer to remove emulsion.	____	____	____	____	____
14. Used brush to help loosen emulsion hard spots.	____	____	____	____	____
15. Blotted or vacuumed excess water from the screen.	____	____	____	____	____
16. Placed the reclaimed screen in the screen dryer.	____	____	____	____	____
17. Cleaned the washout booth.	____	____	____	____	____
18. Stowed the high-pressure washer hose and nozzle.	____	____	____	____	____
19. Used safe procedures.	____	____	____	____	____
20. Completed reclaiming procedure in allotted time.	____	____	____	____	____

Product Evaluation: Evaluation of the reclaimed screen in accordance with the following points scale; 0 – reject, 1 -- very poor, 2 -- fair, 3 -- good, 4 -- very good, 5 – excellent

	Points Possible 20					
Contestants Product:	**Zero**	**One**	**Two**	**Three**	**Four**	**Five**
1. Screen is free of block out tape.	____	____	____	____	____	____
2. Screen is free of ink residue.	____	____	____	____	____	____
3. Screen is free of emulsion residue.	____	____	____	____	____	____
4. Frame is clean and dry.	____	____	____	____	____	____

Total Points Earned _____

Judge's Signature _____

SkillsUSA 2015
Screen Printing Technology
Quality Control Problem

Quality Control Problem Assignment

Objective:
Judge quality levels of five (5) garments that have been rejected by a quality assurance auditor before the auditor negotiates a new price for your company's customer.

Quality control station instructions:
1. Study technical specifications contained in the Tech Pack.
2. Obtain the Q. C. problem worksheet from the Q. C. station timekeeper
3. Study the quality assurance worksheet scenario and inspection steps.
4. Move to garment quality assessment station inspection pedestal.
5. Select garment number one (1) and spread it out on the inspection pedestal.
6. Inspect both sides of the garment number one (1).
7. Rate the degree of defect garment one (1) on the quality control inspection worksheet.
8. Place garment one (1) in box marked for either none, minor or major rejects.
9. Inspect the remaining four (4) garments according to steps 5, 6, 7 and 8.
10. Return to the judge or timekeeper and submit your completed report that is recorded on the quality control problem worksheet.

Judging:
A screen printer will use the quality control problem worksheet, reproduced on the following two pages, to judge and score the contestant's performance.

Time:
A timekeeper will record the time each contestant needed to complete the quality control problem procedure. A maximum of fifteen (15) minutes is allocated to the quality control problem procedure. Time stops when the contestant is seated.

Points:
A maximum of one hundred (100) points may be given to the contestant for the quality assurance audit that meets industry standards.

Quality Control Problem Worksheet

Contestant Identification: _____ Time Finished: _____

Scenario:
As a quality control inspector for New Era Screen Printing Company you have been given the task of assessing the validity of a recent quality assurance audit performed by one of your company's customers. The quality assurance auditor rejected five (5) garments. You have been instructed to use the criterion lists printed on the back of this worksheet to determine if each rejected garment was accurately evaluated and record the degree of each defect.

==========

The quality assurance audit criterion lists printed on the back of this worksheet has a rating scale for each of the ten possible defects that might be observed on each of the five sample garments that are being inspected for the second time. Rate each of the defect criterion factors listed by placing a check mark in the blank that indicates you found either no defect **(NONE)**, minor defect **(MINOR)**, or a major defect **(MAJOR)**. Your evaluation of each of the ten possible defects will be supported in part by the image specifications included in the technical packet (Tech-Pack) that lists quality standards set by your company's customer. As you evaluate each of the five (5) garments against the ten (10) possible defects it will be your responsibility to determine if the garments should have been rejected on the basis of a garment being considered **not saleable**.

Minor defects may be acceptable if the garment is considered as **saleable**.
A minor defect example could be a small pinhole ink deposit.

Major defects will render a garment as **not saleable**.
A major defect example would be a large smear of ink, or image printed out of dimension tolerance.

Judge's Evaluation Criteria:
Depending on where the contestant placed a check mark to indicate the degree of quality defect for each criterion factor listed below award one or zero points.
Scoring will be accomplished by comparing the contestants rating to the judge's rating key.

Judge's Score Tallied Below This Line

	Shirt 1	Shirt 2	Shirt 3	Shirt 4	Shirt 5	Correct		Q. C.
Contestant ID	Correct	Correct	Correct	Correct	Correct	Checks	Multiply	Problem
Identification	Checks	Checks	Checks	Checks	Checks	Total		Score
							X 2 =	

A quality control inspector report form is printed on the back of this page.

Quality Control Inspector Report Form

Garment 1-Type of Inspection Defect or Defects Found	None	Minor	Major
1. Image printed on correct vertical dimension.			
2. Image printed on center.			
3. Image crooked.			
4. Ink smudges on sample garment.			
5. Color density varies across the image.			
6. Ink printed in non-image area due to pinhole.			
7. Last color covers previous colors.			
8. Missed register between colors.			
9. Garment fabric damage.			
10.Colors match the customer's standard.			

Garment 2-Type of Inspection Defect or Defects Found	None	Minor	Major
1. Image printed on correct vertical dimension.			
2. Image printed on center.			
3. Image crooked.			
4. Ink smudges on sample garment.			
5. Color density varies across the image.			
6. Ink printed in non-image area due to pinhole.			
7. Last color covers previous colors.			
8. Missed register between colors.			
9 Garment fabric damage.			
10.Colors match the customer's standard.			

Garment 3-Type of Inspection Defect or Defects Found	None	Minor	Major
1. Image printed on correct vertical dimension.			
2. Image printed on center.			
3. Image crooked.			
4. Ink smudges on sample garment.			
5. Color density varies across the image.			
6. Ink printed in non-image area due to pinhole.			
7. Last color covers previous colors.			
8. Missed register between colors.			
9. Garment fabric damage.			
10.Colors match the customer's standard.			

Garment 4-Type of Inspection Defect or Defects Found	None	Minor	Major
1. Image printed on correct vertical dimension.			
2. Image printed on center.			
3. Image crooked.			
4. Ink smudges on sample garment.			
5. Color density varies across the image.			
6. Ink printed in non-image area due to pinhole.			
7. Last color covers previous colors.			
8. Missed register between colors.			
9. Garment fabric damage.			
10.Colors match the customer's standard.			

Garment 5-Type of Inspection Defect or Defects Found	None	Minor	Major
1. Image printed on correct vertical dimension.			
2. Image printed on center.			
3. Image crooked.			
4. Ink smudges on sample garment.			
5. Color density varies across the image.			
6. Ink printed in non-image area due to pinhole.			
7. Last color covers previous colors.			
8. Missed register between colors.			
9. Garment fabric damage.			
10.Colors match the customer's standard.			

SkillsUSA 2015
Screen Printing Technology
Written Test

Written Test Assignment

Objective:
Correctly answer twenty-five (25) multiple choice test questions. (Questions will relate to graphic imaging and screen-printing processes)

Technical knowledge test station instructions:
1. Read instructions on the test book
2. Use number 2 lead pencil to mark the correct response
3. Give the testing administrator notice when the test has been completed
4. Remain seated until dismissed by the test administrator

Judging:
A technical knowledge test administrator will administer and score the technical knowledge test. Scoring will be accomplished by comparing a contestant's responses to an answer key prepared by the screen-printing technical committee.

Time:
The technical knowledge test administrator will record the time each contestant uses to complete the technical knowledge test. A maximum of fifteen (15) minutes is allocated to the technical knowledge testing procedure.

Points:
A maximum of one hundred (100) points may be given to the contestant who scores 100 percent on the technical knowledge written test.

Skills USA

Screen Printing Technology

Technical Knowledge Examination

Directions:

1. You will have 15 minutes to complete this 25-question multiple-choice test.
2. Write your contestant number on the Scantron Answer Sheet.
3. Use a No. 2 lead pencil to mark your responses to the questions on the Scantron Answer Sheet.
4. Do not mark on this test booklet.
5. When you have completed answering the 25 test questions, place both the answer sheet and test booklet face down on the table and wait for instructions from the testing monitor.

SkillsUSA 2015
Screen Printing Technology
Oral Professional Assessment

Oral Professional Assessment Assignment

Objective:
Participate in an oral professional assessment in a role-playing job interview setting related to a screen-printing career choice.

Oral professional assessment station instructions:

1. Introduce yourself
2. Take the seat indicated by the interviewer
3. Answer questions
4. Ask questions that you deem appropriate

Judging:
A human resources interviewer with basic knowledge of the screen printing industry will use the oral professional assessment station checklist, reproduced on the following page, to judge the contestant's screen printing knowledge and preparation needed for employment in a screen printing occupation.

Time:
The human resources interviewer will record the time each contestant participated in a job interview. A maximum of fifteen (15) minutes is allocated to the oral professional assessment.

Points:
A maximum of one hundred (100) points may be given to the contestant for an oral professional assessment that meets Equal Employment Opportunity (EEO) standards.

Oral Professional Assessment Station Checklist

Contestant Number: _____ **Time:** _____

Directions:
This oral professional assessment checklist is designed to rate a contestant's responses to questions on a scale of 0 to 20. Five question areas or problems should be posed that are related to the contestant's occupational goals in the field of graphic imaging. This instrument should be used to record indications of person's readiness for employment as a screen printer.

Process Evaluation:
Evaluation of the process involves interviewing a person who has applied for a job with a company that produces products requiring screen-printing processes. Questions will be related to a performance test that might be given to the applicant by a company's production personnel.

Questions to be developed by the screen-printing technical committee prior to the day of the state level screen-printing performance test.

Questions related to the following areas:

1. Ability to handle assignments
2. Ability to answer questions asked in technical terms
3. Situation handled in a professional manner
4. Demonstration of critical thinking throughout the job interview scenario
5. Realistic self concept

The following page is a copy of the *Oral Professional Assessment Station Checklist* related to the five areas listed above with the attending rating scale for each question area.

Note: The specific questions have been removed and will be revised annually by technical committee members.

Oral Professional Assessment Station Checklist

Contestant Number: _____ Start Time: _____ End Time: _____

1. Ability to handle work assignments. **Question Area Score: 0 to 20 Points _____**

2. Answered questions using technical terms. **Question Area Score: 0 to 20 Points _____**

3. Situation handled in a professional manner. **Question Area Score: 0 to 20 Points _____**

4. Used critical thinking during the interview. **Question Area Score: 0 to 20 Points _____**

5. Demonstrated a realistic self-concept. **Question Area Score: 0 to 20 Points _____**

Total Points Out of Possible 100 _____

SkillsUSA 2015
Screen Printing Technology
Helpful Hints

Prior to Performance Test

1. Contact people to donate supplies for the performance test
   a. Shirts
   b. Ink
   c. Cleaning solvents
   d. Screen fabric
   e. Etc.

2. Contact suppliers to donate prizes for contestants (3 Secondary/3Post Secondary)
   a. First prize – Tools and Shirts
   b. Second prize – Tools and Shirts
   c. Third prize – Tools and Shirts

3. Make sure that the contestants can complete their assignments at each testing station in the time allotted
   A. Screen Preparation (Tensioning)
   B. Screen Coating
   C. Screen Exposure and Washout
   D. Screen Blockout **(Inactive in 2015)**
   E. Image Registration
   F. Image Printing
   G. Screen Reclaiming **(Inactive in 2015)**
   H. Quality Control Problem
   I. Written Knowledge Test
   J. Oral Professional Assessment
4. Contact screen printers to judge contests
5. Contact people to keep time

During the Performance Test

1. Check Contestant Number against the Testing Schedule
2. Announcements
3. Special instructions
4. Dismiss with a Good Luck Wish

After the Performance Test

1. Report the results

SkillsUSA 2015
Screen Printing Technology
Meeting Agenda for Contestant Orientation/Written Test
Tuesday, June 23, 2015 from 2 p.m. to 4 p.m., in Contest Area, South Wing A, Kentucky Exposition Center
Oral Interview: All Contestants, Wednesday 8 a.m. - 4:45 p.m., Contest Area, South Wing A, Kentucky Exposition Center
Contest: College/Postsecondary, Wednesday, 9 a.m. – 3 p.m., Contest Area, South Wing A, Kentucky Exposition Center
Contest: High School, Thursday, 8 a.m.– 4:30 p.m., Contest Area, South Wing A, Kentucky Exposition Center
Debriefing: Thursday, 4:30 p.m. - 5 p.m., Contest Area, South Wing A, Kentucky Exposition Center

Introductions
Roll call of contestants - Assign contestant numbers
Travel stipends awards:

- Ms. Eileen Cassidy, Director of Graphic Arts Education Research Foundation
- Mr. Johnny Shell, Vice President of Technical Services, SGIA

Review the testing schedules with contestants numbers listed on the schedules
Review the areas to be tested (Pass out the Assignment and Checklist Booklets)

A. Screen Preparation (Inspection and Tensioning)
B. Screen Coating
C. Screen Exposure & Washout
D. Screen Blockout will not be evaluated in 2015 points will be posted on scorecard!
E. Image Registration
F. Image Printing
G. Screen Reclaiming will not be evaluated in 2015 points will be posted on scorecard!
H. Quality Control Problem
I. Written Knowledge Test
J. Oral Professional Assessment

Special instructions:

A. Judges team will not give instruction during tests on Wednesday or Thursday
B. Pass out the equipment operation manuals
C. Screen Tensioning Demonstration; To Be Named, Demonstration
D. SkillsUSA Competition Rules and Regulations Revision
E. Optional Tools and Equipment. (Safety Glasses, Ear Protection, Apron, and Vinyl Gloves)
F. Questions and Answers

ADMINISTER THE WRITTEN KNOWLEDGE TEST - FIFTEEN (15) MINUTE TIME LIMIT
Dismiss

SkillsUSA 2015
Screen Printing Technology
Industry Awards and Prizes

Awards and prizes presented to the Screen Printing Technology performance test winners should be related to the skills being developed in the contestants technical education program. Awards and prizes may be in the form of scholarships, tools, books, manuals, or educational travel. Awards must be equal in value for both secondary and post secondary contestants. Prizes are needed for the first, second, and third place winners.

Secondary

1st Place Items:

- 12 MZX-UL 18"x20" Newman Roller Frames with mesh, wrenches, 6 Newman constant force manual squeegees
- 1 gal. Murakami Emulsion
- 1-set M3 Series ink
- 1 coating trough
- 6 squeegees with handles
- 1 10-step exposure calculator
- AccuRIP software OR Separation Studio separation software
- 10-pak of artwork
- Operation Screen Print training DVD

2nd Place Items:

- 8 MZX–UL 18"x20" Newman Roller Frames with mesh, wrenches, 4 Newman constant force manual squeegees
- 1qt. each of white and black ink
- 1 qt. Murakami emulsion
- 4 squeegees with handles
- 5-pak artwork

3rd Place Items:

- 6 MZX-UL 18"x20" Newman Roller Frames with mesh, wrenches, 3 Newman constant force manual squeegees
- $100 Certficiate toward the purchase of products from NazDar

Post Secondary

1st Place Items:

- 12 MZX-UL 18"x20" Newman Roller Frames with mesh, wrenches, 6 Newman constant force manual squeegees
- 1 gal. Murakami Emulsion
- 1-set M3 Series ink
- 1 coating trough
- 6 squeegees with handles
- 1 10-step exposure calculator
- AccuRIP software OR Separation Studio separation software
- 10-pak of artwork
- Operation Screen Print training DVD

2nd Place Items:

- 8 MZX–UL 18"x20" Newman Roller Frames with mesh, wrenches, 4 Newman constant force manual squeegees
- 1qt. each of white and black ink
- 1 qt. Murakami emulsion
- 4 squeegees with handles
- 5-pak artwork

3rd Place Items:

- 6 MZX-UL 18"x20" Newman Roller Frames with mesh, wrenches, 3 Newman constant force manual squeegees
- $100 Certficiate toward the purchase of products from NazDar

Screen Printing Schedule for Wednesday, June 24, 2015						
		H. S. Oral	**Q. C.**	**Screen**	**Post Secondary**	**Post Secondary**
Time	Minutes	**Interview**	**Problem**	**Coating**	**Screen**	
8:00	Test 15	S 1			**Coating**	
8:15	Rotation 5				**PS 1**	**Image**
8:20	Test 15	S 2	S 1			**Registering**
8:35	Rotation 5				**PS 2**	**PS 1**
8:40	Test 15	S 3	S 2			
8:55	Rotation 5				**PS 3**	**PS 2**
9:00	Test 15	S 4	S 3			
9:15	Rotation 5				**PS 4**	**PS 3**
9:20	Test 15	S 5	S 4			
9:35	Rotation 5					**PS 4**
9:40	Test 15	S 6	S 5	S 1	**Inspection**	
9:55	Rotation 5				**Tension**	
10:00	Test 15	S 7	S 6	S 2	**PS 1**	**Image**
10:15	Rotation 5					**Printing**
10:20	Test 15	S 8	S 7	S 3	**PS 2**	**PS 1**
10:35	Rotation 5					
10:40	Test 15	S 9	S 8	S 4	**PS 3**	**PS 2**
10:55	Rotation 5					
11:00	Test 15	S 10	S 9	S 5	**PS 4**	**PS 3**
11:15	Rotation 5					
11:20	Test 15	S 11	S 10	S 6		**PS 4**
11:35	Rotation 5					
11:40	**Break 30**	**Lunch**	**Lunch**	**Lunch**	**Lunch**	**Lunch**
12:10	Test 15	S 12	S 11	S 7	**Exposure**	
12:25	Rotation 5				**Washout**	
12:30	Test 15	S 13	S 12	S 8	**PS 1**	
12:45	Rotation 5					
12:50	Test 15	S 14	S 13	S 9	**PS 2**	
1:05	Rotation 5					
1:10	Test 15	S 15	S 14	S 10	**PS 3**	
1:25	Rotation 5					
1:30	Test 15	S 16	S 15	S 11	**PS 4**	
1:45	Rotation 5					
1:50	Test 15	S 17	S 16	S 12		
2:05	Rotation 5					
2:10	Test 15	S 18	S 17	S 13		
2:25	Rotation 5					
2:30	Test 15	S 19	S 18	S 14		
2:45	Rotation 5					
2:50	Test 15	S 20	S 19	S 15		
3:05	Rotation 5					
3:10	Test 15	S 21	S 20	S 16		
3:25	Rotation 5					
3:30	Test 15	**PS 1**	S 21	S 17		
3:45	Rotation 5					
3:50	Test 15	**PS 2**	**PS 1**	S 18		
4:05	Rotation 5					
4:10	Test 15	**PS 3**	**PS 2**	S 19		
4:25	Rotation 5					
4:30	Test 15	**PS 4**	**PS 3**	S 20		
4:45	Rotation 5					
4:50	Test 15		**PS 4**	S 21		
5:05	**Finish**					

Screen Printing Technology

Furnishings Equipment Utilities

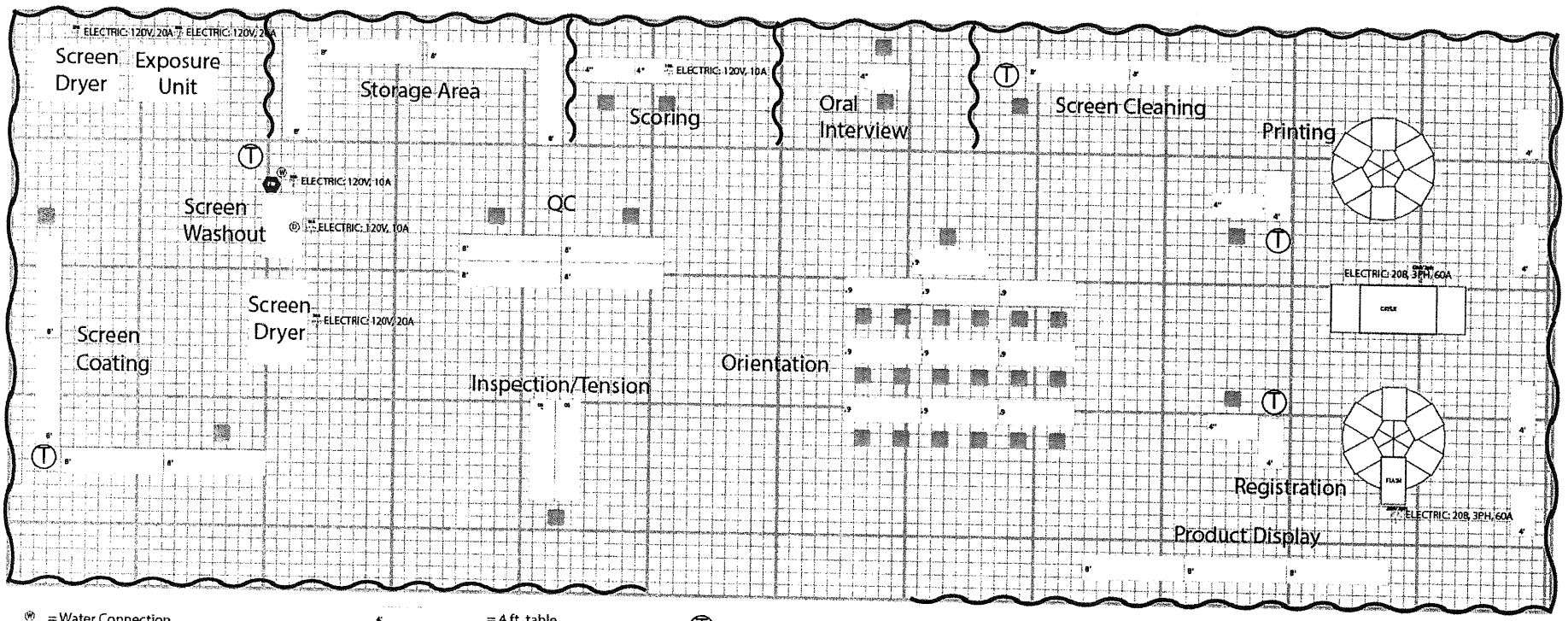

= Water Connection

= Power Washer

= Drain Outlet

= 4 ft. table

= 6 ft. table

= 8 ft. table

= Trashcan

= 3 ft. Pipe/Drape

= 1 sq. ft.

= Chair

Screen Printing Schedule for Thursday, June 25, 2015					
		Inspection	**Exposure**	**Image**	**Image**
Time	Minutes	**Tensioning**	**Washout**	**Registering**	**Printing**
8:00	Test 15	S 1			
8:15	Rotation 5				
8:20	Test 15	S 2	S 1		
8:35	Rotation 5				
8:40	Test 15	S 3	S 2	S 1	
8:55	Rotation 5				
9:00	Test 15	S 4	S 3	S 2	S 1
9:15	Rotation 5				
9:20	Test 15	S 5	S 4	S 3	S 2
9:35	Rotation 5				
9:40	Test 15	S 6	S 5	S 4	S 3
9:55	Rotation 5				
10:00	Test 15	S 7	S 6	S 5	S 4
10:15	Rotation 5				
10:20	Test 15	S 8	S 7	S 6	S 5
10:35	Rotation 5				
10:40	Test 15	S 9	S 8	S 7	S 6
10:55	Rotation 5				
11:00	Test 15	S 10	S 9	S 8	S 7
11:15	Rotation 5				
11:20	Test 15	S 11	S 10	S 9	S 8
11:35	Rotation 5				
11:40	Test 15	S 12	S 11	S 10	S 9
11:55	**Break 30**	**Lunch**	**Lunch**	**Lunch**	**Lunch**
12:25	Test 15	S 13	S 12	S 11	S 10
12:40	Rotation 5				
12:45	Test 15	S 14	S 13	S 12	S 11
1:05	Rotation 5				
1:10	Test 15	S 15	S 14	S 13	S 12
1:25	Rotation 5				
1:30	Test 15	S 16	S 15	S 14	S 13
1:45	Rotation 5				
1:50	Test 15	S 17	S 16	S 15	S 14
2:05	Rotation 5				
2:10	Test 15	S 18	S 17	S 16	S 15
2:25	Rotation 5				
2:30	Test 15	S 19	S 18	S 17	S 16
2:45	Rotation 5				
2:50	Test 15	S 20	S 19	S 18	S 17
3:05	Rotation 5				
3:10	Test 15	S 21	S 20	S 19	S 18
3:25	Rotation 5				
3:30	Test 15		S 21	S 20	S 19
3:45	Rotation 5				
3:50	Test 15			S 21	S 20
4:05	Rotation 5				
4:10	Test 15				S 21
4:25	Rotation 5				
4:30	**Finish**				

SkillsUSA 2015
Performance Test Inventories
Screen Printing Technology

A. Performance Test Inventories for 30 Contestants at the 2015 Competition:

1. Major Screen Printing Equipment
2. Tools
3. Materials

B. Major Screen Printing Equipment Inventory

1 - HIX Little Pro / 1 Station Manual Rotary Screen Printer and Dryer (WRAPPED FOR SHIPPING)
1 - HIX NP 6-color / 4 Station Manual Rotary Screen Printer (WRAPPED FOR SHIPPING)
1 - HIX E-2408 Electric Conveyor Dryer 220 Volt (INSTALL WHEELS WITH NO CRATE)
1 - HIX TT- 180 Table Top Fluorescent UV Screen Exposure Unit (BOXED)
1 - Washout Booth (BOXED)
2 - HIX SH - 1818 Automatic 18"X18" Spot Heater (BOXED FOR SHIPMENT BY TRUCK)
2 - HIX SD-2632 Screen Dryer 26"X32" 120 Volt (UNBOXED)
1 - HIX Model 750 Tension Meter (from 7 to 50 Newtons/cm)
1 - Reten Field Demo Kit **(Supplied by PSU Screen Print Lab)**
1 – Tension Jack Kit (16789)
30 - HIX 21"X23" Reten Manual Screen Frame that hold a polyester screen. (Screen will be either 140 or 154 mesh count) Each contestant will need one screen.
1 - Screen Coater
10 - HIX 21"X23" Screens with Stencils **(Stored at PSU Screen Print Lab)**
2 - Sets of 3 Screens with Stencils HIX 21"X23" **(Stored at HIX Plant)**
3- Inspection Screens with Stencils **(Supplied by PSU Screen Print Lab)**
3- Tensioning Screens with 154 Mesh Screen Fabric **(Supplied by PSU Screen Print Lab)**

C. Tools Inventory

24 - Eight foot tables **(Supplied by** Kentucky Exposition Center)
20 - Chairs **(Supplied by** Kentucky Exposition Center)
1- Stool for Quality Control Station (Optional)
3 - 20 Minute Timer **(Supplied by Hix)**
10 - Ink Knives
10- Squeegees
2 - ½" Masking Tape Dispenser
2 - Basket (Hanes Shirt Case)
1 - High Pressure Washer **(Supplied by Jess Hudson)**
1 - Garden Hose with Nozzle **(Supplied by Jess Hudson)**
1 - Wet Dry Vacuum **(Supplied by Jess Hudson)**
6 - Pair Safety Glasses
3 - Dozen Ear Plugs
3 - Box of Latex Gloves, Large Size
6 - Clip boards **(Supplied by Jess Hudson)**
24 - 12 Inch Metal Rulers **(Supplied by Jess Hudson)**
1 - T Square
1 - Pantone Color Matching Guides **(Supplied by PSU)**
1 - Assorted Hand Tools Kit
1 - 4 Wheel Dolly
1 - Exposure Booth Ceiling **(Supplied by SkillsUSA on Site)**
1 - Assortment of Extension Cords

Materials Inventory

5 - Cases **White** Hanes Tee Shirts (L Size)
3 - Cases **White** Hanes Tee Shirts (XL Size)
30- Little Pro Rotary Press and Dryer Operation Manuals **(Supplied by HIX Corp.)**
30 - SH16 X16 Automatic Spot Heater Operation Manuals **(Supplied by HIX Corp.)**
30 - 2410 NP II Conveyor Dryer Operation Manuals **(Supplied by HIX Corp.)**
30 - TT- 180 Screen Exposure Unit Operation Manuals **(Supplied by HIX Corp.)**
30 - SD-2632 Screen Dryer 26"X32" 120 Volt Manuals **(Supplied by HIX Corp.)**
30 - Reten Frame Tensioning Assembly Instructions
30 - Reten Frame Tensioning Instruction Sheets for orientation
6 - Rolls of Block Out Tape
1 - Gallon Ulano Emulsion
1 - Gallon Emulsion Remover
1 - Gallon Screen Wash
1 - Gallon Mineral Spirits
1 - Emulsion Remover Spray Bottle
3 - Emulsion Screen Wash Spray Bottle
3 - Cans of **Heat Resistant** Shirt Board Adhesive
1 - Quart of Black Plastisol **(Supplied by PSU)**
1 - Quart of White Plastisol **(Supplied by PSU)**
1 - Quart of Blue Plastisol **(Supplied by PSU)**
1 - Quart of Red Plastisol **(Supplied by PSU)**
1 - Quart of Yellow Plastisol **(Supplied by PSU)**
1 - Quart of Brown Plastisol **(Supplied by PSU)**
1 – Film Positive Art File **(Supplied by PSU)**
1 - Production Specification Packet (Tech Pack) **(Supplied by PSU)**
3 – Sets of 5 shirts for Quality Control Test all with printing defects **(Printed on Site)**
12 - Rolls of Paper Towels
2 - Rolls of ½" Masking Tape
3 - ½" Cellophane Tape Dispenser
48 - Number 2 Lead Pencils
6 - Black Sharpie Permanent Marker
3 - Stapler and Staples
3 - Small Trash Receptacle **(4 - Trash Barrels Supplied by Rubber Maid)**
35 - Contestant Orientation Manuals **(Supplied by HIX)**
30 - Written Test Booklets and 1 - Written Test Answer Key **(Supplied by Jess Hudson)**
30 - Written Test Scantron Sheets **(Supplied by SkillsUSA)**
30 - Oral Assessment Station Rating Sheets **(Supplied by Jess Hudson)**
30 - Printing Station Checklists **(Supplied by Jess Hudson)**
30 - Exposure Station Checklists **(Supplied by Jess Hudson)**
30 - Exposure Checklists **(Supplied by Jess Hudson)**
30 - Reclaiming Checklists **(Supplied by Jess Hudson)**
30 - Quality Control Problem Worksheets with Checklist **(Supplied by Jess Hudson)**
30 - Tensioning & Inspection Station Worksheets with Checklist **(Supplied by Jess Hudson)**
1 – Material Safety Data Sheets Manual **(Supplied by HIX Corp.)**

Image specifications (Tech Pack Page 1)

COMMENTS:	SUPPORT FILES (eps/tif):	TECHNIQUE:	SEASONGROUP: SKILLSUSA	DATE: 3/20/09
	None Needed	3 color flat print	DIVISION: TREE NATIONALS	DR.DESIGNER: Chris Huitt

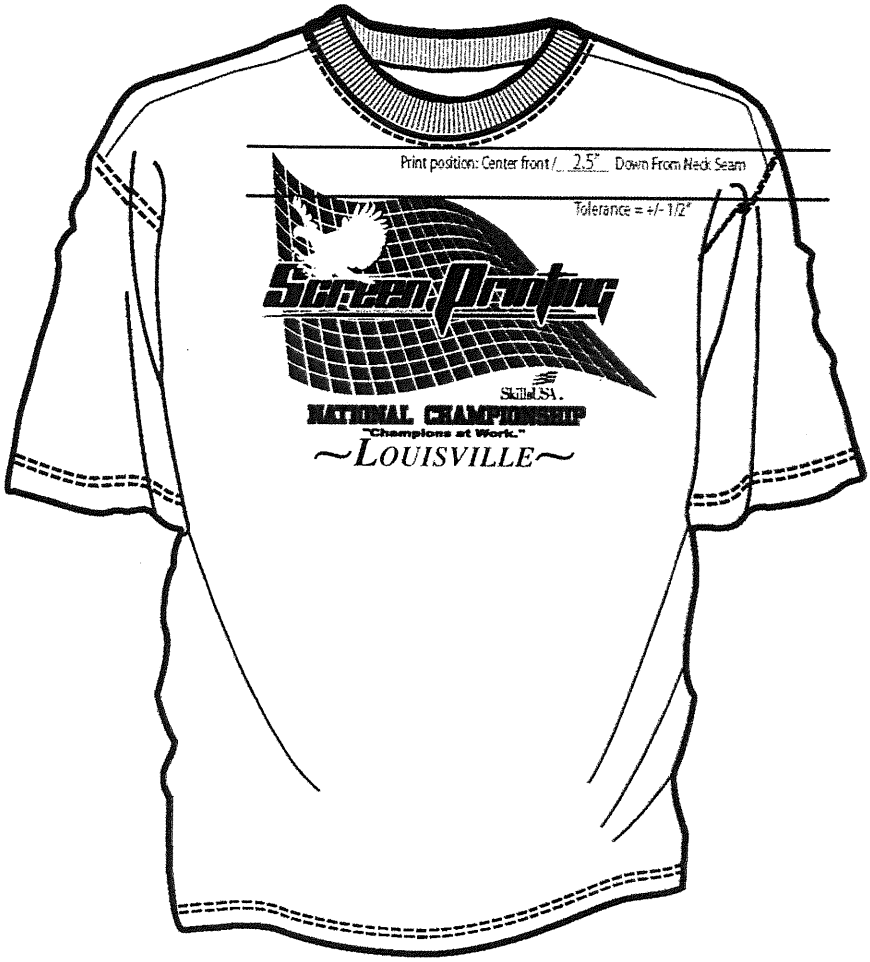

Image specifications (Tech Pack Page 2)

PRINT ORDER
1 PANTONE 541 2 PANTONE 485 3 BLACK

Image Printing Station Design 1

I BELIEVE.

In the American way of life.

In education. In fair play.
Satisfaction is achieved by good work.
In high moral and spiritual standards.

"SkillsUSA: Champions at Work."

46th Annual National Leadership and Skills Conference, Kansas City June 20-June 25, 2010

Print Order

1 GREY 431

2 YELLOW 123

3 BROWN 469

4 HIGHLIGHT WHITE

5 BLACK

Artwork shown not actual size.
Actual width = 10.85"

SkillsUSA®
CHAMPIONSHIPS

CONTEST SCORING CRITERIA

Screen Printing Technology
Contest

Johnny Shell
Chair

Skill Description	Maximum Points
1.Screen Preparation (Tensioning)	100
2.Screen Coating	50
3.Screen Exposure & Washout	100
4.Screen Blockout	50
5.Image Registration	100
6.Image Printing	200
7.Screen Reclaiming	100
8.Quality Control Problem	100
9.Written Knowledge Test	100
10.Oral Professional Assessment	100
11.Total Points	1000
12.	
13.	
14.	
15.	
16.	
17.	
18.	
19.	
20.	
21.	
22.	
23.	
24	
Résumé submitted? Yes X No O (5% penalty)	

Tie Breakers
1. SkillsUSA Professional Development Program Test 2. Number of Salable Garments Printed at the Shirt Printing Station 3.

SkillsUSA
2015 Contest Projects

Sheet Metal

Click the “Print this Section” button above to automatically print the specifications for this contest. Make sure your printer is turned on before pressing the button.

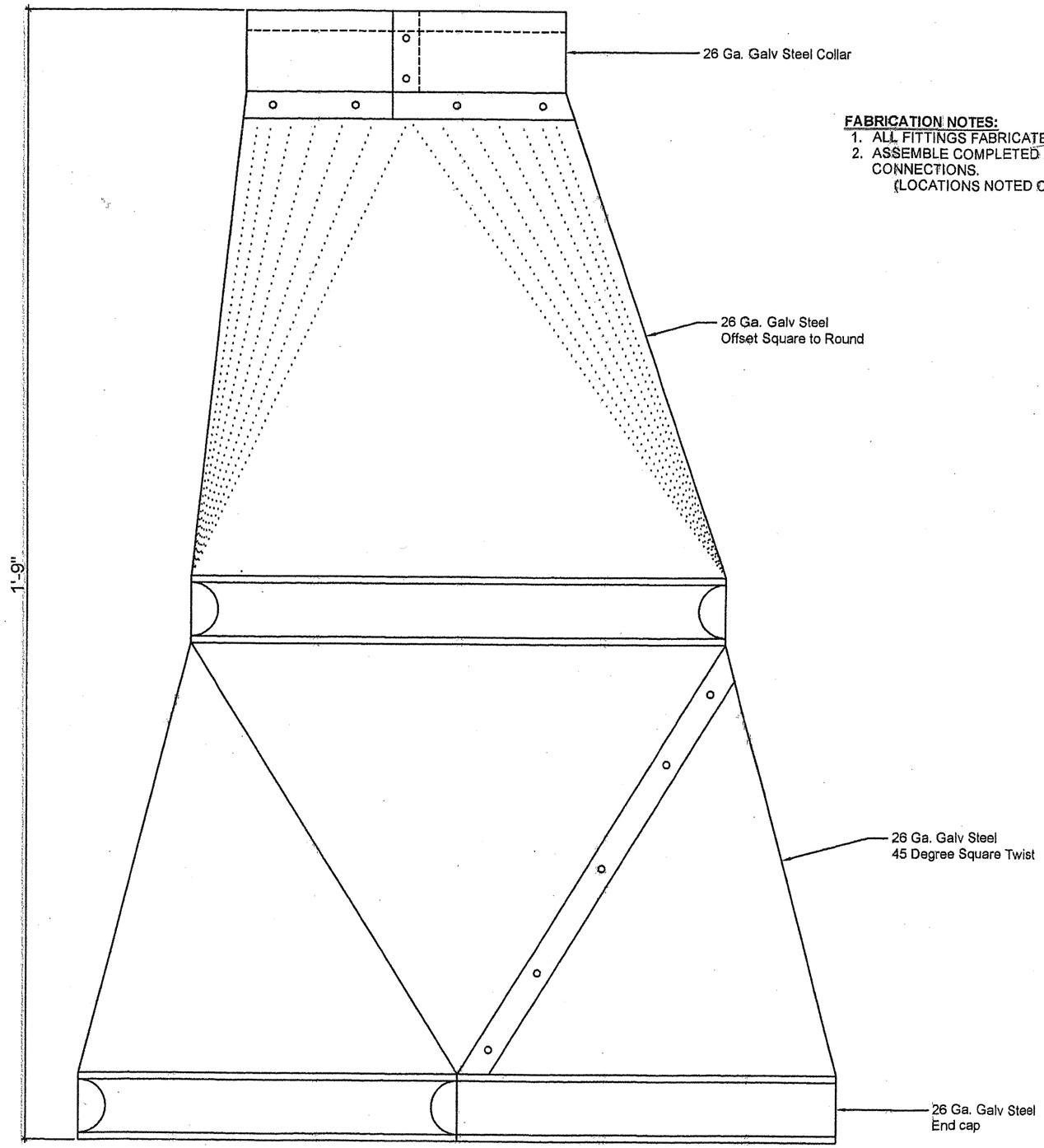

COMPETITION PROJECT ASSEMBLED - ELEVATION VIEW

FABRICATION NOTES:

1. ALL FITTINGS FABRICATED FROM 26 GA. GALV. STEEL
2. ASSEMBLE COMPLETED FITTINGS TOGETHER USING "S" AND DRIVE CONNECTIONS.
   (LOCATIONS NOTED ON INDIVIDUAL FITTING SHEETS)

SkillsUSA
Champions at Work

SHEAR LIST

# OF PCS.	DIMENSIONS			MARK
		x		
		x		
		x		
		x		
		x		
		x		
		x		
		x		
		x		
		x		
		x		
		x		
		x		
		x		
		x		
		x		
		x		
		x		
		x		
		x		

PROJECT DESCRIPTION:

COMPETITION PROJECT

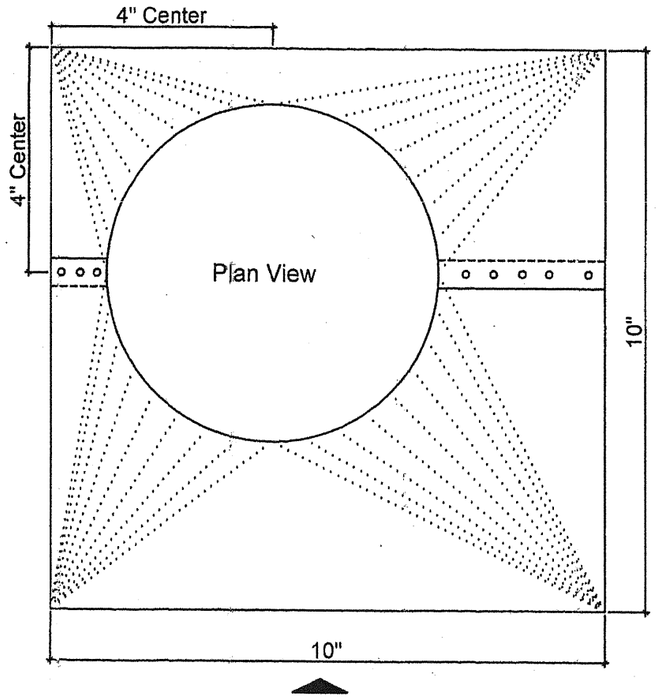

Front Elevation

Side Elevation

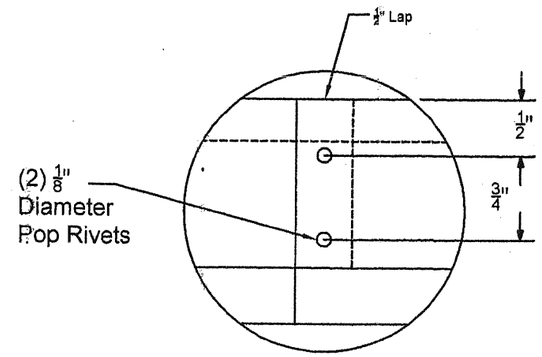

Detail "A"

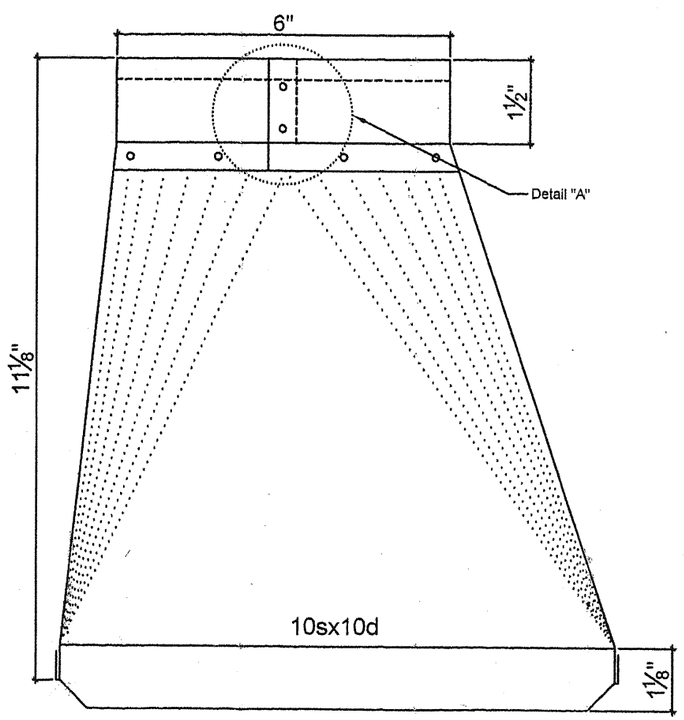

Front Elevation

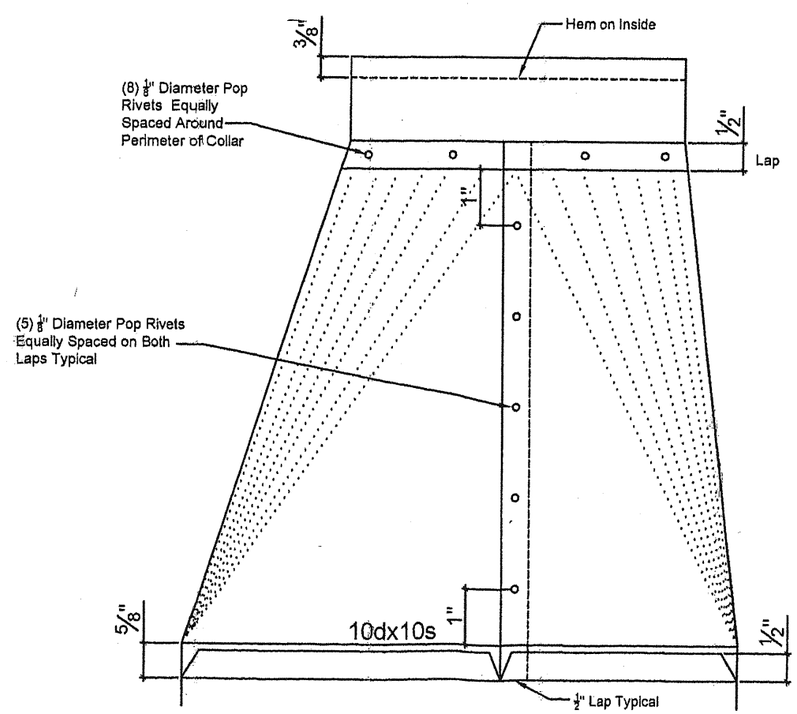

Side Elevation

SkillsUSA
Champions at Work

SHEAR LIST

# OF PCS.	DIMENSIONS			MARK
		x		
		x		
		x		
		x		
		x		
		x		
		x		
		x		
		x		
		x		
		x		
		x		
		x		
		x		
		x		
		x		
		x		
		x		

PROJECT DESCRIPTION:

SQUARE TO ROUND

FABRICATION NOTES:

1. 45° SQUARE TWIST FABRICATED FROM 26 GA. GALV. STEEL.

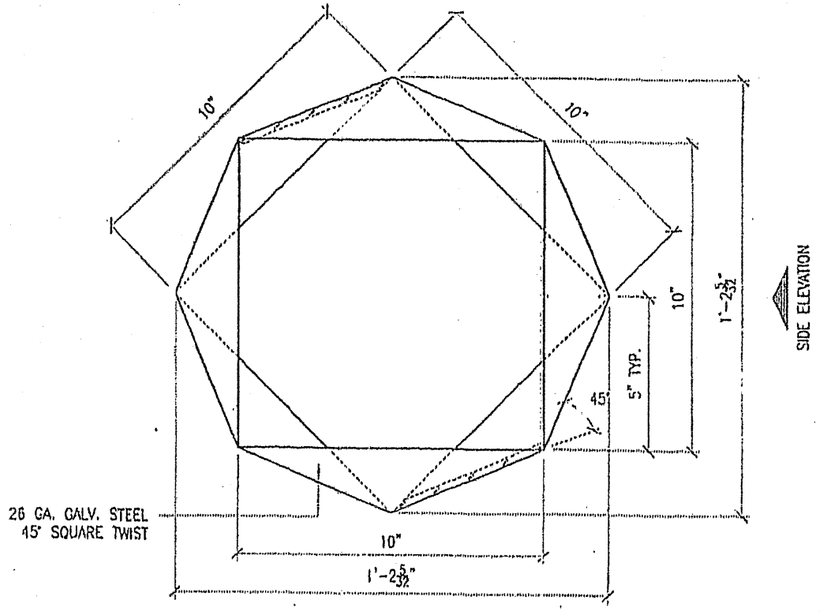

FRONT ELEVATION

PLAN VIEW

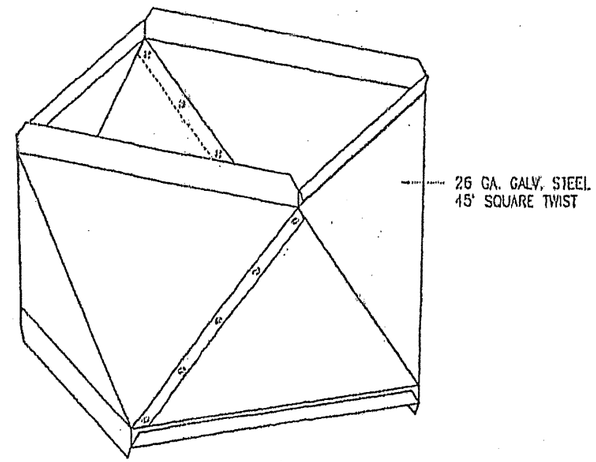

45' SQUARE TWIST – REFERENCE VIEW

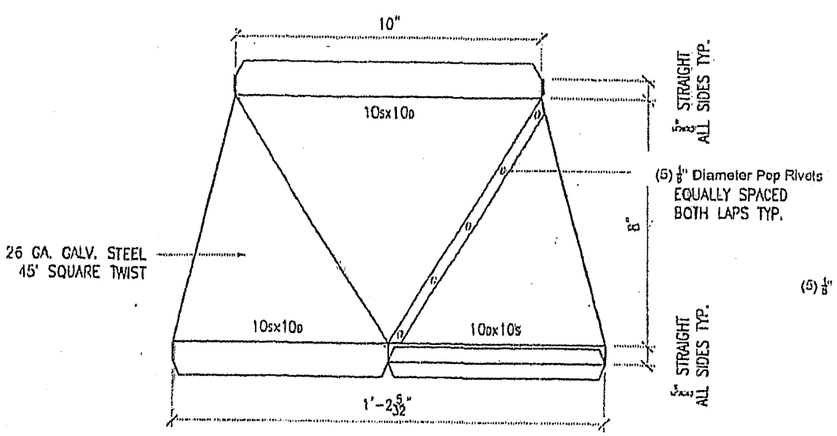

FRONT ELEVATION

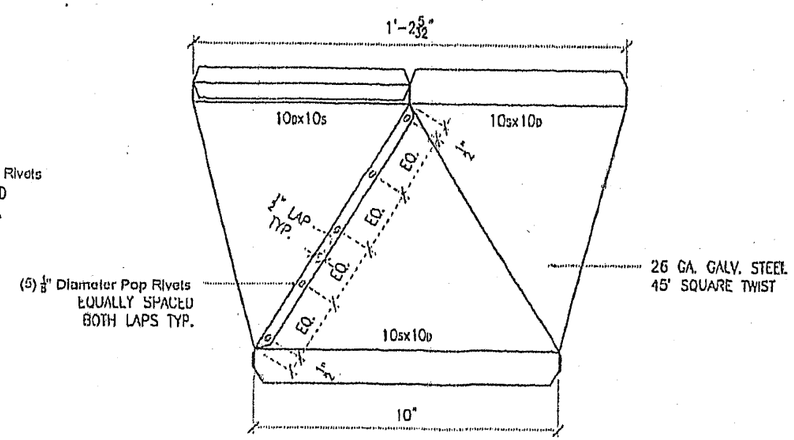

SIDE ELEVATION

SkillsUSA
Champions at Work

SHEAR LIST

# OF PCS.	DIMENSIONS	MARK
	x	
	x	
	x	
	x	
	x	
	x	
	x	
	x	
	x	
	x	
	x	
	x	
	x	
	x	
	x	
	x	
	x	
	x	
	x	
	x	

PROJECT DESCRIPTION:

45° SQUARE TWIST

FABRICATION NOTES:

1. END CAP FABRICATED FROM 26 GA. GALV. STEEL

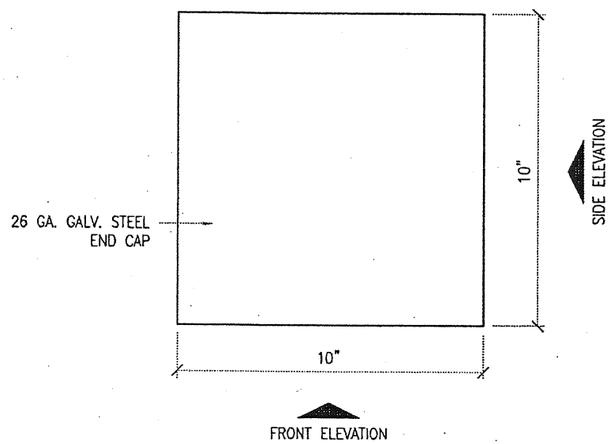

PLAN VIEW

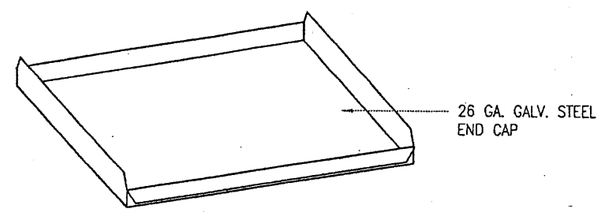

END CAP – REFERENCE VIEW

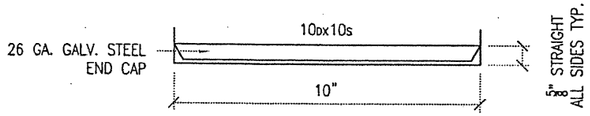

FRONT ELEVATION

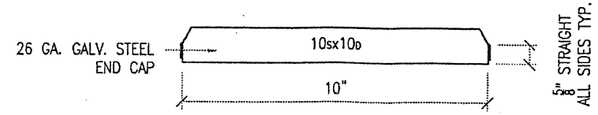

SIDE ELEVATION

SkillsUSA
Champions at Work

SHEAR LIST

# OF PCS.	DIMENSIONS			MARK
		x		
		x		
		x		
		x		
		x		
		x		
		x		
		x		
		x		
		x		
		x		
		x		
		x		
		x		
		x		
		x		
		x		
		x		
		x		
		x		
		x		
		x		
		x		

PROJECT DESCRIPTION:

END CAP

SkillsUSA
2015 Contest Projects

Team Engineering Challenge

Click the “Print this Section” button above to automatically print the specifications for this contest. Make sure your printer is turned on before pressing the button.

2015 TEC Timeline

-tentative-

Wednesday, June 23rd:

8:00am . . .	Contest Welcome
8:10am . . .	Team Written Test - Problem Solving
8:30am . . .	Collect Written Tests Contest Briefing
8:50am . . .	Teams begin worktime
9:00am . . .	TEC Store Opens
9:30am . . .	Round 1 Purchases done (Limited supply) Following completion of Round 1 - Round 2, 3, & 4 begins First-come, First-serve on Rounds 2, 3, & 4
Noon	Day 1 Worktime Ends. Clean up areas, Leave ALL materials/supplies/prototypes in TEC area

Thursday, June 24th:

8:00am . . .	Contestant Worktime in contest area TEC Store Opens
Noon	Lunch provided in contest area
2:30pm . . .	Contestant Worktime ENDS Clean up area & leave TEC Room until Testing timeslot
3:00pm . . .	Judging Begins 3:00pm - Team _____ 3:20pm - Team _____
4:00pm . . .	Debriefing Begins 4:00pm - Team _____ 4:10pm - Team _____
4:30pm . . .	Teams may pick up their supplies, materials, prototypes, etc TEC Contest time done - waiting for awards ceremony :)

Team Engineering Challenge

2015 - National Contest Materials
SkillsUSA
Louisville, KY

WAIT to open
until
Contest Chair gives permission

Contest Description

Your team works for "Wolenda HiWire Company" in Heights Ville, USA. Your team is tasked with designing and developing a scaled prototype for an autonomous delivery system. The potential client, SkillsUSA, has provided criteria, constraints and a scale test model for this system. Your job is to create a device that will travel 18 feet under power and deliver a cargo load *(5 marbles)* properly. The client has requested a test and presentation of your company's solution on Thursday, June 24th. If awarded this job, Wolenda HiWire Company could be receiving some hardware.

Objective: Your team is to;

- Develop a plan for your prototype.
  - Think about materials, effectiveness and your presentation.
  - Include a Budget for your presentation.
  - Create documentation for your pre-planning
- Develop your prototype. Construct, test, improve.
- Develop props, posters, models, etc for use in your presentation…
  - No digital media is to be used in creating or presenting your product line.
- Test your prototype in accordance with the TEC Rubric with the judges.
- Present your prototype in accordance with the TEC Rubric to the judges.

Materials: Your team is ONLY allowed the building/design materials supplied by the 2015 TEC Contest Committee, located in the TEC Store. (you may use your team supplied scissors, exacto knife, rulers, protractors, calculators, writing and/or coloring utinsils and scratch paper. Scratch paper is only for personal team notes).

- Your team received $60 in Plastic Coins to begin today.
  - Teams will NOT get additional coins, lost or stolen - no excuses
  - IF a team is caught trading or stealing coins (or supplies) from another team, they will be disqualified from the 2015 TEC Contest.
- Supplies for everyone are in the TEC Store area and on your "Purchase Sheets"
  - Each supply item has a cost associated with it (per item)
  - Some items have limits on "how many per team allowed."
- Your team is allowed 3 timeslots to purchase materials at no penalty.
  - Time Slot 1: You have until 9:30am today to place your first order!
    - Any items that have "max/team" listed – you cannot buy more than that.
  - Time Slots 2 & 3: after all 1st orders are received, you may order anytime
    - "Max/Team" items no longer matter. If we have extras of anything and you want to purchase them, you can. (First come – First Serve)
  - Time Slots 4 - 8: A 10 point penalty will be applied to your TEC Score for each trip after 3 to the TEC Store.
- Placing Orders for supplies
  - 1 team member from each team should be designated for ordering.
  - Step 1: Complete your order form
    - (White for TimeSlot 1 / Yellow for TimeSlots 2-3 / Green for TimeSlots 4-8)
  - Step 2: Bring your order form to the TEC Store and wait in line.
  - Step 3: Follow the TEC Store Clerk in fullfilling your order.
  - Step 4: Verify your order is correct as it is being fullfilled & Sign order sheet.
  - Step 5: Pay for your order using the TEC Plastic Money
  - Step 6: Take your supplies to your table - they are yours to construct with.

National TEC SkillsUSA Contest Guidelines (continued)

Committee Identified Academic Skills
The technical committee has identified that the following academic skills are embedded in this contest.

Math Skills
None Identified

Science Skills
None Identified

Language Arts Skills
• Provide information in oral presentations
• Demonstrate use of verbal communication skills: choice, pitch, feeling, tone and voice
• Demonstrate use of nonverbal communication skills: eye contact, posture and gestures using interviewing techniques to gain information
• Identify words and phrases that signal an author's organizational pattern to aid comprehension
• Organize and synthesize information for use in written and oral presentations
• Demonstrate knowledge of appropriate reference materials
• Demonstrate understanding of skill

Connections to National Standards
State-level academic curriculum specialists identified the following connections to national academic standards.

Math Standards
None Identified
Source: NCTM Principles and Standards for School Mathematics. To view high school standards, visit: standards.nctm.org/document/chapter7/index.htm. Select "Standards" from menu.

Science Standards
None Identified
Source: McREL compendium of national science standards. To view and search the compendium, visit: www.mcrel.org/standards-benchmarks.

Language Arts Standards
• Students adjust their use of spoken, written and visual language (e.g., conventions, style, vocabulary) to communicate effectively with a variety of audiences and for different purposes
• Students employ a wide range of strategies as they write and use different writing process elements appropriately to communicate with different audiences for a variety of purposes
• Students use spoken, written and visual language to accomplish their own purposes (e.g., for learning, enjoyment, persuasion and the exchange of information)
Source: IRA/NCTE Standards for the English Language Arts. To view the standards, visit: www.ncte.org/standards.

STANDARDS & COMPETENCIES

TEC 1.0 — Perform effectively as team members
- 1.1 Demonstrate group problem-solving techniques
- 1.2 Demonstrate team proficiency in construction of a building project
- 1.3 Perform additional teamwork competencies as determined by the technical committee

TEC 2.0 — Wear appropriate clothing for the national contest
- 2.1 Display clothing that meets national standards for competition
- 2.2 Demonstrate good grooming in dress and personal hygiene

TEC 3.0 – Integrate knowledge of basic engineering principles into technical writing and presentations following the guidelines the contest technical committee has established
- 3.1 Apply engineering knowledge in the areas of force, work, rate, resistance, energy, power, force transformers, momentum, waves and vibrations, energy converters, transducers, radiation, optical systems

TEC 4.0 — Transform existing systems into conceptual models
- 4.1 Transform conceptual models into determinable models
- 4.2 Use determinable models to obtain system specifications
- 4.3 Select optimum specifications and create physical models
- 4.4. Apply the results from physical models to create real target systems
- 4.5 Critically review real target systems and personal performance
- 4.6 Design effective and usable IT-based solutions and integrate them into the user environment
- 4.7 Assist in the creation of an effective project plan
- 4.8 Identify and evaluate current and emerging technologies and assess their applicability to address the users' needs

TEC 5.0 — Showcase knowledge of project planning
- 5.1 Apply brainstorming techniques
- 5.2 Implement benchmarking
- 5.3 Discuss continuous improvement
- 5.4 Explain cause and effect relationships
- 5.5 Apply knowledge of customer satisfaction
- 5.6 Demonstrate how to collect data
- 5.7 Apply decision-making skills
- 5.8 Define and describe a process
- 5.9 Empower team members
- 5.10 Recognize methods of idea generation
- 5.11 Prioritize tasks
- 5.12 Reach consensus amongst the team
- 5.13 Display teamwork during the contest
- 5.13.1 Have equal team participation
- 5.13.2 Show positive group dynamics
- 5.13.3 Define team roles

- Buy Backs. Did you mess up and order more then you needed??? We will purchase back your "in new condition" supplies at 50% original cost.
  (If you paid $5 Plastic Coins – we will give you back $2.50)
- Trading supplies with other teams is not allowed in TEC

Size:

- Your prototype may not be larger then 18" x 18" x 18"

Practice / Testing of your prototype during worktime...

- There is 1 test station for teams to use during worktime.
  - This test station is the "Official Test Station" for TEC 2015.
  - Teams are allowed unlimited practice trials on the station during Work Time.
  - Teams must keep their trials to 2 minutes IF other teams are waiting in line.

Evaluation / Judging Criteria:

- Points will be awarded in accordance with the TEC Rubric in the Contest Guidelines.

- Testing of Devices *(200 points on rubric - breakdown below)*
  - 30 pts = Device is able to sit on the wires on it's own, WITH cargo.
  - 12 pts = Device moves past the start line under power, with cargo
  - 1/2 pt / Inch traveled forward under power, with cargo (18 foot track)
  - 40 pts = Released cargo over the drop zone.
  - 2 pts / cargo item delivered to the bucket.

- Presentations will be graded by a group of industry judges.

SAFETY!!!

- Teams will be using hand & power tools
  (Exacto knives, Scissors, Hot Glue Guns, Hand Saws, Chorded Drill).
  - BE CAREFUL and TAKE YOUR TIME
  - MUST wear safety glasses while using saw and/or drill.

- Be careful when around other contestants not to distract them or injure yourself.

- Horseplay will not be tolerated - act professionally.

Testing

- Your team will have 10 minutes to perform three tests, each 2 minutes long.
  - o When brought into test area, gather your supplies from your table and return to entry area awaiting your turn to test.
  - o When brought to test area – place your prototype on the wires.
    - Your prototype must fit on the wires without support.
  - o When ready to test – let the judges know.
    - Your 2 minute timer will start.
    - You can then load your cargo into your prototype.
    - You can then start your device.
    - Your device has the remaining time to travel to the drop zone and release it's cargo correctly.
  - o Once your 2 minutes are up, the judges will record points and you can reset the device for your 2nd attempt.
  - o This process repeats until you have three attempted runs on the wire.
  - o The judges will record your BEST run on the rubric.

- Upon completion of your test, you will be directed to a Presentation Judging Table.

Presentations: 10 minutes

- Your team will have the FIRST TWO MINUTES for;
  - o Sales Pitch of your _____ to the judges
  - o In this time period YOU will be talking to the judges about why your _____ should be the best…
  - o You may use props, posters, models, etc
  - o Your team WILL BE CUT OFF at 2 minutes

- Your team will have an additional TWO MINUTES to;
  - o Explain how your team came to the conclusion of the final product line.
  - o This is in accordance with the "Interview" section of the TEC Rubric.
  - o You may use props, posters, models, etc.
  - o Your team WILL BE CUT OFF at 2 minutes

- Your team will have a final SIX MINUTES for Q&A from the judges.
  - o Your team will be asked to answer random questions from the judges.
  - o Questions will be about your team work process.
  - o You may use props, posters, models, etc.
  - o Your team WILL BE CUT OFF at 6 minutes.

CONTEST PROCEDURES

1. Contestants will be identified by number only.
2. The Team Written Test will be taken during the pre-contest briefing.
3. The technical committee will provide each team with the problem and the contest supplies at the time of the pre-contest briefing.
4. Each team's "solution" will be constructed on site.
   - a. Construction is ONLY allowed in the contest area and during the contest times as presented in the pre-contest briefing.
5. Contest judges will interview each team as a part of the contest.
   - a. Team interview timeslots will be available during the pre-contest briefing.

SCOPE OF THE CONTEST

Knowledge Performance

- The contest includes a written test to be taken by all members of the team at the same time.

.

Skill Performance

- The demonstration is a presentation of an occupational skill accompanied by a clear explanation of the topic through the use of examples, experiments, displays and practical testing operations.

Contest Guidelines

The Team Engineering Challenge contest will allow SkillsUSA members to demonstrate their ability to work together to solve a problem.

1. The challenge will be selected from an area such as, but not limited to:
   - a. Transportation
   - b. Communications
   - c. Construction
   - d. Manufacturing
   - e. Biotechnology
   - f. Engineering

2. The contestant's advisor/instructor must attend the mandatory orientation meeting with the contestant.

3. Contestants will not take the skills-related written or Professional Development Test as outlined in the general regulations.

4. Tie Breaker — Tie will be broken by reviewing the Highest score from the team rubrics. If tie is not broken from option a, then option b and c will be looked at in order.
   - a. "Solution: Performance"
   - b. "Interview: Problem Solving / Team Work"
   - c. "Written Test score"

National TEC SkillsUSA Contest Guidelines

PURPOSE

This contest is designed to evaluate and to recognize outstanding students for excellence and professionalism in the areas of creative and critical thinking skills and the decision making process, to solve a problem. The contest is intended to foster creativity, innovation, team work, and problem solving skills.

GENERAL REGULATIONS

CLOTHING REQUIREMENT

For men: Official blazer, jacket or sweater; black dress slacks; white dress shirt; plain black tie with no pattern or SkillsUSA black tie; black socks and black shoes.

For women: Official blazer or jacket; black dress skirt (knee-length) or slacks with business like white, collarless blouse or white blouse with small, plain collar that may not extend onto the lapels of the blazer; black sheer or skin-tone seamless hose and black dress shoes.

These regulations refer to clothing items that are pictured and described at: www.skillsusastore.org. If you have questions about clothing or other logo items, call 800-401-1560 or 703-956-3723.

Note: Contestants must wear their official contest clothing to the contest orientation meeting.

ELIGIBILITY

This contest is open to active SkillsUSA members enrolled in a middle school chapter (grades 6-8). A team consists of 3 students from the same local chapter.

Teams must qualify from their local state conference.

OBSERVER RULE

Observers will be allowed to watch the match providing space is available. No talking or gesturing will be permitted. The event chair or moderator may remove observers and/or close the event to observers for cause.

EQUIPMENT AND MATERIALS

1. Supplied by the technical committee:
   a. All tools, materials, and supplies necessary to solve the contest problem except those items listed under number two below
      i. Such items may include: hack saw, glue guns, cordless drill.
   b. All necessary information and furnishings for judges and technical committee
2. Supplied by the students:
   a. Drawing equipment (team's choice - for example: ruler, straightedge, t-square, triangle, scale, pencils, pens, compass, etc…)
   b. Safety glasses
   c. Calculator
   d. Scissors
   e. Exacto-knife or equivalent
   f. Coloring / Writing utinsels (Markers, Crayons, Colored Pencils, etc)
      i. Paint is not allowed.
   g. Students are not allowed materials that will "add" to their prototype.
      i. Tape, glue, paper, staples, paper clips, etc
   h. Other tools as listed on the contest update page of the national website

National TEC SkillsUSA Contest RUBRIC

	EVALUATED ITEMS	Points Possible	Points earned	REMARKS
Pre-Contest Briefing	WRITTEN TEST General understanding of the; Problem-Solving Process, Engineering Design Process and Technical Skills related to the Team Engineering Challenge contest guidelines.	50		This is a "team test"
Contest Time	Pre-Planning; sketches, brainstorming, plan	100		
	Materials Order Form(s)	50		1st Order Form -0pts 2nd Order Form -10pts 3rd Order Form -20pts
	Use of Workflow • ex: Did team work together? • ex: Did team utilize testing opportunities?	100		
INTERVIEW / TESTING	INTERVIEW: Presentation / Sales Pitch • ex: Does the solution meet the Client's goals? • ex: Does the team explain their solution? • ex: Did the team use visual aids?	100		Interview process is generally 5-7 minutes in length
	INTERVIEW: Problem Solving / Team Work • ex: How did the team overcome a challenge? • ex: Did everyone contribute? • ex: Did team improve their solution through testing? • ex: Did team explore more than one solution? • ex: Did team discuss +/- of various solutions?	150		
	SOLUTION: Prototype / Construction • ex: Creativity/Originality • ex: Workmanship - thoughtfulness of design, care and quality of construction	150		Testing of prototypes will be done in front of judging panel. 2-3 minute time frame for test.
	SOLUTION: Performance • Application - practicality, function (does it do what it's supposed to do?)	200		
	Clean-Up	50		
	SUBTOTAL	1,000		
PENALTY POINTS	Material Penalty	0 to -50		
	Clothing Penalty	0 to -50		
	Remove Penalty	0 to -10		
	Team Member Penalty	0 to -50		(Team of 3)
TOTAL		1,000		

TEC Supply Store

Items shown correspond with the Order Forms & Display Board
Round 1: Quantities guaranteed
Rounds 2-8: First Come / First get...

4: Design, sketch and document a Rube Goldberg machine with at least 5 steps that opens your front door while you are sitting on the couch. Artistic quality not graded. An example is provided of a Rube Goldberg machine. *(15 pts)*

2015 SkillsUSA National Competition

Team Engineering Challenge

Middle School

Team #: _____ _____

(1pt) 50 pts

DO NOT OPEN UNTIL TOLD TO

Written Test – (50 pts total)

This is a team test, your members may work together to answer this test and submit as one team test for one score.

This is a timed test – your team will start when the contest committee says to, and you are to stop writing when the contest committee says to.

1: below are 6 steps from one style Design Process. Put the following steps in order from 1 to 6. *(12 pts)*

(Write in the blanks provided, 1 for first and 6 for last)

___Evaluate and select solution.

___ Define problem.

___ Test and document solution.

___ Brainstorm.

___ Design and build solution.

___ Repeat process until satisfied with solution.

2: Imagine your team is working on a project, following the above Design Process, to solve a problem. After selecting your solution, one of your team members storms out of the room. List 3 ways to engage this team member to help the team complete their solution. *(4 pts each)*

A:

B:

C:

3: Describe a personal experience you have had with one of the previous six steps. Explain the importance of that step in your particular scenario. *(10 pts)*

Team #

___ 4th Order ___ 5th Order ___ 6th Order ___ 7th Order ___ 8th Order

	Items	Price	Qty	Total Price	
A-1	Rubber Bands (Size Varies)	2 for $1			A-1
A-2	QueTips	2 for $1			A-2
A-3	Toothpick	2 for $1			A-3
A-4	Small Paperclip	2 for $1			A-4
A-5	Pipe Cleaner	2 for $1			A-5
A-6	Balloon	2 for $1			A-6
A-7	Glue Stick	2 for $1			A-7
A-8	Small Popsicle Stick	2 for $1			A-8
B-1	Zip Tie	$1			B-1
B-2	Straw	$1			B-2
B-3	Spoon	$1			B-3
B-4	Roller Wheels	$1			B-4
B-5	Metal Latch	$1			B-5
B-6	Sand Paper	$1			B-6
B-7	Pink Cardstock Paper	$1			B-7
B-8	Green Cardstock Paper	$1			B-8
B-9	White Printer Paper	$1			B-9
B-10	Blue Cardstock Paper	$1			B-10
B-11	Paper Plate	$1			B-11
B-12	12" of Wire (Red or Black)	$1			B-12
B-13	Plastic Cup	$1			B-13
B-14	Large Popsicle Stick	$1			B-14
B-15	Clothes Pin	$1			B-15
B-16	Compact Disc	$1			B-16
B-17	Large Paper Clip	$1			B-17
B-18	Plastic Lid	$1			B-18
B-19	3 feet of Black Yarn	$1			B-19
B-20	3 feet of Pink String	$1			B-20
B-21	3 feet of White String	$1			B-21
C-1	4" x 4" x 1/4" Pink Foam Square	$2			C-1
C-2	Plastic Tube	$2			C-2
C-3	Cardboard Tube	$2			C-3
C-4	1/8 x 1/2 x 9 inch Pine Stick	$2			C-4
C-5	Battery Clip	$2			C-5
C-6	Switch	$2			C-6
D-1	Roll of Clear Tape	$3			D-1
D-2	3.5" x 12" x 1/4" Wood Sheet	$3			D-2
D-3	3/16" x 12" Wood Dowel	$3			D-3
D-4	1/8" x 1/2" x 15 inch Pine Stick	$3			D-4
D-5	8.5" x 11" x 1/4" Pink Foam Sheet	$3			D-5
D-6	10" x 12" Cardboard Sheet	$3			D-6
E-1	Large Motor	$5			E-1
E-2	Medium Motor	$5			E-2
E-3	9 Volt Battery	$5			E-3
			total price =		

Team #

___ 4th Order ___ 5th Order ___ 6th Order ___ 7th Order ___ 8th Order

	Items	Price	Qty	Total Price	
A-1	Rubber Bands (Size Varies)	2 for $1			A-1
A-2	QueTips	2 for $1			A-2
A-3	Toothpick	2 for $1			A-3
A-4	Small Paperclip	2 for $1			A-4
A-5	Pipe Cleaner	2 for $1			A-5
A-6	Balloon	2 for $1			A-6
A-7	Glue Stick	2 for $1			A-7
A-8	Small Popsicle Stick	2 for $1			A-8
B-1	Zip Tie	$1			B-1
B-2	Straw	$1			B-2
B-3	Spoon	$1			B-3
B-4	Roller Wheels	$1			B-4
B-5	Metal Latch	$1			B-5
B-6	Sand Paper	$1			B-6
B-7	Pink Cardstock Paper	$1			B-7
B-8	Green Cardstock Paper	$1			B-8
B-9	White Printer Paper	$1			B-9
B-10	Blue Cardstock Paper	$1			B-10
B-11	Paper Plate	$1			B-11
B-12	12" of Wire (Red or Black)	$1			B-12
B-13	Plastic Cup	$1			B-13
B-14	Large Popsicle Stick	$1			B-14
B-15	Clothes Pin	$1			B-15
B-16	Compact Disc	$1			B-16
B-17	Large Paper Clip	$1			B-17
B-18	Plastic Lid	$1			B-18
B-19	3 feet of Black Yarn	$1			B-19
B-20	3 feet of Pink String	$1			B-20
B-21	3 feet of White String	$1			B-21
C-1	4" x 4" x 1/4" Pink Foam Square	$2			C-1
C-2	Plastic Tube	$2			C-2
C-3	Cardboard Tube	$2			C-3
C-4	1/8 x 1/2 x 9 inch Pine Stick	$2			C-4
C-5	Battery Clip	$2			C-5
C-6	Switch	$2			C-6
D-1	Roll of Clear Tape	$3			D-1
D-2	3.5" x 12" x 1/4" Wood Sheet	$3			D-2
D-3	3/16" x 12" Wood Dowel	$3			D-3
D-4	1/8" x 1/2" x 15 inch Pine Stick	$3			D-4
D-5	8.5" x 11" x 1/4" Pink Foam Sheet	$3			D-5
D-6	10" x 12" Cardboard Sheet	$3			D-6
E-1	Large Motor	$5			E-1
E-2	Medium Motor	$5			E-2
E-3	9 Volt Battery	$5			E-3
			total price =		

	EVALUATED ITEMS	Points Possible	Points earned	REMARKS
Pre-Contest Briefing	**WRITTEN TEST** General understanding of the; Problem-Solving Process, Engineering-Design Process and Technical Skills related to the Team Engineering Challenge contest guidelines.	50		This is a "team test"
Contest Time	Pre-Planning; sketches, brainstorming, plan Materials Order Form(s)	100 50		1st Order Form -0pts 2nd Order Form -10pts 3rd Order Form -20pts
	Use of Worktime • ex: Did team work together? • ex: Did team utilize testing opportunities?	100		
INTERVIEW / TESTING	**INTERVIEW: Presentation / Sales Pitch** • ex: Does the solution meet the Client's goals? • ex: Does the team explain their solution? • ex: Did the team use visual aids?	150		Interview process is generally 5-7 minutes in length
	INTERVIEW: Problem Solving / Team Work • ex: How did the team overcome a challenge? • ex: Did everyone contribute? • ex: Did team improve their solution through testing? • ex: Did team explore more than one solution? • ex: Did team discuss +/- of various solutions?	150		
	SOLUTION: Prototype / Construction • ex: Creativity/Originality • ex: Workmanship - thoughtfulness of design, care and quality of construction	150		Testing of prototypes will be done in front of judging panel. 2-3 minute time frame for test.
	SOLUTION: Performance • Application - practicality, function (does it do what it's supposed to do?)	200		
	Clean-Up	50		
	SUBTOTAL	1,000		
PENALTY POINTS	**Material Penalty**	0 to -50		
	Clothing Penalty	0 to -50		
	Resume Penalty	0 to -10		
	Team Member Penalty	0 to -50		*(Team of 3)*
TOTAL – ROUND 1		1,000		

SkillsUSA
2015 Contest Projects

TeamWorks

Click the “Print this Section” button above to automatically print the specifications for this contest. Make sure your printer is turned on before pressing the button.

TeamWorks

Competitors Manual
2015

Major Sponsors

Bosch Power Tools

NewellRubbermaid

State Farm Insurance

Lowe's

Advisory Sponsors

Bill Robinson Train2Build.COM

NARI

Program & Contributing Sponsors

Bricklayer's Association

CEMCO

Charlotte Pipe and Foundry Company

Copper Development Association

Grabber

IEC

Maze

Mortar Net

Multiclip

Pactiv

Protecto Wrap

Quikrete

Simpson Strong Tie

Southwire

Print instructions

- Please produce “Competitor Manual 2015
- Complete and bind with Plastic Spirals
- Please print 60 copies of the 2015 Manual
- Front and back cover in color
- Print the Power tool section (2 Teamworks power too catalog.pdf) and the hand tool section(1 TeamWorks Hand Tool Catalog.pdf) in color
- All other sections Black and White
- All 8-1/2” x 11” .
- Print Plans “Teamworks plans 2015.pdf” on 11” x 17” paper folded to 8 1/2” x 11” and placed in an envelope.

Questions, call Dan Taddei or Elsie Iturralde at 847 298-9200

COMPETITOR MANUAL 2015 – BINDER TABS (5-POSITION TABS)

1 Contents

2 Sponsors

3 TeamWorks

4 Schedule

5 Plumbing Skill Check

6 Electrical Skill Check

7 Plans

8 Safety

9 Spec Sheets

10 Tear Down

11 Tools

12 Forms

Sub Tab Positions for under the “Spec Sheets” Tab
TeamWork’s Participant Binder
2015

1. **DriShield**
2. **Total Flash**
3. **Total Flash Install**
4. **HouseNet 1**
5. **Pella Window**
6. **Window Sealing Tape Detail**
7. **Window Sealing Lit**
8. **Simpson HDU2**
9. **Jamsill**
10. **Hardieplank**

Table of Contents

1) Contents

2) Sponsor's
Sponsors

3) TeamWork's
About TeamWorks ..... pg. 1
Schedule of Events ..... pg. 2
Rules and Regulations ..... pg. 3
Judging Criteria ..... pg. 9

4) Schedule

5) Plumbing Skill Check

6) Electrical Skill Check

7) Plans
Project Plans

8) Safety

9) Spec Sheets
1. Dri-Shield Product Sheet
2. Total Flash
3. Total Flash Corner
4. HouseNet1
5. Alside Window Install
6. Window Sealing Tape Detail
7. Window Sealing Tape Lit
8. Simpson HDU2
9. Jamsill Guard Brochure
10. Hardieplank HZ10 Installation guide

10) Tear Down

Tear Down Plan

11) Tools

Hand tools
Power tools

12) Forms

Change Order Forms
Tool Check-in Forms

Major Sponsors

Bosch Power Tools

NewellRubbermaid

State Farm Insurance

Lowe's

Advisory Sponsors

Bill Robinson Train2Build.COM

NARI

Program & Contributing Sponsors

Bricklayer's Association

CEMCO

Charlotte Pipe and Foundry Company

Copper Development Association

Grabber

IEC

Maze

Mortar Net

Multiclip

Pactiv

Protecto Wrap

Quikrete

Simpson Strong Tie

Southwire

About TeamWork's

TeamWork's was introduced at the 2000 SkillsUSA Championships in Kansas City to promote and establish a model for "best in class" communication and coordination between trade disciplines; to support and develop skilled personnel capacity within the building trade disciplines; to encourage, recognize and celebrate the most talented young people who have elected a building trade career path; and, to strengthen the link between industry needs and building trade technology and management curriculum.

TeamWork's is a competition where teams of four, with training in carpentry, electrical, plumbing and masonry, compete in planning, scheduling and building a project over a two-day period, in a simulated real-world situation. This two-day competition places a special emphasis on individual trades with students working collaboratively to coordinate all phases of project execution.

The Technical Committee's Mission Statement is;

To provide a learning experience for all participates where they demonstrate relevant competencies that meet the changing needs of industry.

Rules & Regulations

Purpose
TeamWork's is a competition to evaluate team preparation for employment and to recognize outstanding students for excellence and professionalism in the fields of residential carpentry, masonry, plumbing, electrical and teamwork skills.

Refer to the General Regulations in the SkillsUSA Championships Technical Standards.

Clothing Requirement
Official SkillsUSA khaki work shirt and pants, black or brown leather work shoes, and safety glasses with side shields or goggles. Safety prescription glasses can be used only if they are equipped with approved side shields. If not, they must be covered with goggles. To purchase official work clothes, order online at:
http://www.skillsusastore.org/skillsusa/welcome.asp or call 800-401-1560.

Eligibility
Open to a team of four SkillsUSA members enrolled in program(s) with building trades as the occupational objective. Two contestants from each team will be required to have an **OSHA Certification** prior to competition. Judges will check for OSHA certification during the team presentations. For every additional member with the OSHA Certification additional points will be awarded to the team. You can learn more about OSHA Certification at http://skillsusa.org/programs/careersafe-online-safety-training/

Safety Requirement
Both the instructor and the contestants certify, by their enter in this contest, that the contestants have received instructions and have satisfactorily passed an examination on the safe use of portable electric power tools (including cordless) and all hand tools. The contestants are responsible for inspecting the tools supplied and that they are in safe working condition. Further, they agree that SkillsUSA, Inc. the SkillsUSA Championships Technical Committees, volunteers and the national judges are released from all responsibility relating to personal injuries resulting from their use. Contestants will be removed from competition if proper training has not been provided and/or they are use the equipment in an unsafe manner.

Equipment and Materials
The Technical Committee will supply all equipment, materials and all necessary tools. Contestants who wish to use their own tool belt may do so after Technical Committee approval. If a contestant does not bring their own tool belt one will be provided by the Technical Committee. Any tools that contestants will be required to bring will be published in the April Update (published on www.skillsusa.org annually on April 15 and distributed to state association directors by SkillsUSA).

Scope of Contest
Each team will be given the project manual at the Teamworks Orientation Meeting and given 30 minutes to meet as a team, analyze the manual and formulate a written action plan. Each team will prepare and conduct a 5 to 7 minute professional presentation to the judges on how their team plans to accomplish the project. Every team member will be required to have an active part in the presentation. The written action plan and the presentation will be judged.

Contestants will demonstrate their ability to perform jobs and skills selected from the following list of competencies considered essential by the SkillsUSA Championships Technical Committee. Committee members include: Robert Bosch Tools Corporation, NewellRubbermaid, Train2Build, National Association of the Remodeling Industry, State Farm Insurance Companies and Lowe's.

Contest Elements

I. Team Action Plan and Presentation

a. Analyze the project manual
   - Understand overall project requirements
   - Interpret project drawing and determine dimensions from multi-views to understand what will be required to "complete" the project.
   - Interpret specifications, abbreviations, symbols and drawing notes
   - Interpret oral and written changes, as possibly communicated, per the Orientation Meeting
   - Prepare material "Take-Off" from blueprint

b. Write the action plan and give a presentation
   - Be able to organize, prepare and present an action plan
   - Use of data display instruments such as flow chart or cause and effect diagrams is recommended (reference Total Quality Curriculum)
   - As a team, develop a presentation that is 5 to 7 minutes long portraying how your team will accomplish the building project including the team's safety plan
   - Use of visuals is permitted. Each team will be provided with a flip chart, stand and markers for this component

II. Teamwork

- Safety FIRST in use of all ladders, tools, etc.
- Demonstrate the ability to work as a team
- Demonstrate group problem solving techniques
- Demonstrate team proficiency in construction of a building project
- Other teamwork competencies as determined by the Technical Committee
- Show ENTHUSIASM and CONFIDENCE

III. Trade Skills

Carpentry

a. Materials, Estimating and Tools
   - Identify, receive and inspect materials
   - Store lumber and other materials properly
   - Use the correct amount of materials for the project in the correct manner

- Correctly identify and use carpentry hand and power tools in a safe manner

b. Rough Framing
   - Understand elements of the plan details
   - Use of dimensional and engineered wood products and steel products
   - Frame and brace walls to include corners, openings, trimmers, cripples, partitions, plumbing partitions, fixture backing and sheathing
   - Calculate and use the rise and run of a common roof
   - Layout a common roof plan
   - Lay out, cut and install common rafters, ridge board, ceiling joists and collar ties

c. Finish Carpentry
   - Install interior door unit plumb and square
   - Install interior trim to include miter cuts and or copped joints
   - Install siding and related trim pieces
   - Install windows to include weather resistant barrier and flashing

Masonry

a. Materials, Estimating and Tools
   - Arrange masonry materials for efficient use
   - Place mortar pans properly
   - Keep areas neat and organized
   - Estimate amount of brick, block, mortar mix and sand to be used
   - Correctly identify and use masonry hand and power tools in a safe manner

b. Tooling and Polishing Joints
   - Tool concave, rake weather, V-jointer, grapevine and struck joints
   - Polish the joints
   - Tuck-point a wall
   - Brush and touch up a wall

c. Lay a Brick/Block Wall
   - Lay out a wall in preparation for building a straight and/or corner wall
   - Spread and furrow mortar correctly for brick units
   - Construct a straight wall
   - Construct an outside and inside corner lead
   - Spread bed joints and throw on full head joints for block units

- Build a block corner to a specified height
- Properly install lintels and moisture drainage such as masonry flashing and wee holes
- Be prepared to install brick detailing

Plumbing

a. Materials, Estimating and Tools
   - Determine type and amount of materials needed
   - Store materials correctly around work area
   - Identify fittings from a isometric drawing of a plumbing system
   - Correctly identify and use plumbing hand and power tools in a safe manner

d. Rough In
   - Calculate the slope required for waste and vent lines
   - Rough in waste and vent lines for sinks, lavatories, bathtubs, showers and water closets
   - Secure horizontal and vertical lines of pipe to wood, metal or masonry surfaces
   - Rough in water supply lines for sinks, lavatories, bathtubs, showers and water closets
   - Perform pressure tests on water supply system

e. Joining Pipes
   - Cut, ream and join copper tubing using the sweat method
   - Cut, ream and join copper tubing using the compression method
   - Cut, ream and join CPVC and other similar pipe
   - Cut, ream and join PVC pipe
   - Cut, ream and join ABS pipe
   - Cut, ream and join copper tubing by sweat, compression or other methods

Electrical

a. Materials, Estimating and Tools
   - Use and apply the current National Electrical Code
   - Plan work and lay out electrical installations
   - Select proper amount and size of materials
   - Correlating specifications, prints and job sites
   - Correctly identify and use electrical hand and power tools in a safe manner

b. Rough In
   - Choose size and install ganged, octagon and surface mount boxes to a specified height
   - Install and staple all electrical wire essentially free from hazard according to a blueprint
   - Make all necessary splices and junctions in boxes
   - Install distribution panel with main disconnect and breakers

c. Device and Fixture Installation
   - Install the following devices:
     - Single pole switch
     - Three-way switch
     - Duplex grounded receptacle
     - Ground fault circuit interrupter
     - Light fixtures
   - Install wall plates

Other Competencies That May Be Considered

- Conduit in the electrical unit
- Troubleshooting the electrical circuits
- Installing plumbing fixtures
- Installing electric fixtures
- Repair or replace a P trap
- Brick/block composite wall
- Exterior or interior carpentry finish work
- Install shingles
- Install window(s)
- Install door(s)
- Install underlayment
- Install floor coverings
- Install insulation
- Install finished trim

Rules & Regulations

Team Presentation Judging Criteria
The presentation phase is designed to evaluate the team's awareness and understanding of "non-physical" and "non-technical" expectations. It is intended to reinforce the need for the participants to develop a broad range of physical and non-physical skills needed in order to achieve success. Scoring will be based on a team presentation made to the judges.

Trade Specific Judging Criteria
The construction phase of the TeamWork's competition will be evaluated using the criteria from score sheets located in the SkillsUSA Championships Technical Standards. For example, the carpentry portion of the competition will be judged using the same criteria from the score sheet as the Carpentry Rules in the Technical Standards. The plumbing portion of the competition will be judged using the Residential Plumbing score sheet in the Technical Standards, etc.

Professionalism and Respect
Teamworks not only stresses the physical construction portion of the competition, but also the leadership and social aspect, which you will encountered in your future job environments. This is very important and stressed during the entire competition by the Technical Committee, judges, volunteers and most importantly…yourselves. Professionalism and respect is critical in order for everyone to be 1) ALWAYS SAFE, 2) experience a fair competition, 3) have a learning environment, 4) be considerate of each other's talents, 5) HAVE FUN! Please take this experience serious to do your "BEST", but have "FUN" doing it!

CONGRATULATIONS on being HERE!!!!!!

COMPETITION SCHEDULE

Tuesday June 23rd

11:00pm – 12:00am Orientation (Lunch will be served for students)

12:00am – 2:00pm Team Presentations
Refer to Schedule Grid for Your Team's Location & Time

2:00pm – 3:00pm Site Visit – teams are allowed to visit their site and inspect their tools

Wednesday, June 24th

8:00am – 2:00pm Competition Build

Thursday, June 25th

8:00am – 5:00pm Competition Build

5:00pm – 5:15pm Site Visit – teams, instructors and family members are allowed to visit their site for an up-close look at the project,

Friday, June 26th

7:45am – 8:00am Site Visit – teams, instructors and family members are allowed to visit their site for an up-close look at the project and photos

8:00am – 12:00pm Demolition – all teams must demolish their project, collect and return their tools. Only students are allowed on the site during demolition

12:00pm – 1:00pm Debrief

(Lunch will be served for students and their instructors)

TeamWork's Plumbing Skill Check

In addition to the plumbing elements of the project, the plumber will have to complete a "Plumbing Skill Check". This will be graded and is part of the project team score.

The Plumbing Skill Check schedule will be posted during the Orientation Meeting. At the assigned time, the plumber will proceed to the Plumbing Skill Check area. All required tools will be provided in the skill check area. You will stay in this area while performing the skill check. You will cut all pipe, have your cut pipe checked and then solder your project. Your project will be checked for size and tested for leaks with an air hose while submerged in a bucket of water. Deductions will be made for lack of quality of work, incorrect size, and air leaks.

Competitors are given the following:

1. One ½" copper Type M 48" long (Note to Committee, pipe must be cut to exactly the same length for all teams)
2. 6 pcs ½" 90° Ells wrot
3. 3 pcs ¾ X ¾ X ¾ Tee wrot
4. 1 pc ½ wrot X ½ NFP Female adapter
5. 2 ' solder
6. Flux with brush
7. Rag
8. Pipe Cuter
9. Reamer
10. Torch

Requirements:

1. Competitors will cut, ream, and clean all pipe and fittings and submit for review.
2. Following review they will be instructed to solder and submit for final grading.
3. At final grading, their project will be measured for base dimensions and height of horizontal section.
4. You will attach an air hose fitting to your project.
5. Judge will set your project in a test fixture, if it fits you get points if it does not fit no point are granted.
6. Judge hooks up air hose at 100 PSI and sets project in bucket of water, there should not be any air bubbles from fittings.

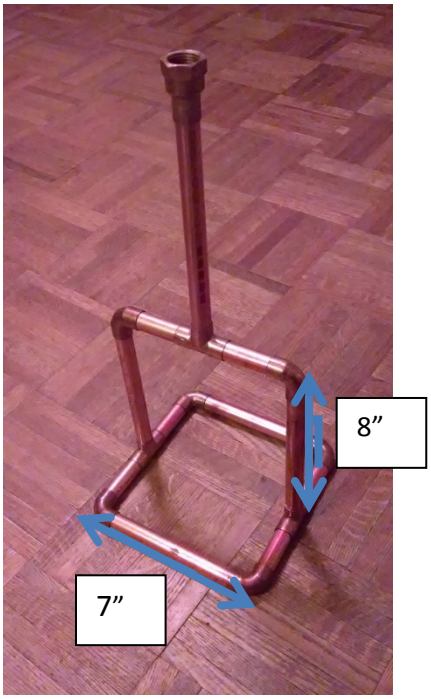

TeamWork's Electrical Skill Check

In addition to the plumbing elements of the project, the electrician will have to complete a "Electrical Skill Check". This will be graded and is part of the project team score.

The Electrical Skill Check schedule will be posted during the Orientation Meeting. At the assigned time, the electrician will proceed to the Electrical Skill Check area. No tools will be required. You will stay in this area while performing the skill check.

You will diagnose an electrical problem, identify the example that corresponds with the problem, and indicate the proper solution (i.e. how to fix it). Deductions will be made for not diagnosing the electrical problems correctly.

You will have 10 minutes to complete seven (7) problems.

2015 NATIONAL TEAMWORKS COMPETITION

http://www.skillsusaca.org/content/teamworks

Title Sheet		
Date	January 22, 2015	T000
Drawn by	Sophie C.H. Reich	

4/10/2015 7:30:13 PM

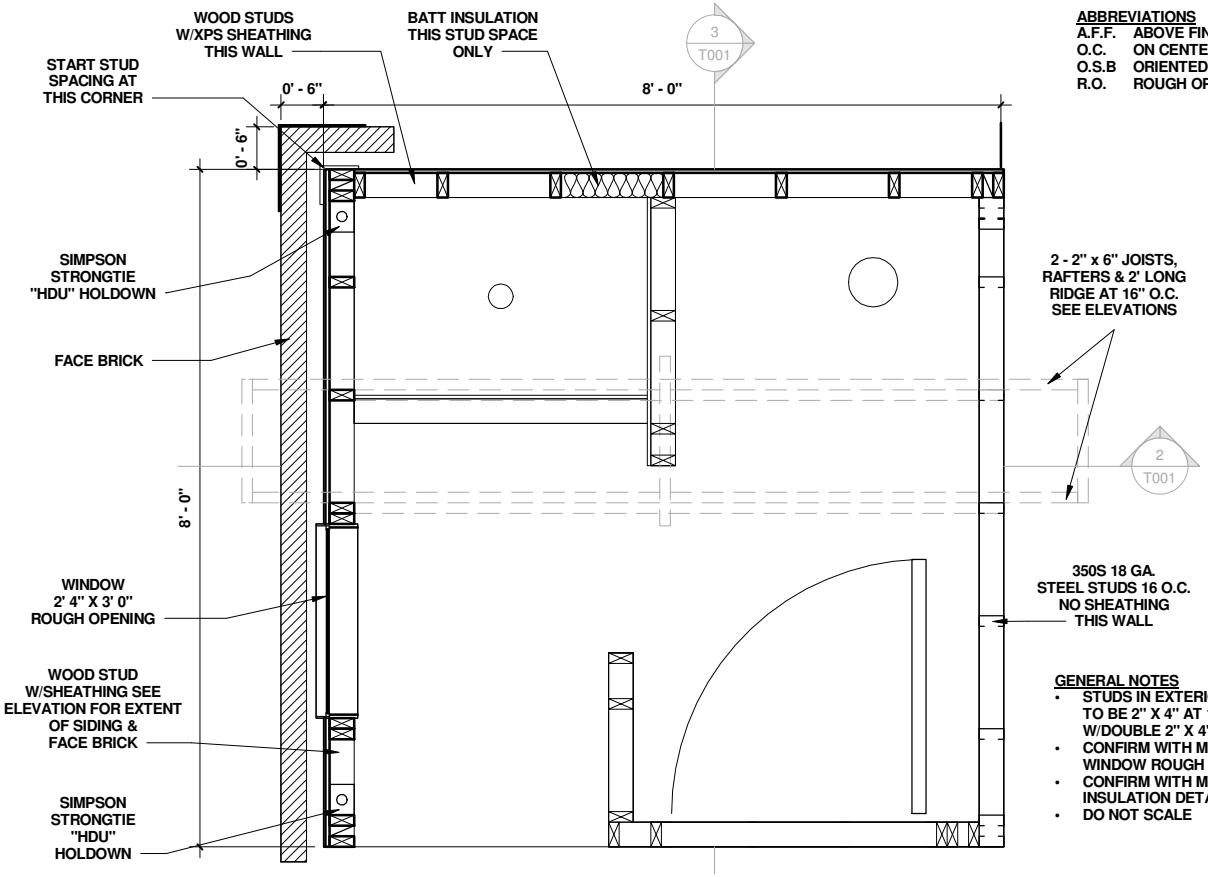

1 1 T001 - Floor Plan
3/4" = 1'-0"

ABBREVIATIONS

A.F.F.	ABOVE FINISHED FLOOR
O.C.	ON CENTER
O.S.B	ORIENTED STRAND BOARD
R.O.	ROUGH OPENING

GENERAL NOTES

- STUDS IN EXTERIOR BEARING WALLS TO BE 2" X 4" AT 16" O.C. W/DOUBLE 2" X 4" TOP PLATE
- CONFIRM WITH MANUFACTURER FOR WINDOW ROUGH OPENING
- CONFIRM WITH MANUFACTURER FOR INSULATION DETAIL
- DO NOT SCALE

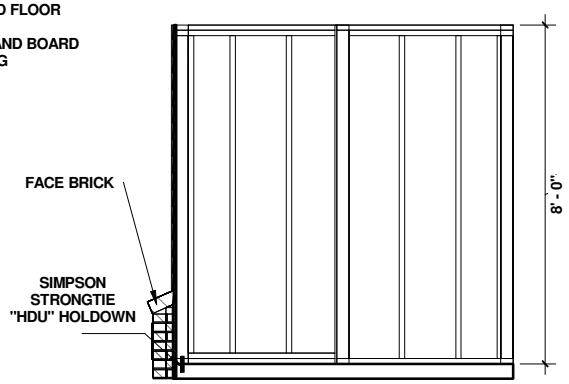

2 2 T001
3/8" = 1'-0"

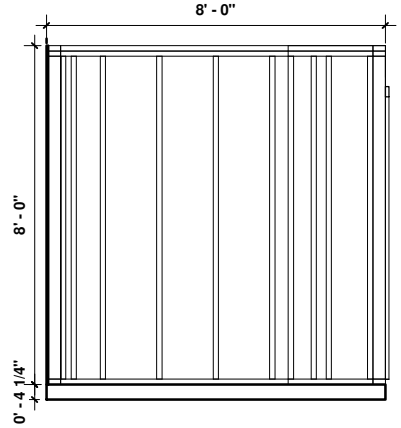

3 3 T001
3/8" = 1'-0"

2015 NATIONAL TEAMWORKS COMPETITION

http://www.skillsusaca.org/content/teamworks

Sheet 1/4		
Date	January 22, 2015	T001
Drawn by	Sophie C.H. Reich	

4/10/2015 7:30:14 PM

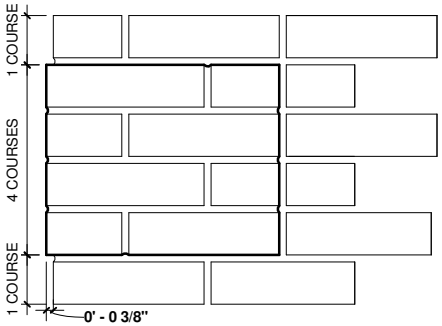

1 T002 - Brick Quoined Corner Detail
1" = 0'-7"

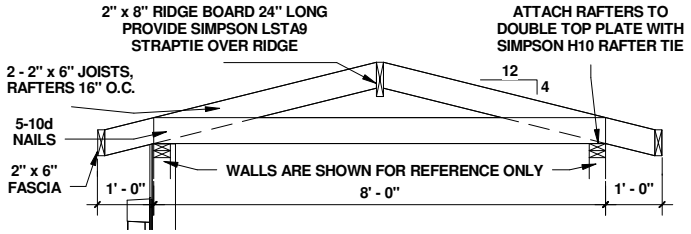

3 3 T002 - Rafter Detail
1/2" = 1'-0"

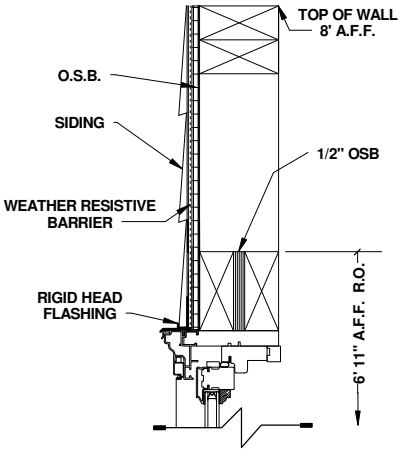

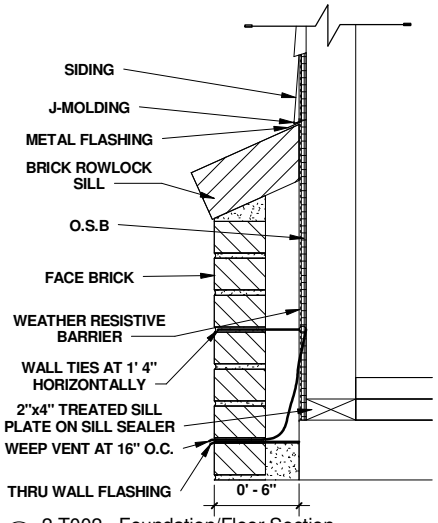

2 2 T002 - Foundation/Floor Section
1 1/2" = 1'-0"

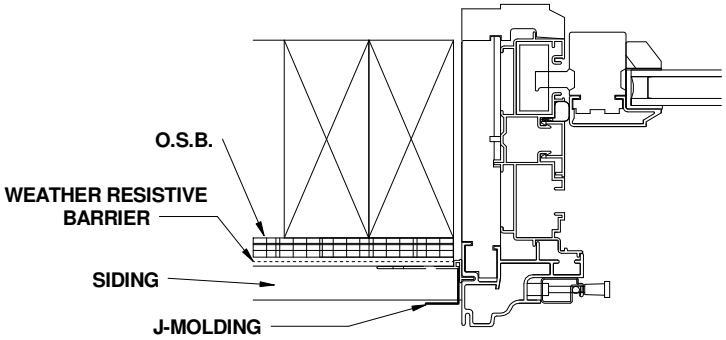

4 4 T002 Window Jamb
6" = 1'-0"

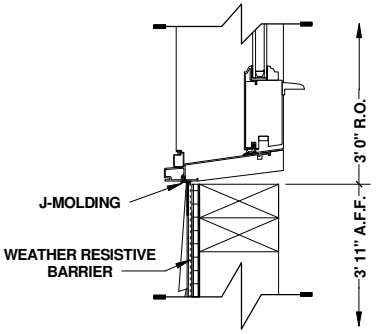

5 5 T002 - Window Sill & Head Details
1" = 0'-5"

2015 NATIONAL TEAMWORKS COMPETITION

http://www.skillsusaca.org/content/teamworks

Sheet 2/4		
Date	January 22, 2015	T002
Drawn by	Author	

4/10/2015 7:30:14 PM

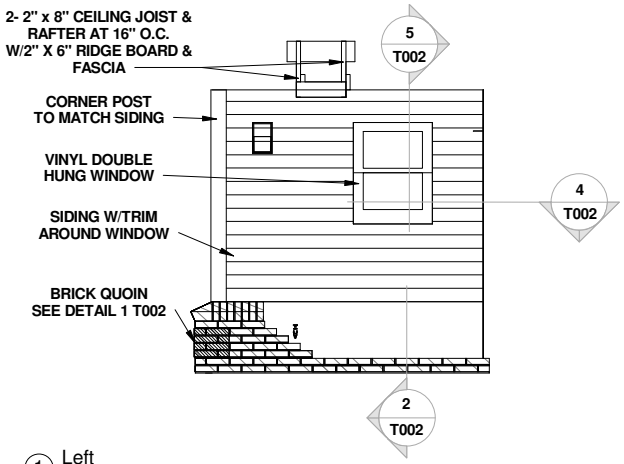

1 Left
1" = 3'-4"

GENERAL NOTES

- FASTEN XPS SHEATHING WITH BUTTONCAP FASTENERS AND TAPE ALL SEAMS

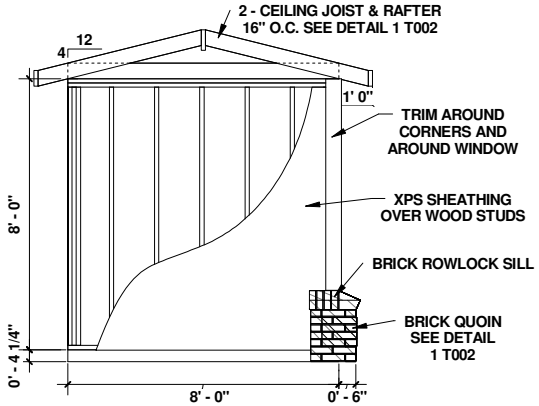

3 Back
1" = 2'-8"

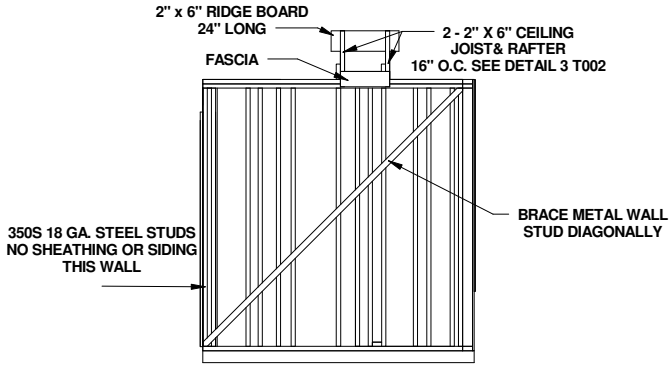

2 Right
1" = 3'-4"

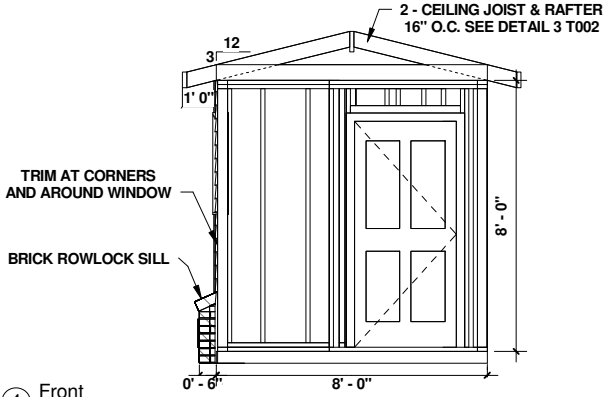

4 Front
1" = 3'-4"

2015 NATIONAL TEAMWORKS COMPETITION

http://www.skillsusaca.org/content/teamworks

Sheet 3/4

Date	January 22, 2015	T003
Drawn by	Author	

4/10/2015 7:30:16 PM

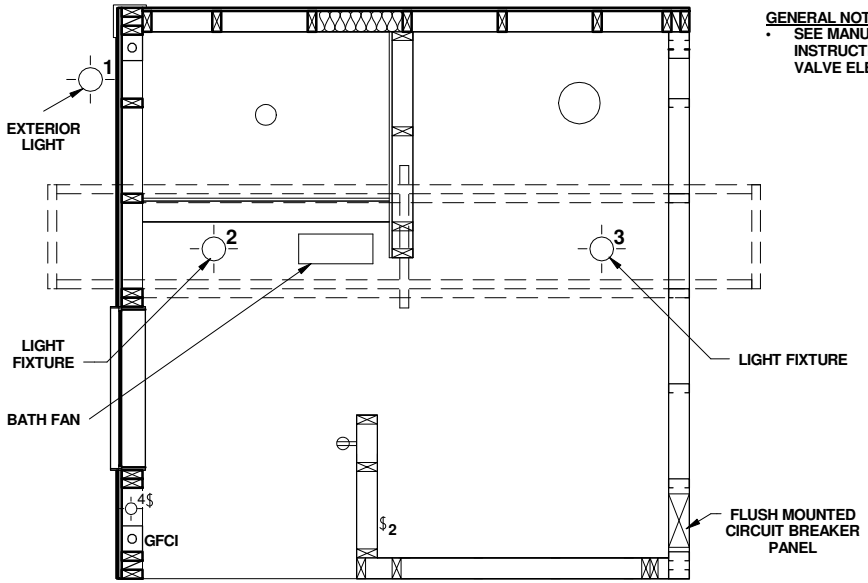

1 Power Floor Plan
1" = 1'-7"

GENERAL NOTES

- SEE MANUFACTURER'S INSTRUCTIONS FOR SHOWER VALVE ELEVATION

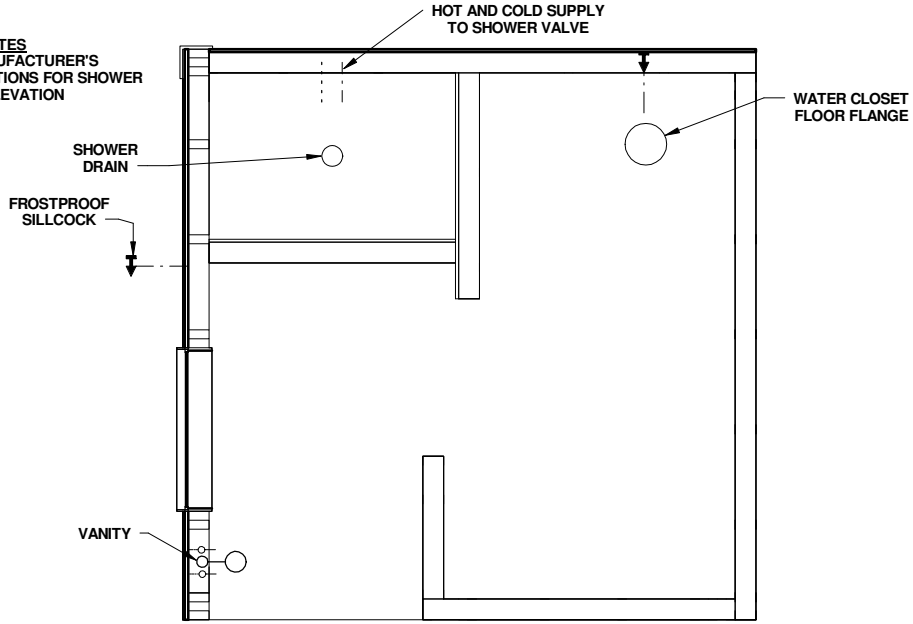

2 Plumbing Plan
1" = 1'-7"

ELECTRICAL LEGEND	
GFCI	GROUND FAULT CIRCUIT INTERUPTER
A.F.F.	ABOVE FINISHED FLOOR
	DUPLEX OUTLET & CIRCUIT NUMBER
$	SINGLE POLE SWITCH
$2	DOUBLE POLE SWITCH
	LIGHT FIXTURE & CIRCUIT NUMBER

	BREAKER PANEL		
OUTLETS	1	2	INTERIOR LIGHTS
FAN	3	4	EXTERIOR LIGHTS
	5	6	
	7	8	
	9	10	
	11	12	

PLUMBING LEGEND		
		STOP VALVE
	V	VENT
	W	WASTE
	CW	COLD WATER
	HW	HOT WATER
	WC	WATER CLOSET
	CO	CLEAN OUT

Notes:

1. All piping is to be extended from stub-up floor.
2. Provide traps for all plumbing fixtures.

2015 NATIONAL TEAMWORKS COMPETITION

http://www.skillsusaca.org/content/teamworks

Sheet 4/4

Date	January 22, 2015	T004
Drawn by	Sophie C.H. Reich	

4/10/2015 7:30:16 PM

TeamWorks Safety Manual

During the TeamWorks competition Safety is every one's responsibility. The judging staff and technical committee are committed to maintaining a safe environment for competitors, observes, and staff. If you are notified that you are in an unsafe situation or proceeding in an unsafe manner **Stop, Listen, and Correct.**

If you are injured during the completion let staff know and call for or proceed to the first aid center. Trained specialist will be available during the hours that the construction is taking place.

If you are found to be conducting you self in an unsafe manner points will be deducted from your overall score. While the first violation will result in only 1 point loss subsequent violations will result in 5 or 10 points lost. **Be Safe.**

Each team will have one member assign as the Jobsite Safety Coordinator. This person will have completed the OSHA 10 hour safety course and is responsible to insure that all activities on the jobsite are conducted in a safe manner. This person must be identified during your presentation and identified to judges that ask to confer with him or her.

It is every contestant duty to:

- Follow all safety rules
- Wear and take care of personal protective equipment
- Make sure all safety features for tools and equipment are functioning properly
- Don't let your work put another work in danger
- Replace damaged or dull hand tools immediately
- Avoid horseplay, practical jokes, or other activities that create a hazard
- Don't use drugs or alcohol on the job
- Report any unsafe work practice or any injury or accident to teamworks judges or technical committee members

Each contestant should have attended the OSHA 10 safety training prior to attending the national competition. Each jobsite safety coordinator will review and train his/her team on all safety standards that must be adhered to on the jobsite.

Personal Protective Equipment

Workers must use personal protective equipment, but it is not a substitute for taking safety measures. Workers still need to avoid hazards.

Head Protection

- Workers must wear hard hats whenever on the jobsite or walking to and from the jobsite except during breaks or lunch.
- Inspect hard hats routinely for dents, cracks or deformation.
- If a hard hat has taken a heavy blow or electrical shock you must replace it even when you detect no visible damage.

Eye and Face Protection

- Workers must wear safety glasses or face shields for welding, cutting, nailing, or when working with concrete and/or harmful chemicals.
- Eye and face protectors are designed for particular hazard so be sure to select the type to match the hazard.
- Replace poorly fitting or damaged safety glasses.

Foot Protection

- Contestants must wear shoes or boots with slip-resistant and puncture-resistant soles.
- Safety-toed shoes are required on the jobsite. Not open toed shoes or sandals are allowed.

Hand Protection

- High-quality gloves can prevent injury
- Gloves should fit snugly
- Glove must be worn when handling metal framing members.

Housekeeping and jobsite access

- Keep all walkways clear of trash/debris and other materials such as tools and supplies to prevent tripping
- Keep boxes, scrap lumber, and other materials picked up. Put them in a dumpster or trash/debris bins to prevent fire and tripping hazards

Ladders

- Keep all ladders in good and free of defects
- Inspect ladders before use for broken rungs or other defects so fall don't happen. Replace ladders if required.
- Do not set up a ladder near passageways or high traffic areas where it could be knock over
- Always face the ladder and maintain 3 points of contact when climbing a ladder.

Tools and Equipment

- Maintain all hand tools and equipment in a safe condition and check them regularly for defects. Remove broken or damaged tools and equipment from the jobsite.
- Follow manufacturer's requirements for safe use of all tools.
- Use double insulated tools or ensure that the tools are grounded
- Make sure guards are in place before using power saws. Don't use power saws with the guard tied or wedged open.
- Turn off saws before leaving then unattended.
- Raise or lower tools by their handles, not by their cords
- Keep wooden handles free of splinters or cracks and be sure the handles are stay tight in the tool.
- Require proper eye protection for workers.

Electrical

- Don't use frayed or worn electrical cords or cables.
- Maintain all electrical tools and equipment in a safe condition and check regularly for defects.
- Don't bypass any protective system or device designed to protect workers from contact with electrical current.

Fire Prevention

- Locate fire extinguisher near you jobsite

Conclusion

Safety is everyone business. If you see your team member doing something unsafe speak up and take corrective action.

Premium Building Products
That Protect

Dri-Shield™ HOUSEWRAP

Another energy saving product from Protecto Wrap®

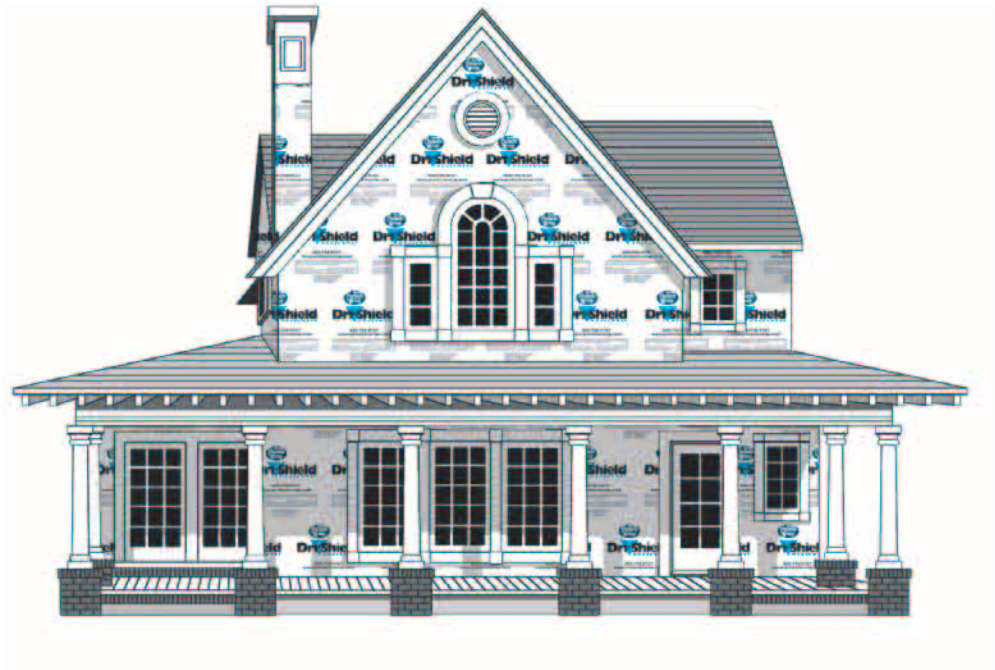

Dri-Shield™ Housewrap is a perforated polyolefin membrane that is installed beneath exterior siding to help reduce air and moisture infiltration. Dri-Shield™ Housewrap is not intended for use as a primary water barrier. Used in residential and commercial building, installing housewrap on an entire home or structure is generally the most common industry practice.

ADVANTAGES:

- Meets all building codes including SBCCI-ES 9737B, BOCAI-ES 21-56, and ICBO-ES ER-4449
- Dri-Shield™ Housewrap has achieved a permeance rating of 9 perms (average) and meets or exceeds all moisture/vapor transmission standards for building codes
- Helps stop mold and mildew by stopping moisture infiltration
- Perforated, high-quality, woven Polyolefin construction provides superior tear resistance
- Advanced perforated polyolefin membrane allows vapor to escape and prevent air infiltration and windblown rain from entering your home
- Protected with UV inhibitors and thermal degradation stabilizers to provide up to 365 day exposure
- Good contact clarity provides ease of stud recognition for precise fastener placement
- Works as a system application with all Protecto Wrap Products

PRODUCT WARRANTY:

Protecto Wrap Company warrants materials to be free of defects and will replace or, at our option, refund the purchase price of any materials proven to be defective. This limited warranty is in lieu of any other warranty or guarantee, expressed or implied, including warranties of merchantability or fitness for a particular purpose. In no event will Protecto Wrap Company be liable for incidental or consequential damages nor shall liability, if any, extend beyond the purchase price of the material. Protecto Wrap Company does not warrant the workmanship of the applicator.

Premium Building Products
That Protect

www.protectowrap.com

INSTALLATION INSTRUCTIONS:

- Dri-Shield™ Housewrap should be installed on the exterior side of the exterior wall with the printed side facing outward.
- Place the roll 2-3 feet from the corner and fasten to studs with staples or roofing nails.
- Unroll the sheet horizontally around the building and fasten to studs and plates.
- Space the fasteners every 12″-18″ along the vertical studs using large-headed or plastic cap nails or minimum 1″ crown staples.
- Lap the sheet a minimum of 12 inches and tape it in both the vertical and horizontal dimensions.
- Seal all edges with an approved pressure sensitive tape.

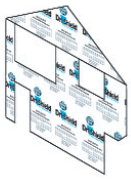

FOR FINNED WINDOWS AND DOORS:

Cut the Dri-Shield™ even with the rough opening at the sill and header, trim back one inch at side jambs. Make relief cuts at the corners, fold back to expose exterior sheathing at the sides and top of the rough opening. Install window in accordance with manufactures instructions, flash with Protecto Wrap's BT25XL window and door sealing tape or Protecto Flex flexible flashing tape. After window is installed fold the Dri-Shield to cover the flashing and tape all seams.

For superior air infiltration resistance:

- Sill plates should be covered and taped or caulked.
- The wrap-around is completed with a 6 inch (152 mm) or greater overlap.
- All horizontal joints created by multiple layers must be positioned with the upper layer overlapping the lower layer by at least 2 inches (51 mm).
- Seal all edges, overlaps and punctures with a 2 inch minimum strip of BT25XL Window Sealing Tape, Housewrap seaming tape or equivalent product. **BT25XL Flashing Tapes have proven superior sealing and longevity over standard housewrap tapes.**

Protecto Wrap Dri-Shield™ Housewrap must be covered by approved siding product following the siding manufacturer's installation instructions and prevailing building codes within 12 months of installation for maximum product performance and warranty. Protecto Wrap Dri-Shield™ Housewrap is not intended to perform the function of an exterior siding product.

DIMENSIONS:

Weight:	27 lbs/1,500 sq. ft.
Thickness:	5 mils
Roll Sizes/Widths Available:	9', 10'
Roll Sizes/Lengths Available:	150'

WARNING:

Protecto Wrap Dri-Shield™ Housewrap is slippery and should not be walked on. Dri-Shield™ Housewrap is not to be used directly with cedar siding. A cedar breather must be installed for correct air flow. Also, Protecto Wrap Company recommends code-approved kickbacks or scaffolds for exterior labor above the first floor.

PROTECTO WRAP COMPANY
1955 South Cherokee Denver, Colorado 80223 (303) 777-3001 Fax (303) 777-9273 (800) 759-9727
www.protectowrap.com

TOTALFLASH™

CAVITY-WALL DRAINAGE SYSTEM
by Mortar Net USA, Ltd.

Special Sizes for Restoration or Remediation Jobs, Too!

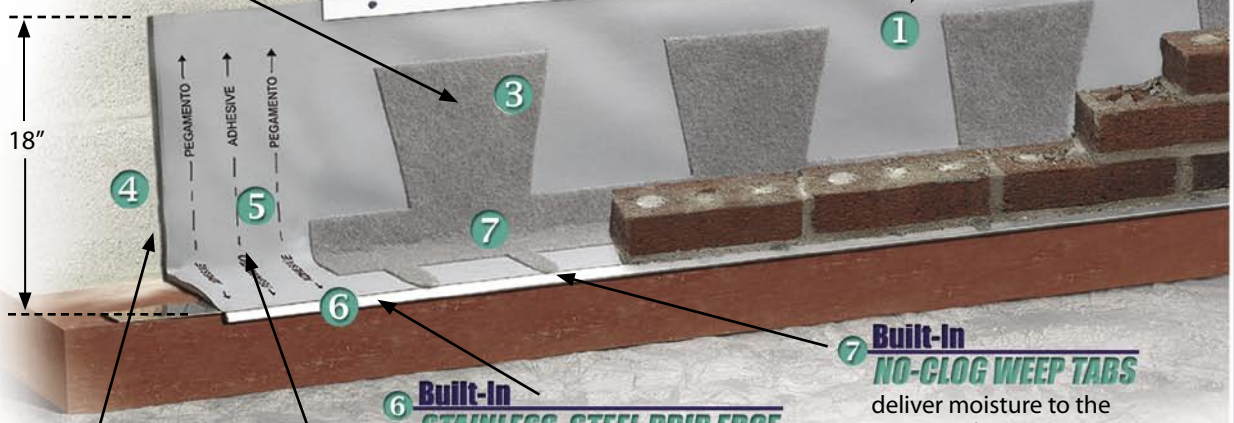

1 5-ft. Panels of PRE-CUT FLEXIBLE FLASHING*
All main components are factory-assembled onto easy-to-mount flashing panels.

2 Built-In TERMINATION BAR
with pre-drilled holes, allows quick, one-man installation.

3 Built-In NO-CLOG DRAINAGE MATTE
lets water pass, unobstructed, to Weep Tabs.

4 Built-In EDGE DAM
channels moisture down and out of building.

5 Clearly Specified LAP-JOINTS
enforce complete, secure coverage.

6 Built-In STAINLESS STEEL DRIP EDGE
releases moisture away from building.

7 Built-In NO-CLOG WEEP TABS
deliver moisture to the outside of the building.

Our Standard Flashing Membrane is an 18-inch, 40-mil polymeric, reinforced, UV stable membrane, incorporating DuPont's Elvaloy® KEE polymer.

Screws & Adhesives Included

in each package of TOTALFlash™ panels.

IT'S 100 YEARS OF MOISTURE-CONTROL TECHNOLOGY THAT YOU CAN HOLD WITH ONE HAND.

Wondering how anyone could give you twice your usual protection (or more), with half your usual time & labor (or less)? Just see what our masonry experts have managed to build into each handy, 5-foot panel of premium flashing.

With TOTALFlash™ - Everyone Wins!

Flashing alone isn't enough to meet today's rigorous moisture-control demands. But until now, higher protection meant higher expenses for time & labor.

TOTAL*Flash*™ changed all that, delivering higher protection with lower costs. But the benefits don't end there:

BUILDERS see quicker completion while lowering the risk of future wall-damage or mold-growth.

MASONS no longer have to order an array of components, then hope everything arrives on time.

- They no longer have to struggle with "field-cutting" awkward flashing-rolls.
- Our new Pre-Formed Corners get them off to a quicker start.
- **TOTAL*Flash*™** high-speed installation lets them start laying brick much sooner.

ARCHITECTS get the coverage they specified. (Our clearly marked Lap Joints make it foolproof!)

OWNERS enjoys greater peace-of-mind and a longer building-life.

TENANTS breathe easier, knowing there's far less chance of moisture-related illness.

What will Mortar Net® USA LTD. think of next?

www.MortarNet.com
800-664-6638

TOTALFLASH™

CAVITY-WALL DRAINAGE SYSTEM
by Mortar Net USA, Ltd.

NOTHING to Cut

The job starts with corners, but you don't have to make them by hand any more. Our flawless, factory-built Corner Boots save you time & trouble.

And of course our new **TOTAL***Flash*™ means masons can quit being roofers, because each panel comes pre-cut to a handy, 5-foot length. (See inside.)

NOTHING Faster

TOTAL*Flash*™ can be installed by one worker, at speeds twice as fast as anything else they've used. Half the labor, half the time--it adds up to nice savings all around.

NOTHING Protects Better

For example, even when mortar or grout droppings pile up to the top of the flashing-panel, water will still escape through **TOTAL***Flash*™ layer of no-clog polyester mesh.

The Beauty of Green

Ideally, masonry buildings should last for centuries. Such longevity isn't just a benefit to the building's owner, it's a plus for our whole environment. Demolition wastes the resources that went into the old building, then spends new resources to build its replacement.

TOTAL*Flash*™ guards against the damage trapped moisture can cause to a building's exterior masonry walls, thus helping to prevent costly waste. It also works to suppress the air-quality hazards that can arise in damp wall cavities.

SECOND Chances

It happens that **TOTAL***Flash*™ was invented by Tom Sourlis, who restored the masonry of Chicago's famed Water Tower and many other historic landmarks.

Tom made sure to create **TOTAL***Flash*™ in sizes that could be easily installed in existing structures, without removing any additional courses of brick.

It can give older buildings a new lease on life, while helping to sustain our nation's resources.

*The use of **TOTAL***Flash*™ may help your project to qualify for LEED credits.*

Sustainable Buildings Industry Council

ARCAT

NEW TOTALFLASH™

CAVITY-WALL DRAINAGE SYSTEM
by Mortar Net USA, Ltd.

THE FIRST MASONRY FLASHING SYSTEM...

That Has It All!

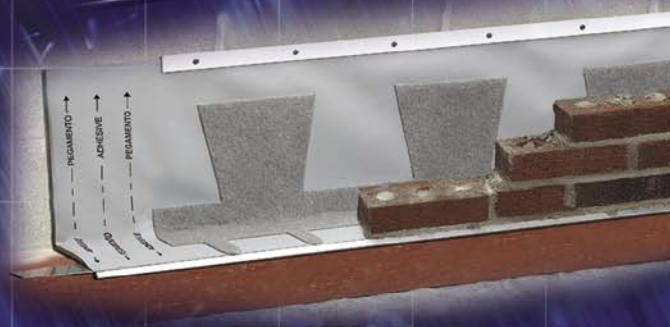

Super Protection.
Super-Quick Installation.
Super Savings.

Mortar Net® USA LTD.

541 South Lake Street, Gary, IN 46403
800-664-6638
www.MortarNet.com

TOTAL Protection That Installs In A *FLASH*

What will Mortar Net® think of next?

TOTALFLASH
CAVITY-WALL DRAINAGE SYSTEM
by MortarNet USA, Ltd.

(800) 664-6638

INSTALLATION GUIDE- Option A

1 STEP ONE

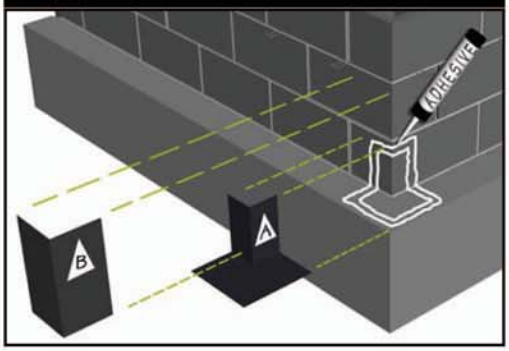

INSTALL PREFORMED CORNER A USING 2 BEADS OF ADHESIVE. APPLY PEEL & STICK LEGGING B OVER PRE FORMED CORNER BOOT.

2 STEP TWO

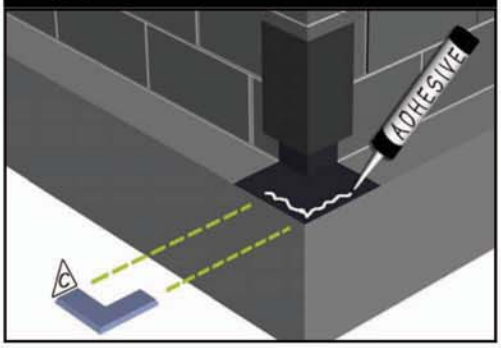

APPLY SEALANT / ADHESIVE TO PREFABRICATED STAINLESS STEEL CORNER C AND INSTALL OVER BOOT.

3 STEP THREE

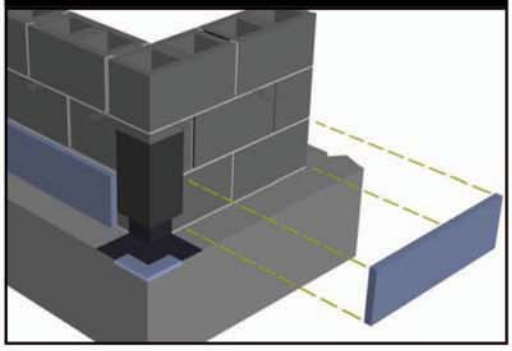

INSTALL 8" HIGH SECTIONS OF RIGID INSULATION BOARD AGAINST BACKUP WALL. HOLD INSULATION 6" FROM EACH CORNER.

4 STEP FOUR

TRIM 6" LAP SECTION FROM RIGHT SIDE OF FIRST SECTION OF TOTALFLASH.

INSTALL TOTALFLASH D ADJACENT TO CORNER DRIP USING ADHESIVE.

INSTALL THE FIRST SECTION AT THE RIGHTMOST CORNER AND LAP SUBSEQUENT SECTIONS FROM RIGHT TO LEFT.

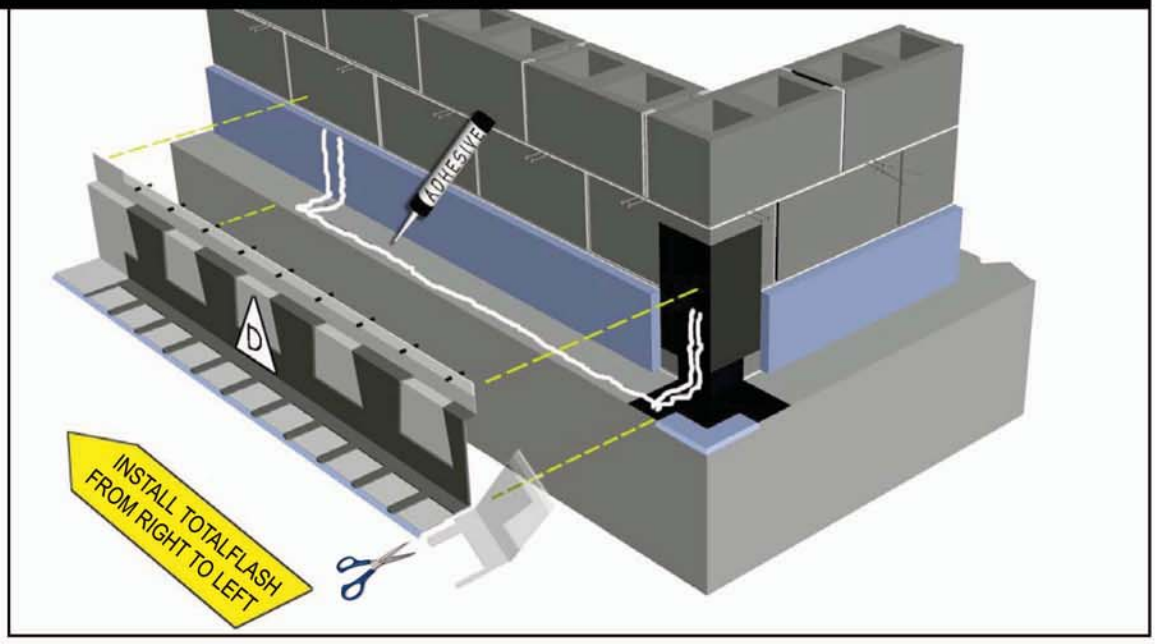

5 STEP FIVE

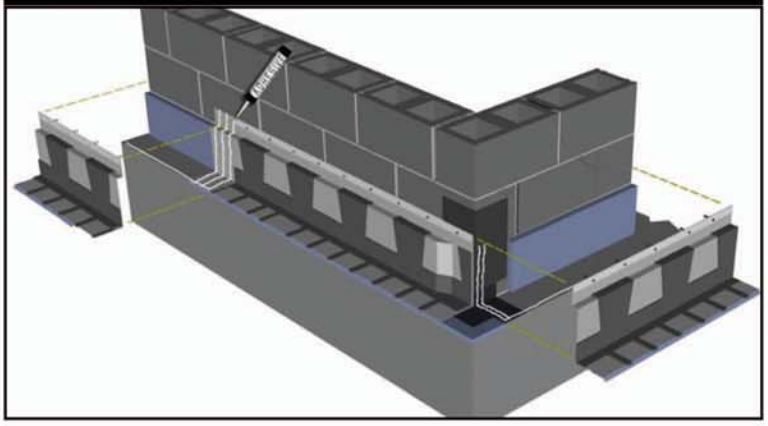

INSTALL REMAINING SECTIONS USING THE INTEGRATED LAP SYSTEM AND SEALANT, TRIM END SECTION FLUSH WITH CORNER DRIP. CAULK TOP OF TERMINATION BAR.

6 STEP SIX

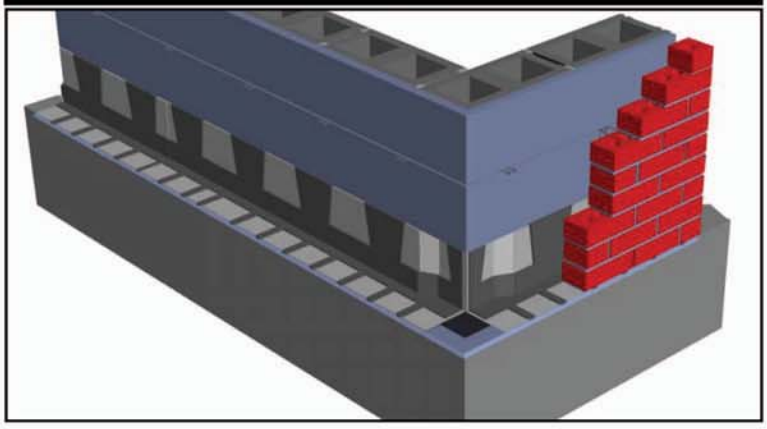

INSTALL REMAINING RIGID BOARD INSULATION ABOVE TOTALFLASH.

R2-12-14-07

TOTALFLASH
CAVITY-WALL DRAINAGE SYSTEM
by MortarNet USA, Ltd.

(800) 664-6638

INSTALLATION GUIDE- Option B

1 STEP ONE

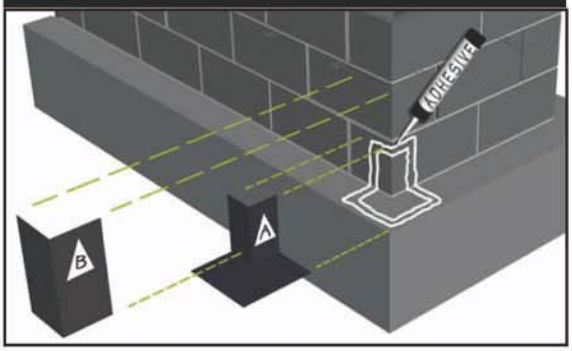

INSTALL PREFORMED CORNER A USING 2 BEADS OF ADHESIVE. APPLY PEEL & STICK LEGGING B OVER PRE FORMED CORNER BOOT.

2 STEP TWO

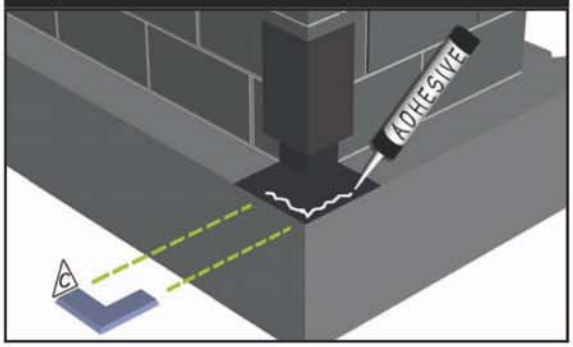

APPLY SEALANT / ADHESIVE TO PREFABRICATED STAINLESS STEEL CORNER C AND INSTALL OVER BOOT.

3 STEP THREE

TRIM 6" LAP SECTION FROM RIGHT SIDE OF FIRST SECTION OF TOTALFLASH.

INSTALL TOTALFLASH D ADJACENT TO CORNER DRIP USING ADHESIVE.

INSTALL THE FIRST SECTION AT THE RIGHTMOST CORNER AND LAP SUBSEQUENT SECTIONS FROM RIGHT TO LEFT.

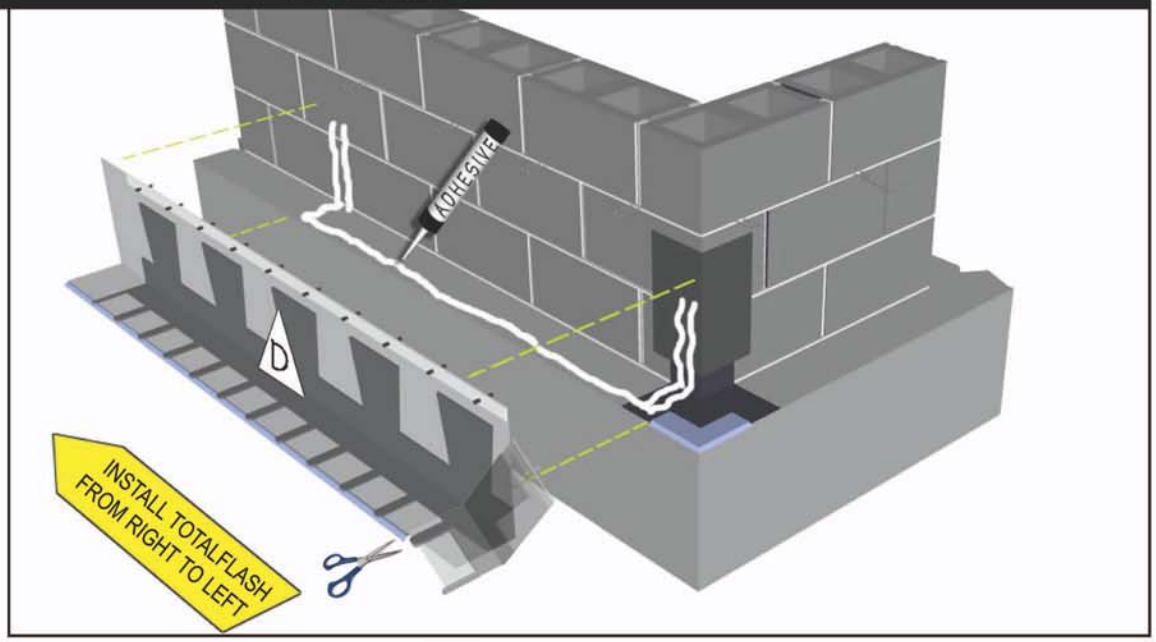

4 STEP FOUR

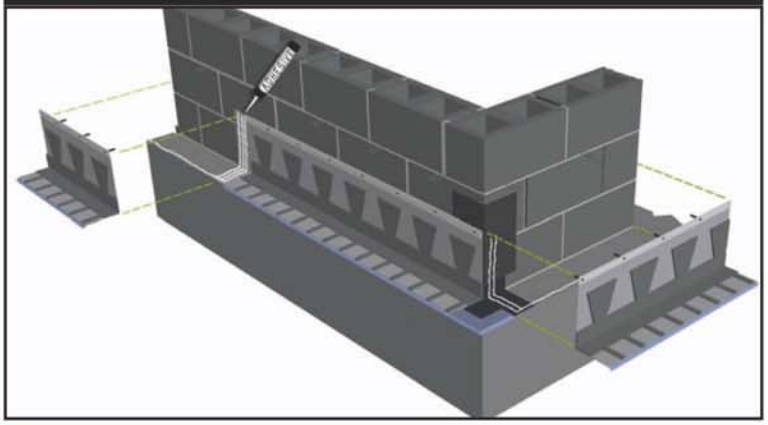

INSTALL REMAINING SECTIONS USING THE INTEGRATED LAP SYSTEM AND SEALANT, TRIM END SECTION FLUSH WITH CORNER DRIP. CAULK TOP OF TERMINATION BAR.

5 STEP FIVE

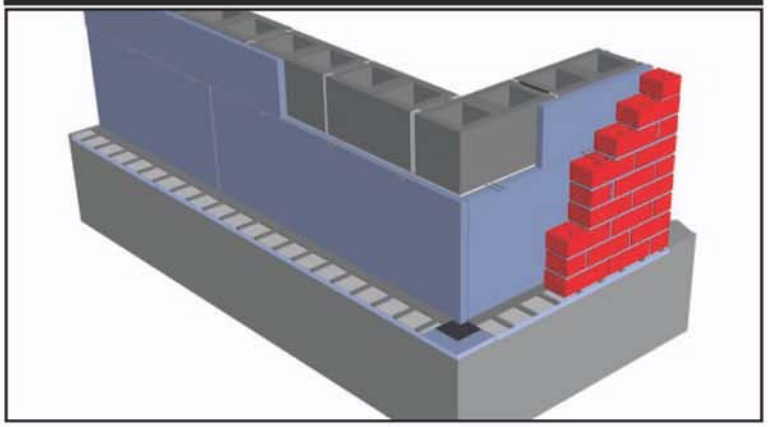

INSTALL RIGID BOARD INSULATION ABOVE TOTALFLASH.

R2-12-14-07

TOTALFLASH
CAVITY-WALL DRAINAGE SYSTEM
by MortarNet USA, Ltd.

(800) 664-6638

INSTALLATION GUIDE

WINDOW HEAD FLASHING

1 STEP ONE

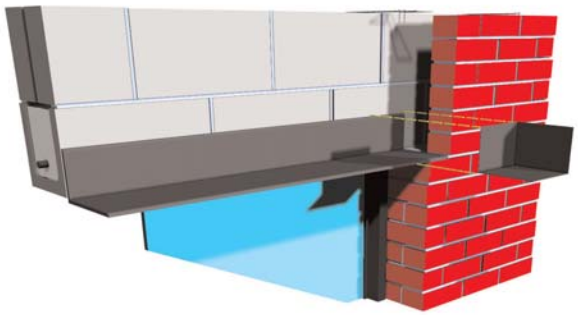

INSTALL SELF ADHERED PREFORMED END DAM ON BOTH ENDS OF OPENING, TRIM TO FIT.

2 STEP TWO

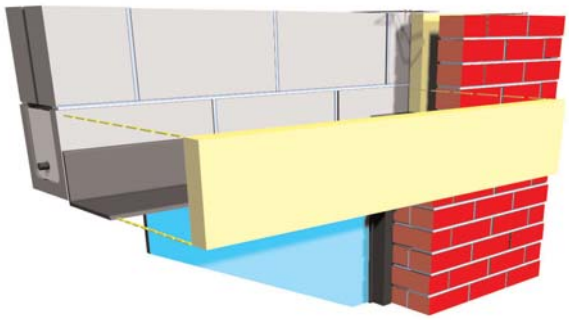

INSTALL 8 " HIGH SECTION OF RIGID INSULATION BOARD AGAINST THE BACKUP WALL AT LINTEL.

3 STEP THREE

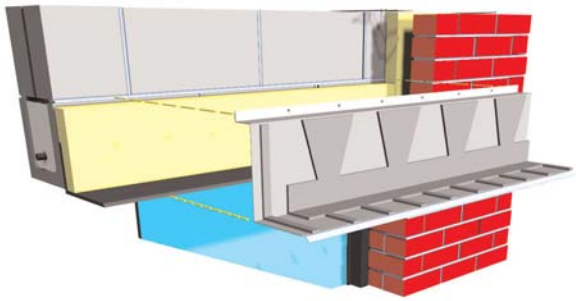

INSTALL FIRST SECTION OF TOTALFLASH ADJACENT TO END DAM USING ADHESIVE AND PRESSURE BAR SCREWS.

4 STEP FOUR

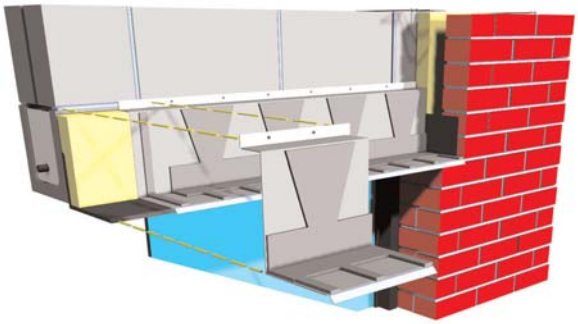

INSTALL REMAINING SECTIONS OF TOTALFLASH AS NEEDED USING THE INTEGRATED LAP SYSTEM, SEALANT AND SCREWS. CAULK TOP OF TERMINATION BAR.

5 STEP FIVE

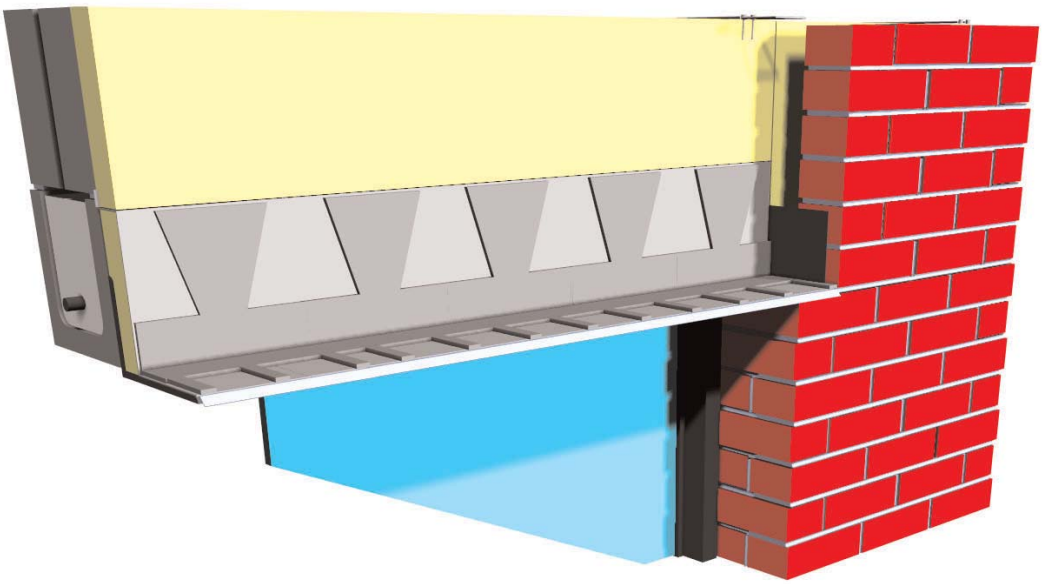

INSTALL REMAINING RIGID BOARD INSULATION ABOVE TOTALFLASH.

TOTALFLASH
CAVITY-WALL DRAINAGE SYSTEM
by MortarNet USA, Ltd.

(800) 664-6638

INSTALLATION GUIDE

INSIDE CORNER

1 STEP ONE

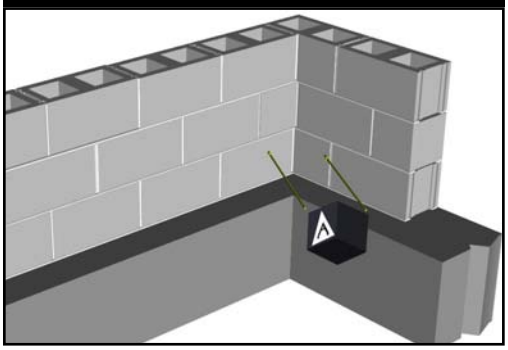

INSTALL PREFORMED CORNER A USING 2BEADS OF ADHESIVE.

2 STEP TWO

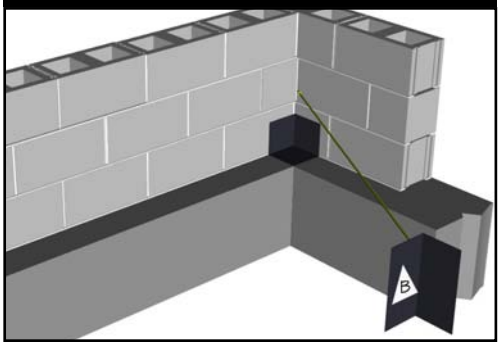

APPLY PEEL & STICK LEGGING B OVER PRE FORMED CORNER BOOT.

3 STEP THREE

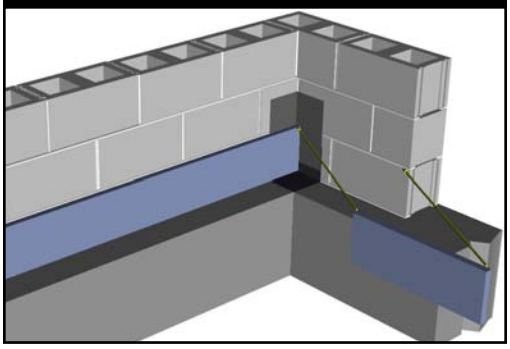

INSTALL 8" HIGH SECTIONS OF RIGID INSULATION BOARD AGAINST BACKUP WALL..

4 STEP FOUR

TRIM 6" LAP SECTION FROM RIGHT SIDE OF FIRST SECTION OF TOTAL FLASH AT A 45 DEGREE ANGLE.

INSTALL TOTALFLASH C ADJACENT TO INSIDE CORNER USING ADHESIVE AND TERMINATION BAR SCREWS.

INSTALL THE FIRST SECTION AT THE RIGHTMOST CORNER AND LAP SUBSEQUENT SECTIONS FROM RIGHT TO LEFT.

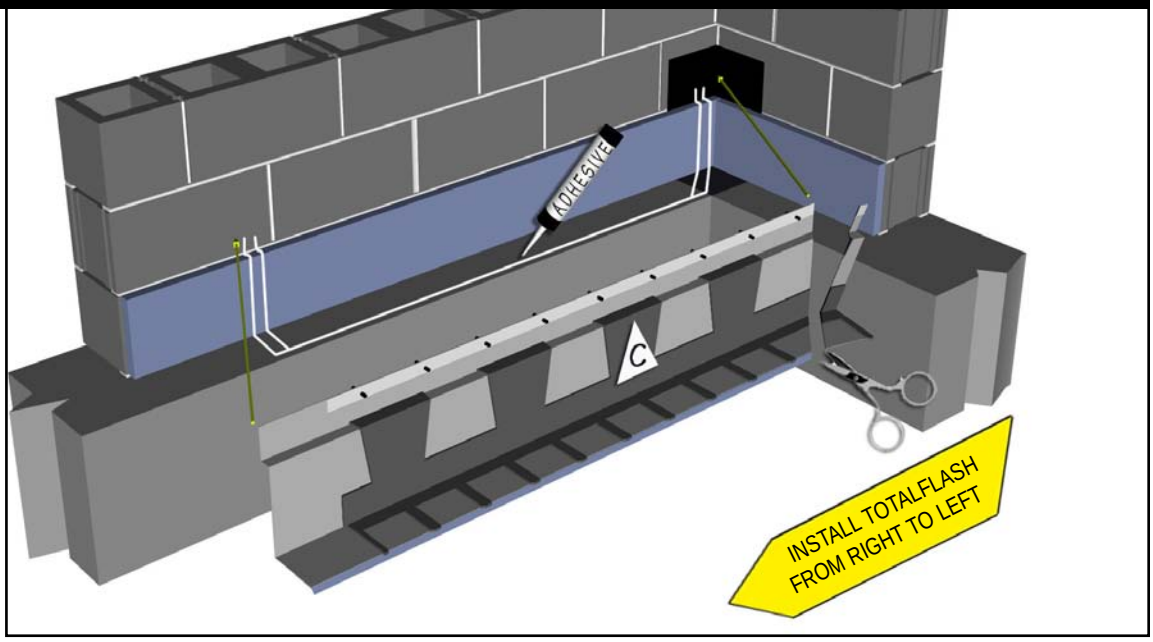

5 STEP FIVE

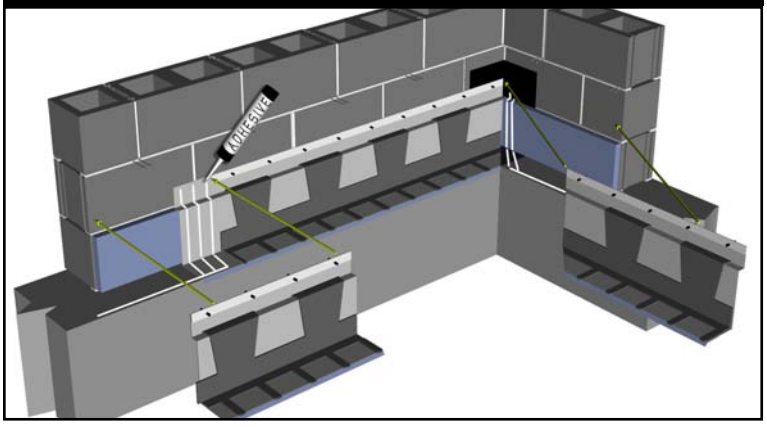

INSTALL REMAINING SECTIONS USING THE INTEGRATED LAP SYSTEM AND SEALANT, MITER END SECTION FLUSH WITH INSIDE CORNER. CAULK TOP OF TERMINATION BAR

6 STEP SIX

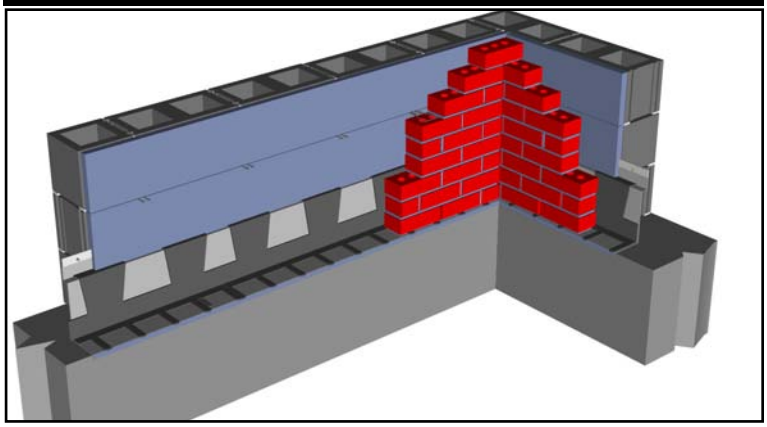

INSTALL REMAINING RIGID BOARD INSULATION ABOVE TOTALFLASH

rev. 4-7-2008

Mortar Net®
The Difference Is In *The Cut.*

541 South Lake Street • Gary, IN 46403
Tel: 800.664.6638 • Fax: 219.939-3877

RESIDENTIAL HOUSENET™ CAVITY WALL SPECIFICATIONS

MASONRY ACCESSORIES 04090

This MANU-SPEC utilizes the Construction Specifications Institute (CSI) *Manual of Practice*, including *MasterFormat, SectionFormat, and PageFormat*. A MANU-SPEC is a manufacturer specific proprietary product specification using the proprietary method of specifying applicable to project specifications and master guide specifications. Optional text is indicated by brackets (); delete optional text in final copy of specification. Specifier Notes typically precede specification text; delete notes in final copy of specification. Trade/brand names with appropriate symbols typically are used in Specifier Notes; symbols are not used in specification text. Metric conversion, where used, is soft metric conversion.

This MANU-SPEC specifies a fabricated open mesh intended to catch and permanently suspend mortar droppings above weep holes, marketed under the Residential HouseNet™ brand name, as manufactured by Mortar Net USA, Ltd. (Patent Reissue #36676) When placed in the collar joint or cavity on top of the flashing at the base of a wall, the Mortar Net catches and permanently suspends mortar droppings in an irregular pattern above the weep hole vents. Due to its unique trapezoidal shape and strong plastic construction, mortar droppings cannot fall to the base of the flashing, so weep hole vents stay open. Because it prevents mortar droppings from forming a continuous dam, and due to its 90% open weave, moisture can pass quickly and easily to the weeps and air pressure differentials between the cavity and the exterior can equalize through the open weeps and Mortar Net itself. Revise MANU-SPEC section number and title below to suit project requirements, specification practices and section content. Refer to CSI MasterFormat for other section numbers and titles. Including 04050 Basic Masonry Materials & Methods; 04090 Masonry Accessories; 04200 Masonry Units; and 04800 Masonry Assemblies.

SECTION 04090
MASONRY ACCESSORIES
(MASONRY ASSEMBLIES)

PART 1 GENERAL

1.01 SUMMARY

A. Section Includes: Mortar dropping collection device for masonry veneer walls.

Specifier Note: Revise paragraph below to suit project requirements. Add section numbers and title per CSI MasterFormat and specifier's practice.

B. Related Sections: Section(s) related to this section include:
   1. Unit Masonry: Division 4 Unit Masonry Assembly Section.
   2. Wall Flashing: Division 7 Flashing Section.
   3. Brick and Block Vents: Division 10 Vents Section.

Specifier Note: Retain paragraph below to suit project requirements. Coordinate with Part 2 Products herein and other Contract Documents.

C. Unit Prices: Products and Installation included in this section are specified by unit prices. Refer to Division 1 Unit Prices Section for unit prices amounts and requirements.
   1. Unit Price: Unit price is per lineal foot (304.8 mm).

541 South Lake Street • Gary, IN 46403
Tel: 800.664.6638 • Fax: 219.939-3877

1.02 SYSTEM DESCRIPTION

A. System Description: Use Residential HouseNet™ as part of standard masonry veneer wall flashing/weep hole wall drainage systems. The Residential HouseNet™ keeps weep hole vents open and flashing free of mortar droppings and debris by catching and permanently suspending droppings above the level of the top of the weep hole vents, by preventing mortar from forming a continuous barrier against proper water flow to the weeps and by providing routes through the body of the product itself for water to flow to the flashing and weeps.

B. Performance Requirements: Provide (Section/Product Title) which has been manufactured, fabricated and installed to withstand loads from (specify code/standard reference,) and to maintain (specify performance criteria,) performance criteria stated (certified) by manufacturer without defects, damage or failure.

Specifier Note: Article below includes submittal of relevant data to be furnished by Contractor before, during or after construction. Coordinate this article with Architect's and Contractor's duties and responsibilities in Conditions of the Contract and Division 1 Submittal Procedures Section.

1.03 SUBMITTALS

A. General: Submit listed submittals in accordance with Conditions of the Contract and Division 1 Submittal Procedures Section.

B. Product Data: Submit product data, including manufacturer's SPEC-DATA product sheet, for specified products.

C. Samples: Submit selection and verification samples.

D. Quality Assurance Submittals: Submit the following:
   1. Certificates: Product certificates signed by manufacturer certifying materials comply with specified performance characteristics and criteria.
   2. Manufacturer's Instructions: Manufacturer's Installation Instructions.

E. Closeout Submittals: Submit the following:
   1. Warranty: Warranty documents specified herein.

Specifier Note: Article below should include prerequisites, standards, limitations and criteria which establish an overall level of quality for products and workmanship for this section. Coordinate below article with Division 1 Quality Assurance Section.

1.04 QUALITY ASSURANCE

A. Installer Qualifications: Installer experienced in performing work of this section who has specialized in installation of work similar to that required for this project.

Specifier Note: Paragraph below should list obligations for compliance with specific code requirements particular to this section. General statements to comply with a particular code are typically addressed in Conditions of the Contract and Division 1 Regulatory Requirements Section. Repetitive statements should be avoided.

B. Regulatory Requirements: (Specify applicable requirements of regulatory agencies.)

Specifier Note: Coordinate paragraph below with Division 1 Project Management and Coordination (Project Meetings) Section.

541 South Lake Street • Gary, IN 46403
Tel: 800.664.6638 • Fax: 219.939-3877

1.04 QUALITY ASSURANCE (cont.)

C. Pre-installation Meeting: Conduct pre-installation meeting to verify project requirements, substrate conditions, manufacturer's installation instructions and manufacturer's warranty requirements. Comply with Division 1 Project Management and Coordination (Project Meetings) Section.

Specifier Note: Article below should include special and unique requirements. Coordinate article below with Division 1 Product Requirements Section.

1.05 DELIVERY, STORAGE AND HANDLING

A. General: Comply with Division 1 Product Requirements Sections.

B. Ordering: Comply with manufacturer's ordering instructions and lead time requirements to avoid construction delays.

C. Packing, Shipping, Handling and Unloading: (Specify applicable requirements.)

Specifier Note: Products of 1", 2", and .4" thick material are shipped 80 lineal feet (24,384 mm) per cardboard box, with sixteen 5' (1524 mm) sections per box. Product requires no special handling, is very lightweight, and boxes and loose materials are easily handled by 1 person. Secure loose and boxed material during strong winds.

D. Delivery: Deliver materials in manufacturer's original, unopened, undamaged containers with identification labels intact.

E. Storage and Protection: Store materials protected from exposure to harmful weather conditions and at temperature conditions recommended by manufacturer.
   1. Do not expose material to direct sunlight for more than 2 weeks. If material is protected from exposure to direct sunlight it may be stored indefinitely.

1.06 SEQUENCING

A. General: Install the Residendtial HouseNet™ product after flashing has been installed, the first 1 or 2 courses of brick have been laid, and weep holes have been created. Install product before third or higher courses of brick have been laid.

Specifier Note: Coordinate article below with Conditions of the Contract and with Division 1 Closeout Submittals (Warranty) Section.

1.07 WARRANTY

A. Project Warranty: Refer to Conditions of the Contract for project warranty provisions.

B. Manufacturer's Warranty: Submit, for Owner's acceptance, manufacturer's standard warranty document executed by authorized company official. Manufacturer's warranty is in addition to, and not a limitation of, other rights Owner may have under Contract Documents.

541 South Lake Street • Gary, IN 46403
Tel: 800.664.6638 • Fax: 219.939-3877

1.07 WARRANTY (cont.)

Specifier Note: Coordinate paragraph below with manufacturer's warranty requirements. Mortar Net USA, Ltd. warrants its products to be of the quality and composition stated and free of manufacturer's defects. It will replace or refund the purchase price of any product proved defective. This limited warranty is the only warranty extended by Mortar Net USA, Ltd. In regard to its product, Mortar Net USA, Ltd.'s liability shall not exceed the purchase price of the material in question. Every construction project is unique; therefore, every use of Residential HouseNet™ *and Mortar Net Weep Vents must be evaluated and approved by a qualified professional such as an architect or engineer familiar with the project.*

1. Warranty Period: (Specify term,) years commencing on Date of Substantial Completion.

PART 2 PRODUCTS

Specifier Note: Retain article below for proprietary method specification. Add product attributes, performance characteristics, material standards and descriptions as applicable. Use of such phrases as "or equal" or "or approved equal" or similar phrases may cause ambiguity in specifications. Such phrases require verification (procedural, legal and regulatory) and assignment of responsibility for determining "or equal" products.

2.01 MASONRY VENEER WALL DRAINAGE SYSTEM

A. Manufacturer: Mortar Net USA, Ltd.

Specifier Note: Paragraph below is an addition to CSI SectionFormat and a supplement to MANU-SPEC. Retain or delete paragraph below per project requirements and specifier's practice.

1. Contact: 541 South Lake Street, Gary, IN 46403; Telephone: (800) 664-6638, (219) 939-3870; Fax: (219) 939-3877, E-mail: webmaster@mortarnet.com Website: www.mortarnet.com

Specifier Note: The Mortar Net is manufactured of nylon, high density polyethylene (HDPE) or polyester, fabricated in a 90% open mesh, 2", 1" or 0.4" (51, 25.4, 10.2 mm) thick. It has no negative reaction to PVC, polyethylene, polystyrenes, copper, lead, rubberized asphalt, or stainless steel and will not degrade or decompose over the life of the building. It will not absorb or trap moisture and water, and it will not support mold or fungus. The Mortar Net is patented, U.S. Patent Reissue #36676.

B. Proprietary Product(s)/System(s): The Residential HouseNet™ accessory.

1. Mortar Net MN 10-1: 7¾" (196.9 mm) high x 1" (25.4 mm) thick material.
2. Mortar Net MN 10-4: 7¾" (196.9 mm) high x 0.4" (10.2 mm) thick material.
3. Mortar Net MN 10-2: 7¾" (196.9 mm) high x 2" (51 mm) thick material.

Specifier Note: Edit article below to suit project requirements. If substitutions are permitted, edit text below. Add text to refer to Division 1 Project Requirements (Product Substitutions Procedures) Section.

2.02 SUBSTITUTIONS

A. Product Substitutions: No substitutions permitted.

541 South Lake Street • Gary, IN 46403
Tel: 800.664.6638 • Fax: 219.939-3877

2.03 MATERIALS

Specifier Note: 1" (25.4 mm) material is high density polyethylene (HDPE), 0.4" (10.2 mm) thick material is nylon, and 2" (51 mm) thick material is recycled polyester. None of these materials will oxidize, rot, support mold or fungus, or react with common building materials, including mortar, cement asphalt, modified bitumen, PVC, copper, steel, or galvanized metal, and they are not edible by insects. The material retains its slope anti-rigidity and is undamaged by extended exposure to norml field temperatures, and is highly resistant to UV degradation.

A. Materials: Manufacturer's standard Residential HouseNet™ material for specified product.

1. All dimensions are nominal. Measurements are inclusive of the continuous bottom strip and the dovetail shape.
2. Four available sizes: 1" (25.4 mm) and 0.4" (10.2 mm) thicknesses by 10" (254 mm) height by 5' (1524 mm) long. 2" (51 mm) thick by 10" (254 mm) x 5' (1524 mm) long.
3. Continuous bottom strip on all sizes of material is 3" (76.2 mm) high, regardless of material thickness or overall material height.
4. 1" (25.4 mm) thick product is high density polyethylene (HDPE), 0.4" (6.4 mm) thick product is nylon, and 2" (51 mm) thick material is recycled polyester. Product is a 90% open weave mesh in a dovetail configuration connected by a continuous bottom strip.

2.04 SOURCE QUALITY

A. Source Quality: Obtain the Mortar Net materials from a single manufacturer.

PART 3 EXECUTION

Specifier Note: Article below is an addition to the CSI SectionFormat and a supplement to MANU-SPEC. Revise article below to suit project requirements and specifier's practice.

3.01 MANUFACTURER'S INSTRUCTIONS

A. Compliance: Comply with manufacturer's product data, including product technical bulletins, product catalog installation instructions and product carton instructions for installation.

3.02 EXAMINATION

A. Site Verification of Conditions: Verify substrate conditions, which have been previously installed under other sections are acceptable for product installation in accordance with manufacturer's instructions.
   1. Match product size to cavity size. Cavity should be no more than 1/4" (6.4 mm) wider than 1" (25.4 mm) thick material and 2" (51 mm) thick material, and 0.4" (10.2 mm) thick material should touch both the outer wythe and the inner wall. For cavities larger than 2" (51 mm), place rigid insulation of sufficient height to extend at least 6" (152 mm) above the top of the Residential HouseNet™ against the outside of the inner wythe and of appropriate thickness to reduce the cavity to the appropriate size.
   2. Inspect for and repair holes in flashing immediately prior to installing Residential HouseNet™.

541 South Lake Street • Gary, IN 46403
Tel: 800.664.6638 • Fax: 219.939-3877

3.03 PREPARATION

A. Preparation: Clean flashing and weep holes so they are free of mortar droppings and debris immediately prior to installing Mortar Net. If wicks are used (not recommended), prevent mortar from coating or covering wicks inside the cavity. Washing flashing with water or chemicals prior to installation is not necessary.

Specifier Note: Coordinate article below with manufacturer's recommended installation details and requirements.

Specifier Note: Manufacturer recommends placing 1 continuous row of Residential HouseNet™ in the collar joint or cavity on the flashing at the base of the wall, at each flashing level and over lintels. Position with the zigzag side up (see manufacturer's CAD details). The Mortar Net should fit snugly in cavity, so if cavity is greater than 2" (51 mm) wide, either use several thicknesses of The Mortar Net or use appropriately sized styrofoam board (or equivalent) not less than 16" (406 mm) high as a spacer to fill excess space. Place spacer against the outside of the interior wall so The Mortar Net is against the inside of the exterior wythe. If no spacer is used, flashing should extend not less than 6" (152 mm) above the top of The Mortar Net to avoid the possibility of mortar bridging between the exterior wythe and interior wall. Adhesives, fasteners, specials skills or tools are not required.

3.04 INSTALLATION

A. Mortar Net Installation:

1. For most walls, install 1 continuous row of The Mortar Net at base of wall and over all wall openings directly on flashing.
2. To prevent mortar bridging between the outer wythe and inner wall, install flashing extending from the bottom of The Mortar Net to at least 6" (152 mm) above the top of The Mortar Net.
3. Multiple thicknesses of Residential HouseNet™ may be installed to match cavity widths and if excessive droppings are expected. Inspection, preparation and installation procedure for multiple thicknesses is the same as for single thickness. When installing multiple thicknesses, align the dovetail sections with each other.
4. To match cavity width to product thickness without using multiple thicknesses of Residential HouseNet™, place rigid insulation of appropriate thickness against outside face of inner wall.
5. Lay the first 1 or 2 courses of brick at flashing level, then install Residential HouseNet™ continuously by placing it against the inside of the openings. No fasteners or adhesives are rquired, and mortar need not have set.
6. Residential HouseNet™ shall not come in contact with wall ties standard wall tile installations, but if it does, it may be cut or torn to accommodate wall ties, conduit, plumbing or other materials that bridge or intrude into cavity between inner and outer walls.
7. Compress Residential HouseNet™ horizontally so it can be forced into cavities slightly smaller than its nominal thickness without affecting Mortar Net or wall performance.
   a. When forcing Residential HouseNet™ into a cavity, be sure mortar has set sufficiently to resist outward pressure from product.

B. Related Products Installation: Refer to other sections for installation of related products as follows:

1. Masonry: Refer to Division 4 Unit Masonry Sections.

3.05 PROTECTION

1. Protection: Protect installed product from damage during construction.

END OF SECTION

Alside BECAUSE LIFE IS FOR LIVING®

3773 STATE ROAD, CUYAHOGA FALLS, OH 44223

MODEL 0100
SINGLE HUNG WINDOW
with NAILING FIN
"NON- IMPACT"

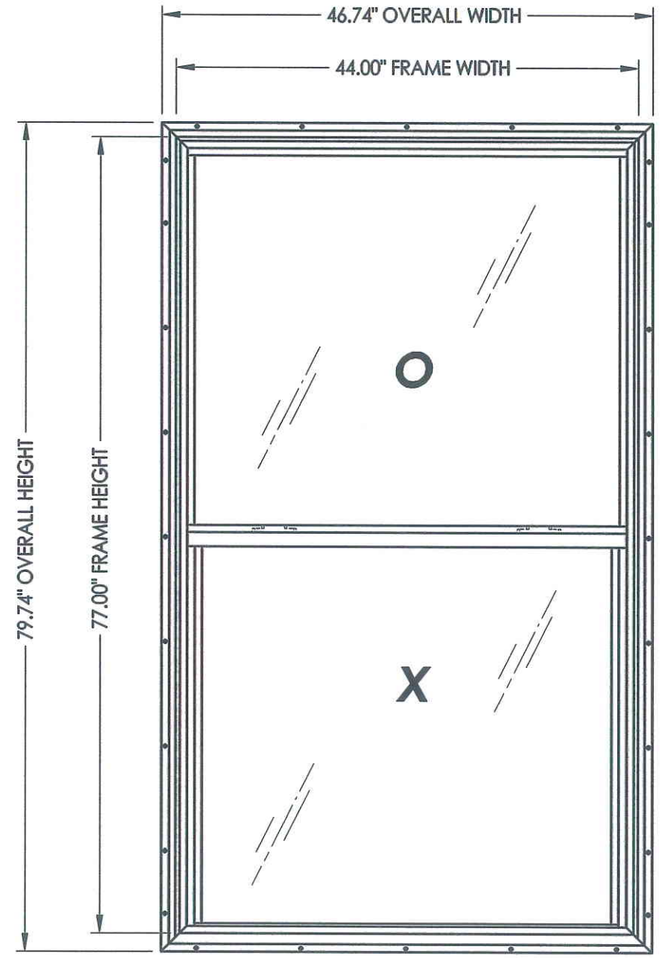

GENERAL NOTES

1. This product has been evaluated and is in compliance with the 2007/2010 Florida Building Code (FBC) structural requirements excluding the "High Velocity Hurricane Zone".
2. Product anchors shall be as listed and spaced as shown on details. Anchor embedment to base material shall be beyond wall dressing or stucco.
3. When used in areas requiring wind borne debris protection this product must be protected with an impact resistant covering that complies with Section 1609.1.2 of the FBC.
4. Site conditions that deviate from the details of this drawing require further engineering analysis by a licensed engineer or registered architect.

TABLE OFCONTENTS

SHEET#	DESCRIPTION
1	Typical elevations, design pressures and general notes
2	Vertical & horizontal cross sections
3	Vertical & horizontal cross sections
4	Buck and frame anchoring
5	Glazing detail, components and bill of materials

1

OVERALL FIN DIMENSION	OVERALL FRAME DIMENSION	OVERALL (O) D.L.O. DIMENSION	OVERALL (X) D.L.O. DIMENSION	GLASS TYPE	DESIGN PRESSURE (PSF)	
					POSITIVE	NEGATIVE
46.74" x 62.74"	44.00" x 60.00"	40.87" x 26.94"	38.87" x 27.31"	G1	+25.0	-40.0
46.74" x 79.74"	44.00" x 77.00"	40.87" x 35.44"	38.87" x 35.81"	G1	+20.0	-20.0

Documents Prepared By:
RW BUILDING CONSULTANTS, INC.
P.O. Box 230 Valrico FL 33595
Phone No.: 813.659.9197
Florida Board of Professional Engineers
Certificate Of Authorization No. 9813
LFS 11.14.11
Lyndon F. Schmidt, P.E. No. 43409

PRODUCT: MODEL 0100 SINGLE HUNG WINDOW "NON-IMPACT"

PART OR ASSEMBLY: TYPICAL ELEVATION, DESIGN PRESSURE AND GENERAL NOTES

NO.	DATE	REVISIONS	BY
2	6/14/11	REVISE TO 2010 FBC	JK
1.	9/02/08	REVISED SHEET LAYOUT	RW

DATE: 03/14/08
SCALE: N.T.S.
DWG. BY: ROF
CHK. BY: LFS
DRAWING NO.: FL-10453.1
SHEET 1 OF 5

© 2009 R.W. BUILDING CONSULTANTS INC.

R:\A - Projects\Project Folders\Proj 1301-1400\PF 1361\D. RWBC Drawings\FL 2010\FL-10453.1-8.dwg

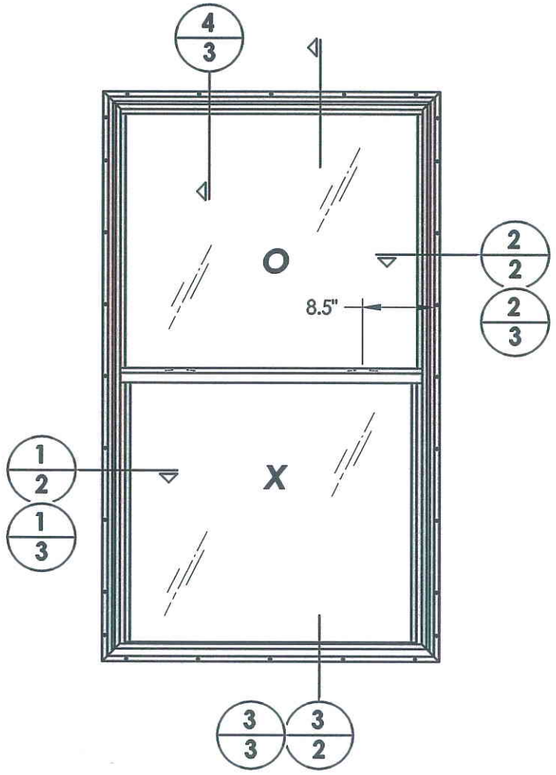

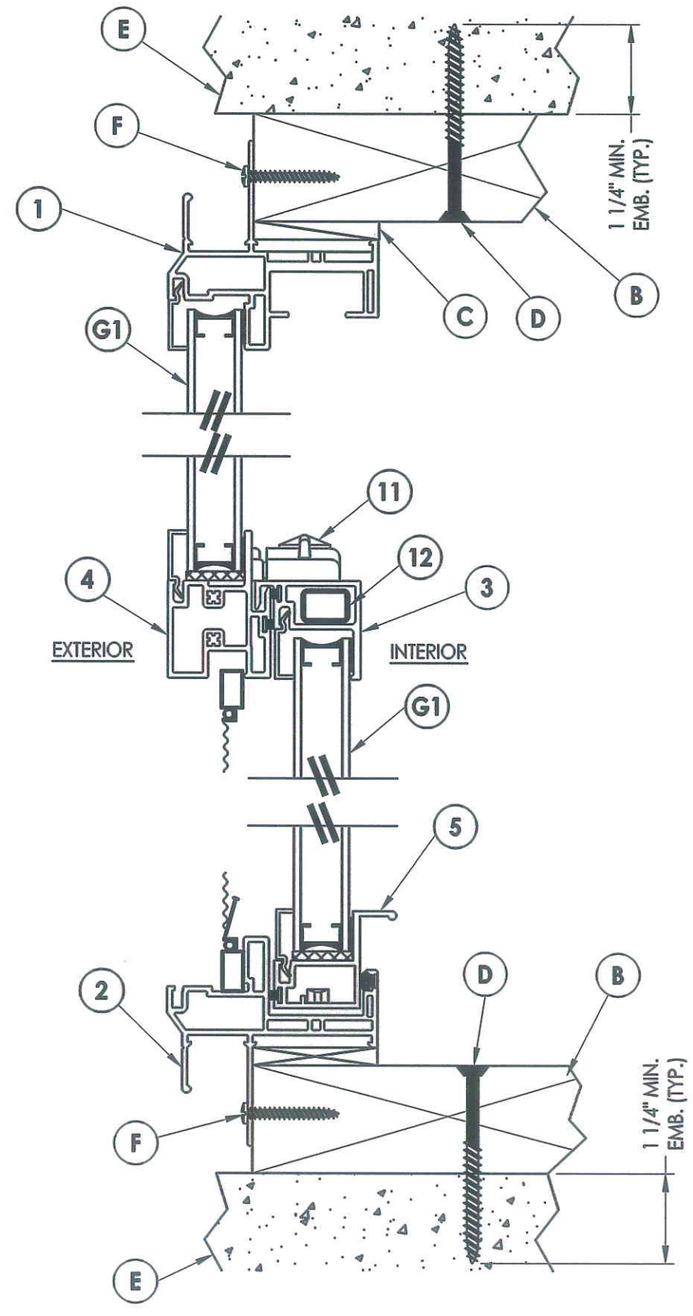

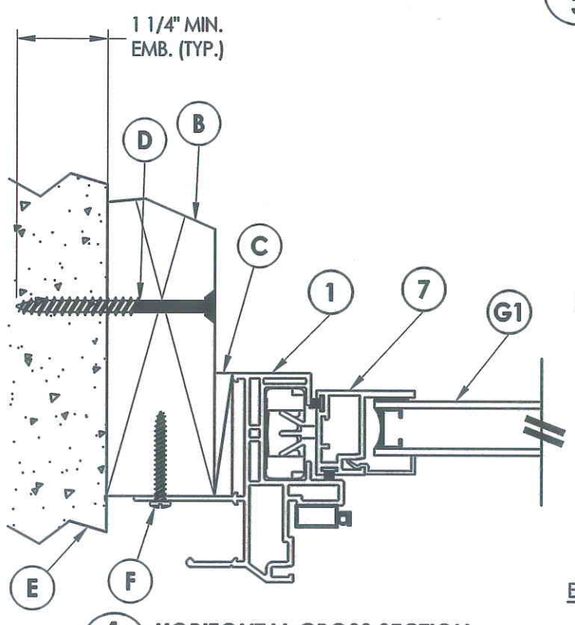

1/2 **HORIZONTAL CROSS SECTION**
Masonry Construction

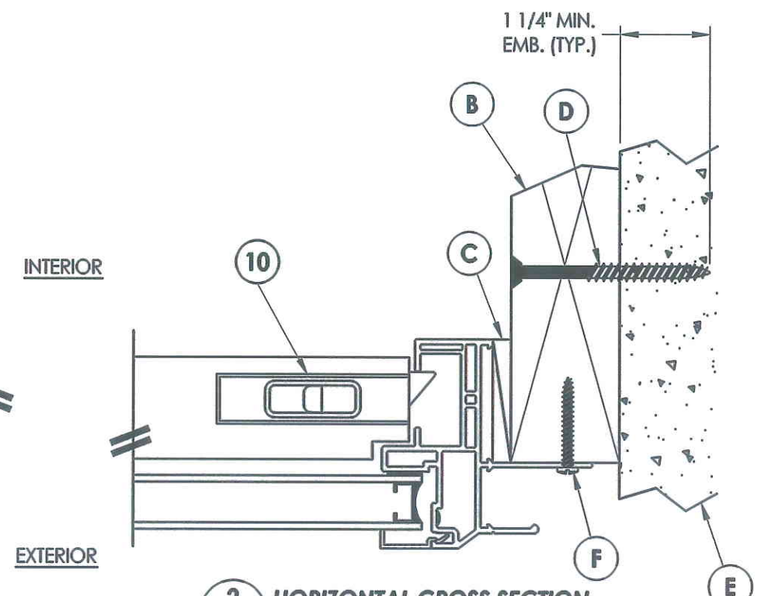

2/2 **HORIZONTAL CROSS SECTION**
Masonry Construction

3/2 **VERTICAL CROSS SECTION**
Masonry Construction

Documents Prepared By:
RW BUILDING CONSULTANTS, INC.
P.O. Box 230 Valrico FL. 33595
Phone No.: 813.659.9197
Florida Board of Professional Engineers
Certificate Of Authorization No. 9813
Lyndon F. Schmidt, P.E. No. 54157

PRODUCT: MODEL 0100
SINGLE HUNG WINDOW
"NON-IMPACT"
PART OR ASSEMBLY:
VERTICAL & HORIZONTAL
CROSS SECTIONS

NO.	DATE	REVISIONS	BY
2	6/14/11	REVISE TO 2010 FBC	JK
1.	9/2/08	REVISED SHEET LAYOUT	RW

DATE: 3/14/08
SCALE: N.T.S.
DWG. BY: ROF
CHK. BY: LFS
DRAWING NO.: FL-10453.1
SHEET 2 OF 5

© 2009 R.W. BUILDING CONSULTANTS INC.

R:\A - Projects\Project Folders\Proj 1301-1400\PF 1361\D. RWBC Drawings\FL 2010\FL-10453.1-8.dwg

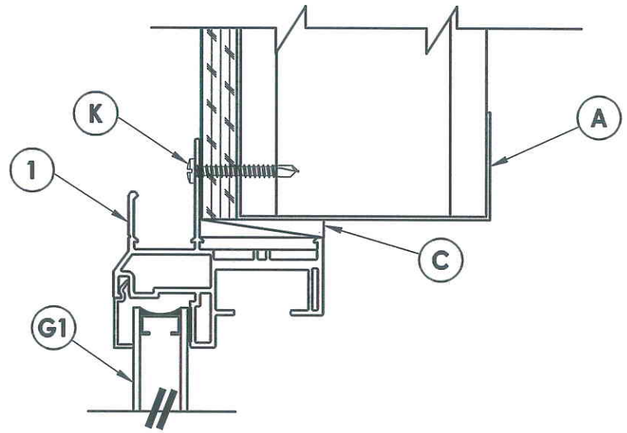

4/3 **VERTICAL CROSS SECTION**
Shown w/ Steel Stud Framing Option

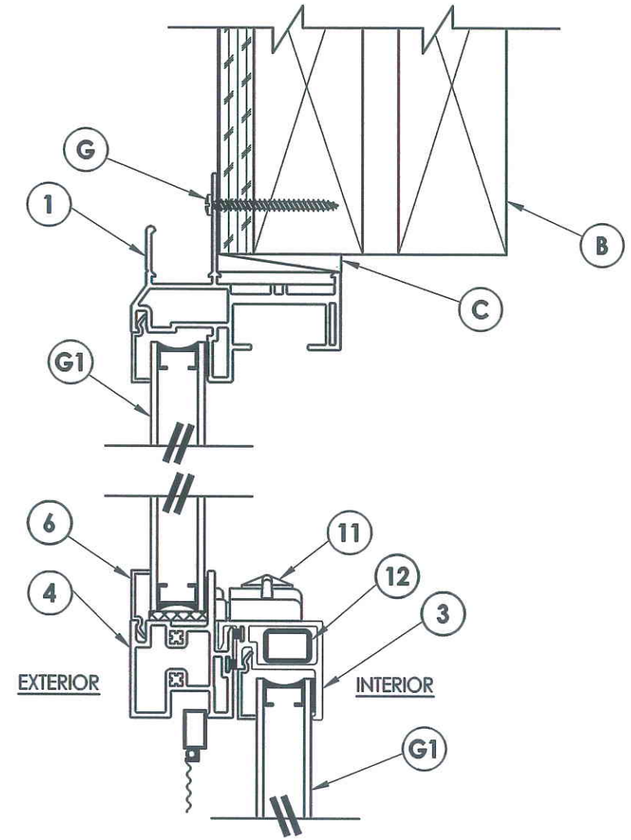

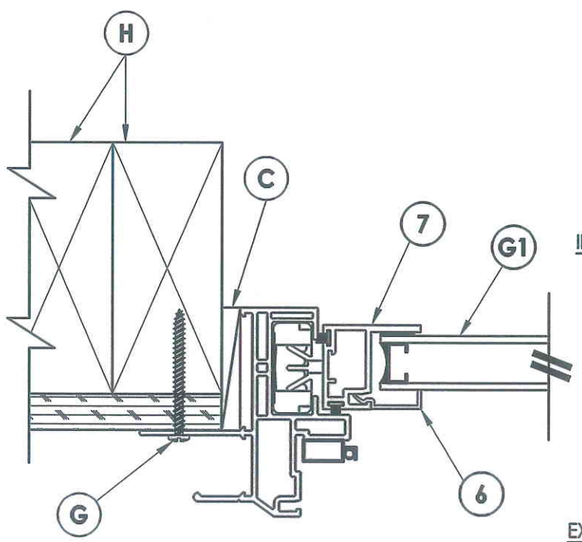

1/3 **HORIZONTAL CROSS SECTION**
2X Stud Construction

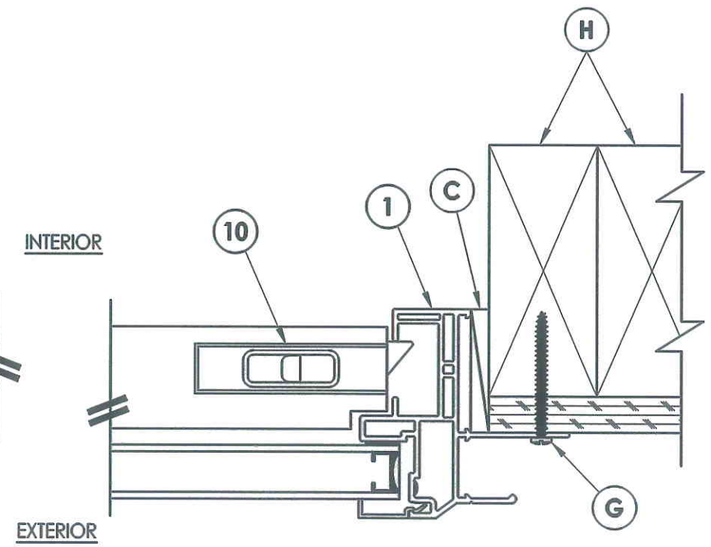

2/3 **HORIZONTAL CROSS SECTION**
2X Stud Construction

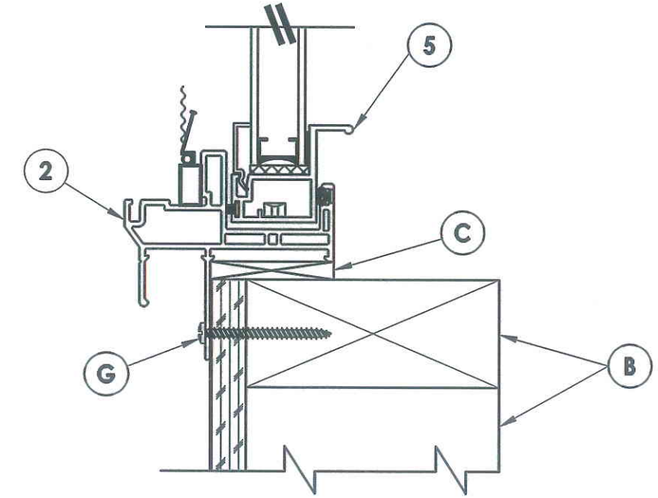

3/3 **VERTICAL CROSS SECTION**
2X Stud Construction

Documents Prepared By:
RW BUILDING CONSULTANTS, INC.
P.O. Box 230 Valrico FL 33595
Phone No.: 813.659.9197
Florida Board of Professional Engineers
Certificate Of Authorization No. 9813
Lyndon F. Schmidt, P.E. No. 54157

PRODUCT: MODEL 0100
SINGLE HUNG WINDOW
"NON-IMPACT"

PART OR ASSEMBLY:
VERTICAL & HORIZONTAL CROSS SECTIONS

NO.	DATE	REVISIONS	BY
2	6/14/11	REVISE TO 2010 FBC	JK
1.	9/2/08	REVISED SHEET LAYOUT	RW

DATE: 3/14/08
SCALE: N.T.S.
DWG. BY: ROF
CHK. BY: LFS
DRAWING NO.: FL-10453.1
SHEET 3 OF 5

© 2009 R.W. BUILDING CONSULTANTS INC.

R:\A - Projects\Project Folders\Proj 1301-1400\PF 1361\D. RWBC Drawings\FL 2010\FL-10453.1-8.dwg

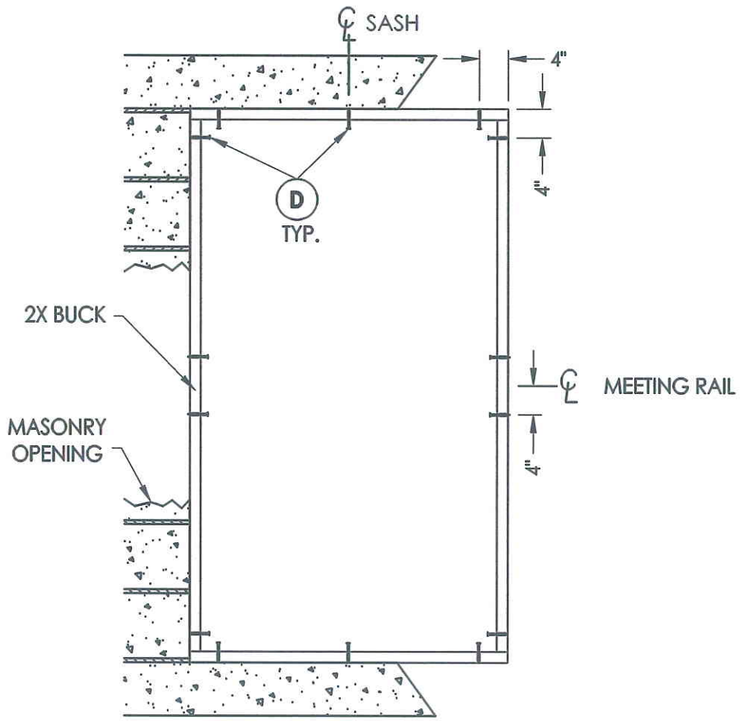

BUCK ANCHORING

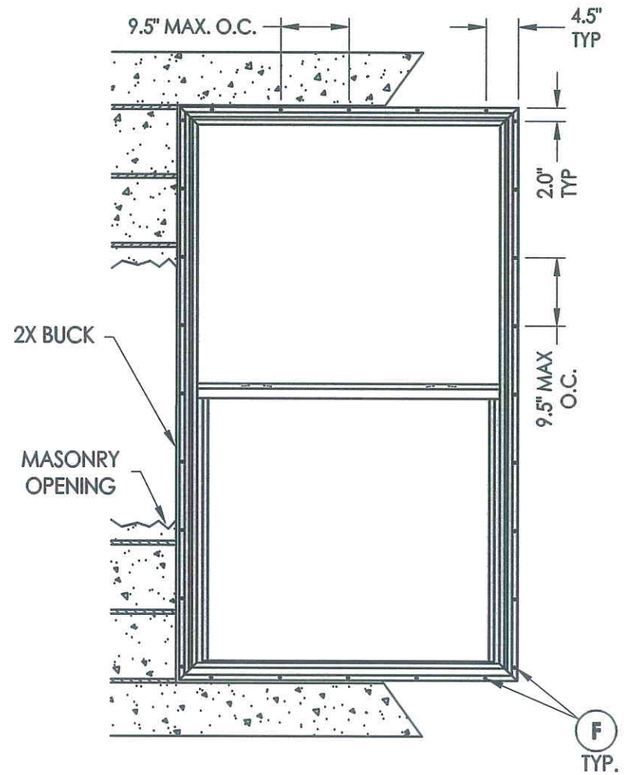

FRAME ANCHORING
Masonry 2X Buck Construction

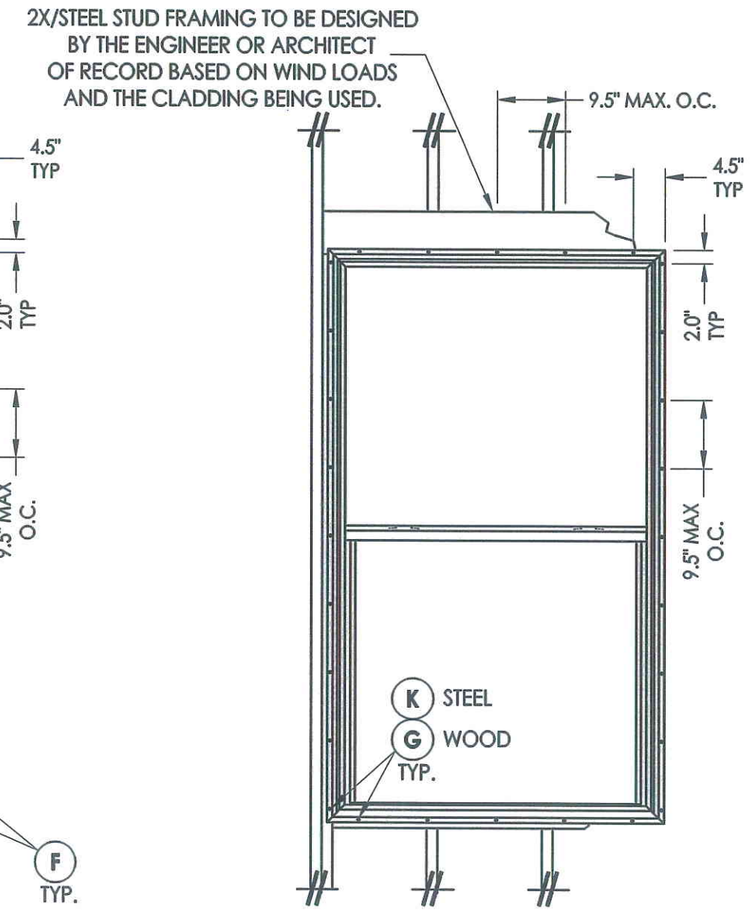

FRAME ANCHORING
Stud Construction

CONCRETE ANCHOR NOTES:

1. Substitution of equal concrete anchors from a different supplier may have different edge distance and center distance requirements.
2. Concrete anchor locations at the corners may be adjusted to maintain the min. edge distance to mortar joints. If concrete anchor locations noted as "MAX. ON CENTER" must be adjusted to maintain the min. edge distance to mortar joints, additional concrete anchors may be required to ensure the "MAX. ON CENTER" dimensions are not exceeded.
3. Concrete anchor table:

ANCHOR TYPE	ANCHOR SIZE	MIN. EMBEDMENT	MIN. CLEARANCE TO MASONRY EDGE	MIN. CLEARANCE TO ADJACENT ANCHOR
ITW	1/4"	1-1/4"	2-1/2"	3"
ELCO	1/4"	1-1/4"	1"	4"

Documents Prepared By:
RW BUILDING CONSULTANTS, INC.
P.O. Box 230 Valrico FL. 33595
Phone No.: 813.659.9197
Florida Board of Professional Engineers
Certificate Of Authorization No. 9813
Lyndon F. Schmidt, P.E. No. 54157

PRODUCT: MODEL 0100
SINGLE HUNG WINDOW
"NON-IMPACT"

PART OR ASSEMBLY:
BUCK AND FRAME ANCHORING

NO.	DATE	REVISIONS	BY
2	6/14/11	REVISE TO 2010 FBC	JK
1.	9/2/08	REVISED SHEET LAYOUT	RW

DATE: 3/14/08
SCALE: N.T.S.
DWG. BY: ROF
CHK. BY: LFS
DRAWING NO.: FL-10453.1
SHEET 4 OF 5

© 2009 R.W. BUILDING CONSULTANTS INC.

R:\A - Projects\Project Folders\Proj 1301-1400\PF 1361\D. RWBC Drawings\FL 2010\FL-10453.1-8.dwg

BILL OF MATERIALS

ITEM #	DESCRIPTION	MATERIAL
A	STEEL STUD Min. Thk .033" (ASTM A653 GRADE 33 Fy=33 Ksi Min, Fu=45 Ksi Min)	STEEL
B	2X BUCK SG >= 0.55	WOOD
C	1/4" MAX. SHIM SPACE	-
D	1/4" X 2-3/4" ELCO OR ITW CONCRETE SCREW	STEEL
E	MASONRY - 3,192 PSI MIN. CONCRETE CONFORMING TO ACI 301 OR HOLLOW BLOCK CONFORMING TO ASTM C90	CONCRETE
F	#8 X 2" PPH SMS	STEEL
G	#8 X 2-1/2" PPH SMS	STEEL
H	2X FRAMING SG >= 0.42	WOOD
K	#10 x 1-1/2" PPH SELF-DRILLING SMS	STEEL
1	MAIN FRAME - HEAD AND JAMB*	RIGID PVC
2	MAIN FRAME - SILL*	RIGID PVC
3	SASH - LOCK RAIL*	RIGID PVC
4	FIXED RAIL*	RIGID PVC
5	SASH - BOTTOM RAIL*	RIGID PVC
6	GLAZING BEAD*	RIGID PVC
7	SASH - STILES*	RIGID PVC
8	GLAZING SPACER	STEEL
9	GLAZING TAPE - DOUBLE SIDE ADHESIVE	-
10	TILT LATCH	POLYMER
11	METAL CAM LOCK AND KEEPER	STEEL
12	REINFORCEMENT - ALSIDE #UY00B2	STEEL
14	GLAZING BLOCK	-

* THE APPROVED WHITE RIGID PVC EXTERIOR EXTRUSIONS FOR WINDOWS ARE TO BE PRODUCED BY EXTRUDERS LICENSEES IN "AAMA CERTIFICATION PROGRAMS FOR RIGID PVC EXTRUSIONS".

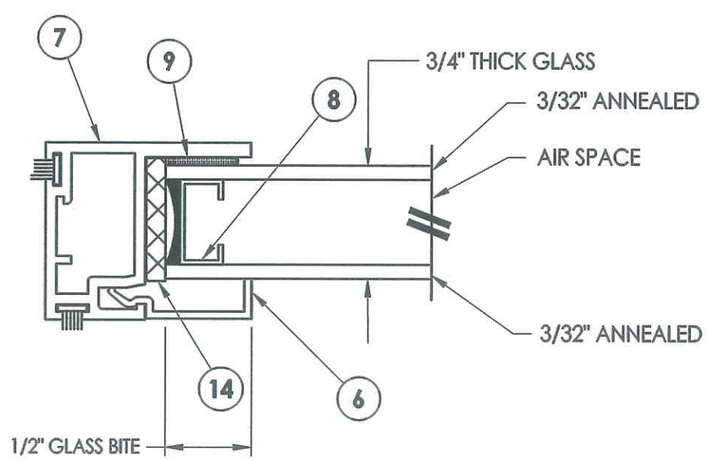

G1 GLAZING DETAIL

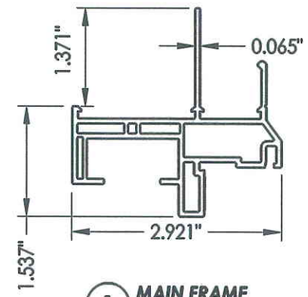

1 MAIN FRAME
Head & Jambs

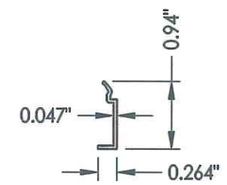

6 GLAZING BEAD

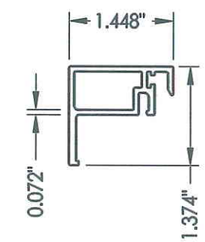

3 SASH-LOCK RAIL

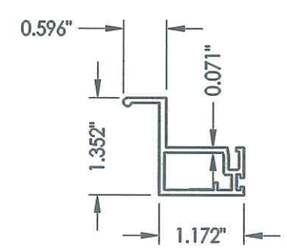

5 SASH-BOTTOM RAIL

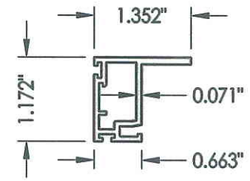

7 SASH-STILE

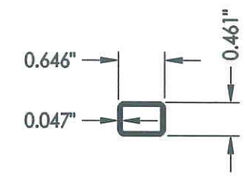

12 REINFORCEMENT

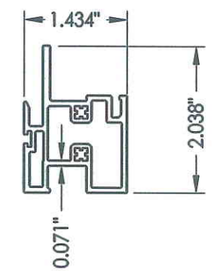

4 FIXED RAIL

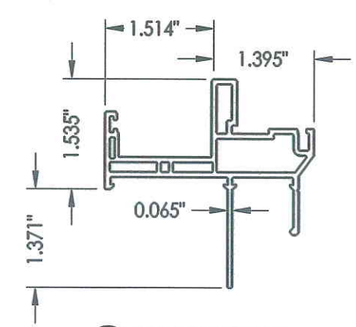

2 MAIN FRAME-SILL

Documents Prepared By:
RW BUILDING CONSULTANTS, INC.
P.O. Box 230 Valrico FL 33595
Phone No.: 813.659.9197
Florida Board of Professional Engineers
Certificate Of Authorization No. 9813
Lyndon F. Schmidt, P.E. No. 54157
11-14-11

PRODUCT: MODEL 0100
SINGLE HUNG WINDOW
"NON-IMPACT"

PART OR ASSEMBLY:
GLAZING DETAIL, COMPONENTS AND BILL OF MATERIALS

NO.	DATE	REVISIONS	BY
2	6/14/11	REVISE TO 2010 FBC	JK
1.	9/2/08	REVISED SHEET LAYOUT	RW

DATE: 3/14/08
SCALE: N.T.S.
DWG. BY: ROF
CHK. BY: LFS
DRAWING NO.: FL-10453.1
SHEET 5 OF 5

© 2009 R.W. BUILDING CONSULTANTS INC.

R:\A - Projects\Project Folders\Proj 1301-1400\PF 1361\D. RWBC Drawings\FL 2010\FL-10453.1-8.dwg

WINDOW APPLICATION

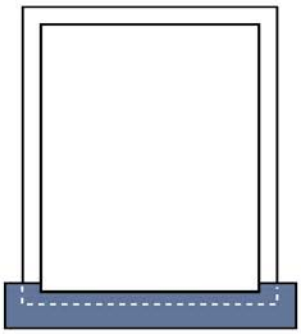

1. Apply a piece of BT25XL on top of the window sill prior to setting the window.

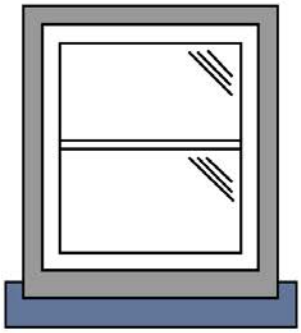

2. Set the window and mechanically fasten the fins to the building substrate.

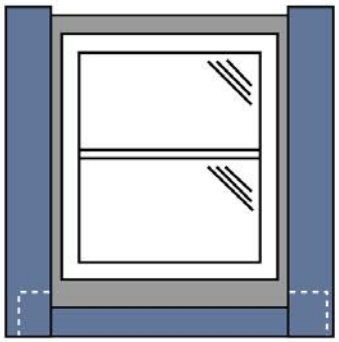

3. Apply the vertical pieces of BT25XL on top of the window fin.

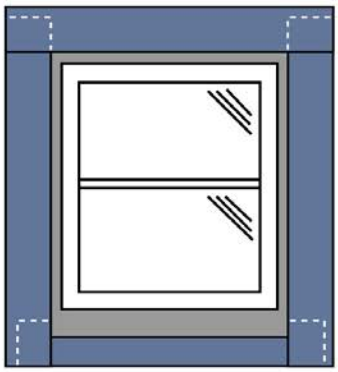

4. Apply the final top horizontal piece of BT25XL on the top of the window fin.

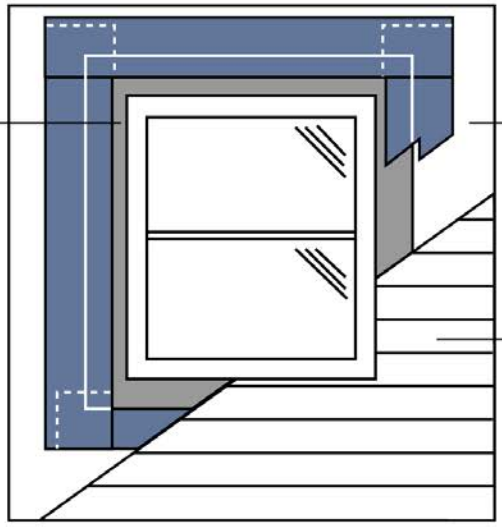

5.

BT-PRIMER and PROTECTO-TAK SPRAY ADHESIVE DATA SHEET

DESCRIPTION:

BT-Primer and Protecto-Tak Spray Adhesive are high tack primers for use under the BT-Series products over Dens-Glass Gold*, all OSB board, black sheathing board, metal, wood, dry concrete and dry masonry. When used over Dens-Glass Gold*, BT-Primer is moisture tolerant and is suitable for use on moist or damp Dens-Glass Gold*. BT-Primer is VOC compliant.

PROPERTIES:

	BT-Primer	Protecto-Tak Spray Adhesive
Adhesion to wood	Excellent	Excellent
Adhesion to steel	Excellent	Excellent
Adhesion to dry concrete	Excellent	Excellent
Adhesion to dry masonry	Excellent	Excellent
Adhesion to membrane	Excellent	Excellent
Coverage	150 sq. ft./gal.	2 oz: 4" x 100' roll
Shelf life (min.)	One Year	One Year
Tack free time (minutes)	10-20 minutes	10 sec to 15 min
Flash Point	24˚F TCC	-42˚F TCC

DIRECTIONS FOR USE:

PREPARATION:

BEFORE HANDLING read material safety data sheets for health information.

- The surface shall be cleaned so that all dirt, dust, loose concrete, or other contaminants that may adversely affect the adhesion of the membrane are removed.

BT-PRIMER APPLICATION:

- Apply primer to all surfaces by roller or brush.
- Primed surface shall be free of runs, puddles or excessive primer as this could cause blistering. Brush or roll out all primer puddles or drips immediately.
- Prime only as much area as can be covered in half a day's work. Re-prime areas not covered in half a day's work with a light coat of BT-Primer.
- Tack free time is approximately 10 to 20 minutes.

NOTE: Some bubbling in the primer may occur on the surface as it cures. This has no effect on the performance of the product and will smooth out as the membranes are applied.

PROTECTO-TAK SPRAY ADHESIVE APPLICATION:

- Shake can before using.
- Turn spray tip so arrow points to dot on rim.
- Hold can 6 – 8 inches from surface to be sprayed and apply to surface.
- After use, invert can, depress spray tip until spray is free of adhesive. Clean spray tips with turpentine.
- Clean oversprayed areas with a mix of 25% - 30% water added to isopropyl alcohol.

PACKAGING AND WEIGHTS:

BT-PRIMER

QUANTITY	PACKAGING	WEIGHT
1 U.S. Gallon	4 gallons/carton	38 lbs
5 U.S. Gallon pail	1 pail	46 lbs

PROTECTO-TAK SPRAY ADHESIVE

QUANTITY	PACKAGING	WEIGHT
16.5 oz can	12 cans/carton	19 lbs

**Dens-Glass is a registered trademark of Georgia-Pacific Corporation*

BT25XL 01 10/05

Premium Building Products
That Protect

1955 South Cherokee St., Denver, Colorado 80223
(303) 777-3001 • Fax (303) 777-9273 • 1-800-759-9727
www.protectowrap.com

BT25XL Window and Door Sealing Tape

Forms a permanent waterproofing air/vapor seal around doors and windows that prevents air and moisture leaks.

- Stop moisture intrusion that causes black mold
- No special tools needed, peel and stick installation
- Meets or exceeds all building codes including ASTM 2112
- Meets or exceeds ICC Code Approval ESR1825
- The only flashing tape that passed hurricane level windblown rain test ASTM E331-90
- Adheres to vinyl, plywood, OSB, foam, metal, aluminum, and masonry
- Can be left exposed up to 120 days

Protecto Wrap's building tape **BT25XL** is a tough-faced superior self-adhering, air/vapor barrier and waterproofing membrane for vertical and horizontal above grade substrates. **BT25XL** seals window perimeters to building substrates to create an impenetrable barrier. This 20-mil polyethylene-backed aggressive rubberized adhesive membrane can be applied to vinyl, plywood, OSB, concrete, metal, aluminum, polyethylene, building wrap products, block and masonry surfaces to form an air/vapor moisture barrier system. **BT25XL is the only window sealing tape that can be installed and left exposed for 120 days without UV degradation.**

EASE OF INSTALLATION

Since BT25XL is a peel and stick self-adhering membrane, you simply center the tape over the area to be sealed and firmly **roll** the BT25XL against the surface. BT25XL also seals itself around nails, screws and staples.

ENERGY EFFICIENT

Not only will BT25XL waterproof around doors and windows, it stops air leakage, thus reducing heating and air conditioning costs to the homeowner.

Using this field tested product will prove that you are a builder who cares about providing the highest quality building materials to your customers.

Protecto Wrap's BT25XL is suitable for sealing the following applications:

- Window and door perimeters to the building substrate
- Joints in stucco insulation systems
- Sheet rock joints in roof assemblies
- Beneath metal cap flashings
- Full building coverage as an air/vapor barrier
- Sealing joints on gypsum sheathing in cavity wall construction
- Other areas where a water or air seal is required.

APPLICATION

There should be no solvent-based caulks used in conjunction with Protecto Wrap BT25XL.

Surfaces should be clean, dry, free of dirt and other foreign matter. For best results, BT25XL should be applied at a temperature above 45°F (7°C). For applications from 20°F to 45°F (-6°C to 7°C), the material must be stored in a warm area prior to use and used with Protecto Wrap BT-Primer or Protecto-Tak Spray Adhesive. When used as an air/vapor barrier system, all lap and butt joints must overlap a minimum of 4". Masonry ties should be placed on top of the BT25XL and sealed with Protecto Wrap's JS160H Mastic. Cut a piece of BT25XL in a length that can be easily handled. Begin application by removing approximately 12 inches of the release paper and center the tape over the area being sealed. **Firmly roll** the BT25XL against the surface and continue pulling off the release paper while rolling the tape into place. Rolling the BT25XL is essential to gain 100% surface contact of the BT25XL adhesive to the substrate and will minimize trapping air beneath the tape. **Do not stretch BT25XL.** Lap building wrap material 4" on top of BT25XL and seal the building wrap to BT25XL.

NOTE: When applying BT25XL to masonry, concrete, black sheathing board and OSB products or Dens-Glass Gold*, the surface must be primed with Protecto Wrap BT-Primer or Protecto-Tak Spray Adhesive.

**Dens-Glass is a registered trademark of Georgia-Pacific Corporation*

WINDOW APPLICATION

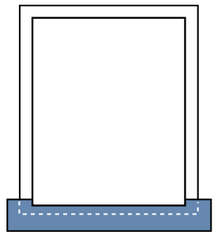

1. Apply a piece of BT25XL on top of the window sill prior to setting the window.

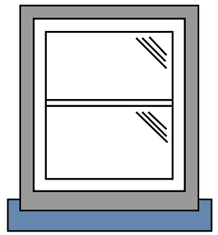

2. Set the window and mechanically fasten the fins to the building substrate.

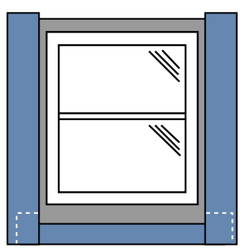

3. Apply the vertical pieces of BT25XL on top of the window fin.

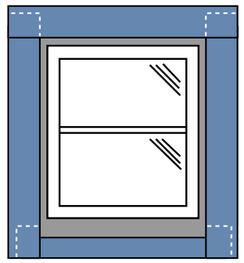

4. Apply the final top horizontal piece of BT25XL on the top of the window fin.

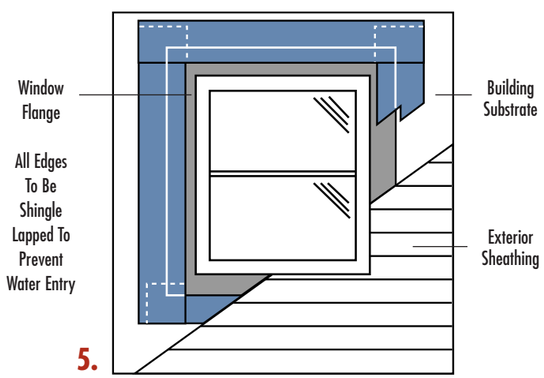

5.

BT25XL as a Seam Sealing Tape

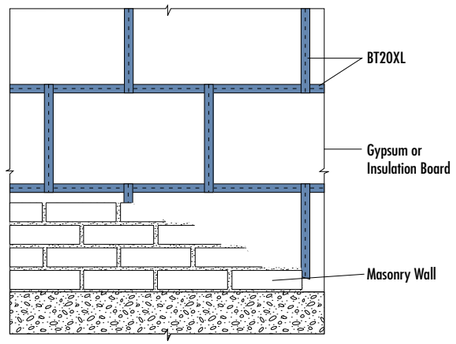

BT25XL for Cavity Wall Protection

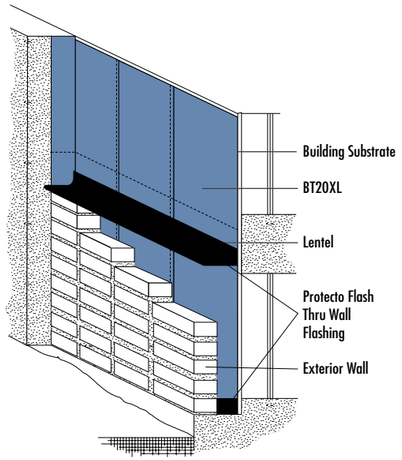

BT25XL as a Thru-Wall Flashing

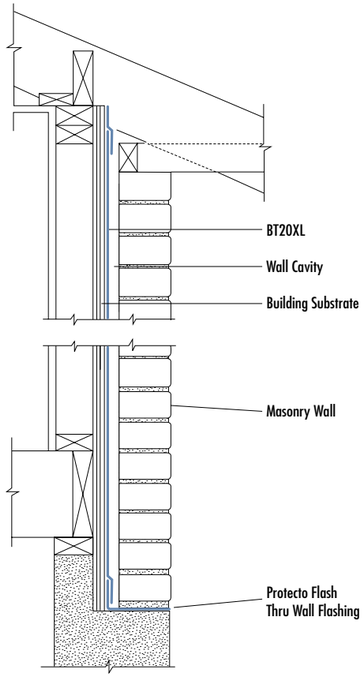

TESTING

BT25XL is the only flashing tape to pass hurricane level wind-driven rain testing. (ASTM E331-90, test method for water penetration of exterior windows.) Meets ASTM 2112. Meets or exceeds ICC Code Approval ESR1825.

PROPERTIES

		Test Method
Color:	White	
Thickness:	25+ mils	
Tensile Strength:	975 psi	ASTM D412
Elongation:	over 500% (rubberized adhesive only)	ASTM D412
Moisture Vapor Transmission Rate:	0.01 perms max.	ASTM E96
Max. Exposure Time:	120 Days	

PRECAUTIONS

1. Rolling the BT25XL is essential to gain 100% surface contact of the BT25XL adhesive to the substrate and will minimize trapping air beneath the tape.
2. When Protecto Wrap's BT25XL is used as an air/vapor barrier, the dew point must be engineered to the exterior of the building.
3. Care should be taken not to leave the membrane exposed to direct sunlight for over 120 days.
4. Any caulking that contains solvents must not be used on or around the BT25XL membrane.
5. Do not stretch BT25XL. Stretching will adversely affect the adhesion of the product.
6. BT-Primer or Protecto-Tak Spray Adhesive must be used in applications with temperatures below 45°F (7°C).
7. BT-Primer or Protecto-Tak Spray Adhesive must be used on weathered surfaces, masonry, concrete and Dens-Glass Gold*, black sheathing board and OSB.
8. Some chemicals used in the production of OSB may adversely affect the adhesion of BT25XL. BT-Primer or Protecto-Tak Spray Adhesive will enhance the adhesion of BT25XL to OSB.
9. BT25XL must be stored in a location with temperatures above 50°F (10°C).
10. Protecto Wrap's EIFS Tape is recommended if stucco is to be applied directly to the air/vapor barrier.

HDU Holdown

VALUE ENGINEERED

HDU Holdowns are pre-deflected during the manufacturing process, virtually eliminating deflection under load due to material stretch. They use Simpson Strong-Tie® Strong-Drive® screws (SDS) which install easily and provide reduced fastener slip. Using SDS screws results in a greater net section, when compared to bolts, as no material is removed.

The HDU series of holdowns are designed to replace previous versions of the product such as PHD's as well as bolted holdowns. The HDU2, 4 and 5 are direct replacements for the PHD2, 5 and 6, respectively.

For more information on holdown options, contact Simpson Strong-Tie.

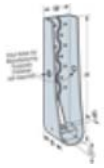

Load Table
Gallery of images
Code Reports
Drawings
Catalog Page
Anchoring Solutions
Related Categories
Fliers
Help for downloads

Special Features:

- Pre-deflected body virtually eliminates deflection due to material stretch.
- Uses SDS screws which install easily, reduces fastener slip, and provides a greater net section area of the post compared to bolts.
- SDS screws are supplied with the holdowns to ensure proper fasteners are used.
- No stud bolts to countersink at openings.

Material: See table.

Finish: Galvanized.

Installation:

- Use all specified fasteners. See General Notes.
- For use in vertical and horizontal applications.
- No additional washer required.
- To tie multiple 2x members together, the Designer must determine the fasteners required to join the members to act as one unit without splitting the wood. See SDS Screw information.
- See SB and SSTB Anchor Bolts for anchorage options.
- SDS screws install best with a low speed high torque drill with a 3/8" hex head driver.
- Refer to Anchor Designer Software™ for ACI 318 for anchoring solutions.

For holdowns, per ASTM test standards, anchor bolt nuts should be finger-tight plus 1/3 to 1/2 turn with a hand wrench, with consideration given to possible future wood shrinkage. Care should be taken to not over-torque the nut. Impact wrenches should not be used.

Gallery:

▲top

roll over images below to see larger image

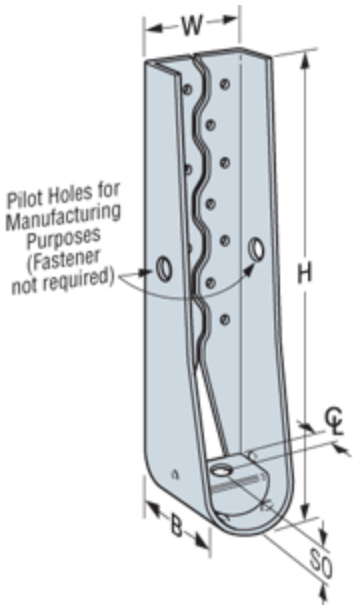

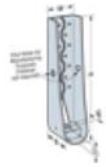

HDU
U.S. Patent
6,112,495

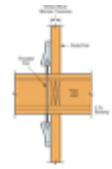

Typical HDU Tie Between Floors

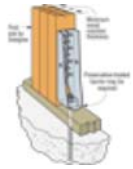

Vertical HDU Installation

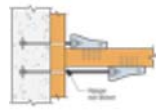

Horizontal HDU Offset Installation

(Plan View)
See footnote 7.

Load Table:

See code report listings below

▲top

Model No.	Ga	Dimensions (in.)					Fasteners		Minimum Wood Member Thickness[4] (in.)	Allowable Tension Loads (I (160)[1]		
		W	H	B	℄	SO	Anchor Bolt Dia. (in.)	SDS Screws		DF/SP	SPF/HF	Def Allow
HDU2-SDS2.5	14	3	8 11/16	3¼	1 5/16	1⅜	⅝	6-SDS ¼"x2½"	3	3075	2215	
HDU4-SDS2.5	14	3	10 15/16	3¼	1 5/16	1⅜	⅝	10-SDS ¼"x2½"	3	4565	3285	
HDU5-SDS2.5	14	3	13 3/16	3¼	1 5/16	1⅜	⅝	14-SDS ¼"x2½"	3	5645	4065	
HDU8-SDS2.5	10	3	16⅝	3½	1⅜	1½	⅞	20-SDS ¼"x2½"	3	5980	4305	
									3½	6970	5020	
									4½	7870	5665	
HDU11-SDS2.5	10	3	22¼	3½	1⅜	1½	1	30-SDS ¼"x2½"	5½	9535	6865	
									7¼	11175	8045	
HDU14-SDS2.5	7	3	25 11/16	3½	1 9/16	1 9/16	1	36-SDS ¼"x2½"	7¼	14390[9]	10360	
									5½[8]	14925[8,9]	10745	

1. Allowable loads have been increased for wind or earthquake load durations with no further increase allowed; reduce where other load durations govern.
2. The Designer must specify anchor bolt type, length and embedment. See SB and SSTB Anchor Bolts. Refer to Anchor Designer Software™ for ACI 318 for anchoring solutions.
3. Structural composite lumber columns have sides that show either the wide face or the edges of the lumber strands/veneers. Values in the tables reflect installation into the wide face. See technical bulletin T-SCLCOLUMN for values on the narrow face (edge).
4. Post design by Specifier. Allowable load values are based on a minimum wood member thickness in the direction of the fastener penetration. Posts may consist of multiple 2x members provided they are designed to act as one unit independently of the holdown fasteners. Holdowns shall be installed centered along the width of the attached post.
5. Tension values are valid for holdowns flush or raised off of sill plate.
6. Deflection at Highest Allowable Tension Load includes fastener slip, holdown elongation, and anchor bolt elongation (L = 6"). Additional elongation of anchor bolts longer than 6" shall be added to holdown deflection.
7. Tabulated loads may be doubled when the HDU is installed on opposite sides of the wood member provided either the post is large enough to prevent opposing holdown screw inferference or the holdowns are offset to eliminate screw interferences.
8. Noted HDU14 allowable loads are based on a 5 1/2" wide post (6x6 min.).All other loads are based on 3 1/2" wide post minimum.
9. Requires heavy hex anchor nut to achieve tabulated loads (supplied with holdown).

Code Reports (PDFs):

▲top

					LEGACY REPORTS		
	IAPMO ES ER	ICC-ES ESR	CITY OF LOS ANGELES	STATE OF FLORIDA	ICC-ES NER	ICC-ES ER	ICC-ES ES
HDU	See specific model numbers for code listings.						
HDU11-SDS2.5		ESR-2330 / ESR-2523 *	RR25720	FL10441			
HDU11-SDS2.5		ESR-2330 / ESR-2523 *	RR25720	FL10441			
HDU14-SDS2.5		ESR-2330 / ESR-2523 *	RR25720	FL10441			
HDU14-SDS2.5		ESR-2330 / ESR-2523 *	RR25720	FL10441			
HDU2-SDS2.5		ESR-2330 / ESR-2523 *	RR25720	FL10441			
HDU4-SDS2.5		ESR-2330 / ESR-2523 *	RR25720	FL10441			
HDU5-SDS2.5		ESR-2330 / ESR-2523 *	RR25720	FL10441			
HDU8-SDS2.5		ESR-2330 / ESR-2523 *	RR25720	FL10441			

* ESR-2523 is an Index of many of Simpson Strong-Tie Stamped and Welded Cold-formed Steel Products for Wood or Cold-formed Steel Construction

Drawings:

To download drawings, right-click or Ctrl-click on the link, then choose "Save Target As..."

Download the Simpson AutoCad Menu

DWG

Orthographic

HDU2 HDU2 front view HDU2 right view HDU2 top view HDU4 HDU4 front view HDU4 right view HDU5 HDU5 front view HDU5 right view HDU8 HDU8 front view HDU8 right view HDU11 HDU11 front view HDU11 right view HDU11 top view

DXF

Orthographic

HDU2 HDU2 front view HDU2 right view HDU2 top view HDU4 HDU4 front view HDU4 right view HDU5 HDU5 front view HDU5 right view HDU8 HDU8 front view HDU8 right view HDU11 HDU11 front view HDU11 right view HDU11 top view

Catalog Pages (PDFs):

C-2009 (Wood Construction Connectors), page 37

Order free catalogs by mail

Anchoring Solutions:

Refer to Anchor Designer Software™ for ACI 318 for anchoring solutions.

Related Categories:

Holdowns - Concrete (Wood Construction)

Tension Ties (Wood Construction)

Technical Bulletins (PDFs):

Panelized Roof Systems Expiration extended to 1/31/09

Connectors Installed on SCL Columns

Fliers (PDFs):

The Effects of Wind

New Longer Titen HD®s Can Be Used With Simpson Holdowns

Holdowns for Alternate Braced Wall Panels

Need help with downloads?

© 2009 Simpson Strong-Tie®

Jamsill Guard®

The ORIGINAL Sill Pan Flashing Since 1983!

Door & Window Sill Pan Flashing

MADE IN THE USA

Jamsill Guard®

The ORIGINAL Sill Pan Flashing Since 1983!

Jamsill Guard® is an adjustable sill pan flashing for exterior doors and windows, designed to prevent water damage from window and door leaks.

Jamsill Guard® is injection molded and extruded from high impact ABS plastics that do not facilitate thermal transfer and will not deteriorate or corrode over time. In fact, Jamsill Guard® has been time tested for over 25 years with over 2 million sold.

Jamsill Guard's simple design is inexpensive, easy to install, and more user friendly than other sill pans on the market. Jamsill Guard's multiple piece, telescoping design allows the installer on-site adjustability, to fit all rough openings and is bonded together in the field with P.V.C. cement.

- *Reduce call backs due to water damage*
- *Quick, Simple, and Adjustable Installation*
- *Sloped weep areas direct moisture out*
- *Glue joints located away from door and window leak areas*
- *Multiple-piece design and large glue tabs allow adjustability during install*
- *Accommodates virtually any size rough opening*
- *Available in many different depths, to fit a wide variety of applications*
- *Visit Jamsill.com for more information*

Most leaks originate at...

The Critical Corner

- 1-piece molded corners block leaks before they can damage the framing and sub-floor.
- Sloped weep areas located directly beneath the Jamb-to-Sill joint to direct moisture toward the exterior.
- Large glue joint located well away from the Jamb-to-Sill joint.

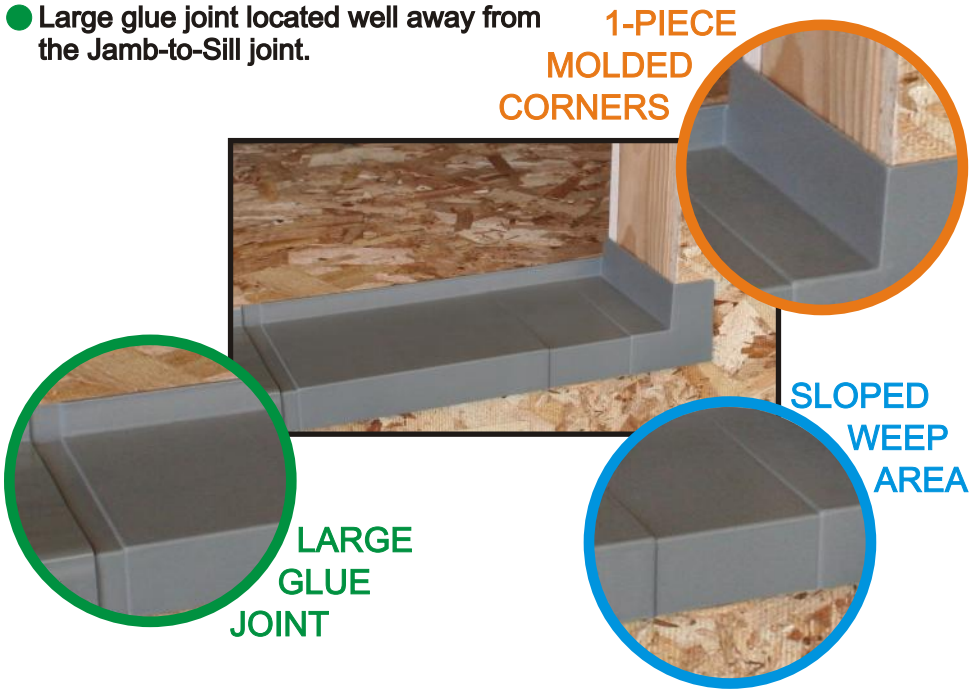

8 Common Depths

- 1 1/8"
- 2 3/8"
- 3 1/4"
- 3 5/8"
- 4 1/8"
- 4 9/16"
- 6 9/16"
- 6 13/16"

Contact Us

Phone:
1-800-JAMSILL (526-7455)

Fax:
1-541-488-7472

Web:
www.jamsill.com

Doors

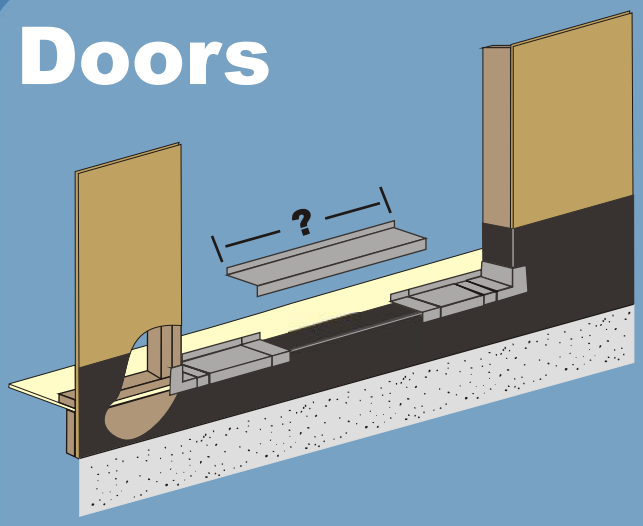

1. Install lower course of housewrap. Place left & right corners tight against framing. Measure center section and cut if necessary maintaining 1 ½" overlap at glue joints. Center section must fit within recessed areas of corner pieces.

Windows

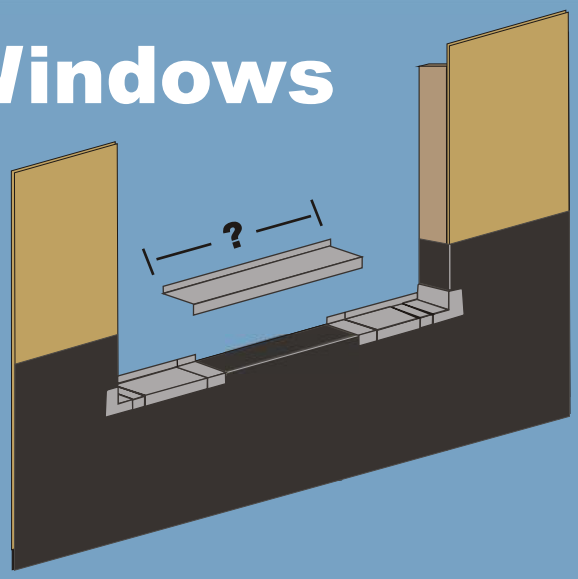

1. Install lower course of housewrap. Place left & right corners tight against framing. Measure center section and cut if necessary maintaining 1 ½" overlap at glue joints. Center section must fit within recessed areas of corner pieces.

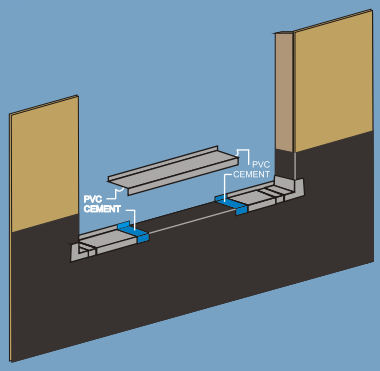

2. Apply PVC cement to the recessed areas of the corner pieces and the underside of the center section where it overlaps the recessed areas. Hold or clamp pieces together long enough to ensure a complete bond.

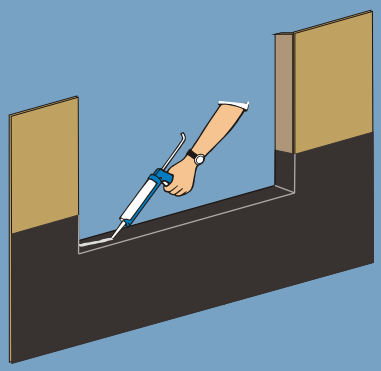

3. Remove pan and apply caulking where the pan will contact the framing. Set pan in caulking.

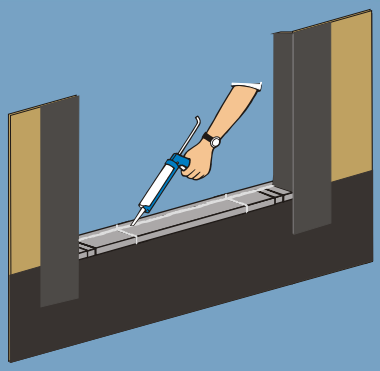

4. Apply caulking to interior edge of pan to seal window frame/door sill to pan. Apply caulking to glue joints for added protection. Adhere flexible flashing to sides of opening, wrapping around from sheathing to studs and shingle over and into the sill pan.

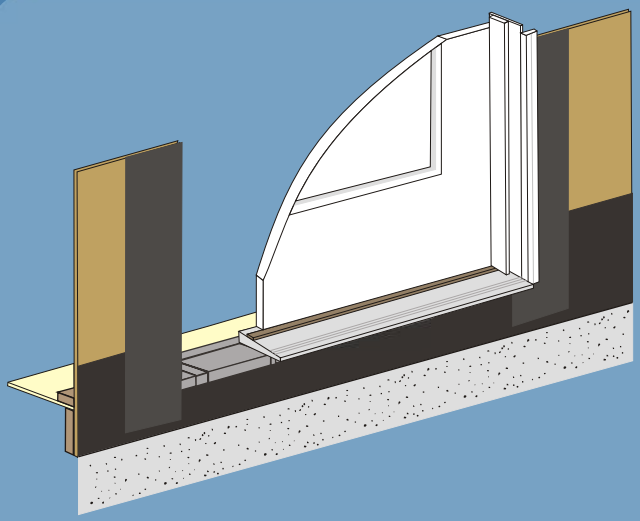

5. Install door. Do not block sloped weep areas.

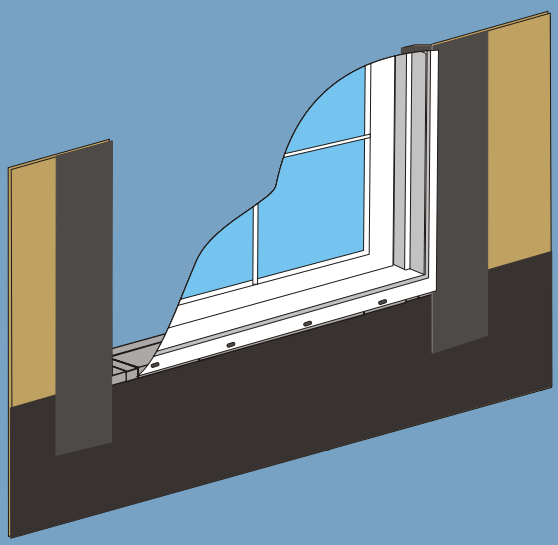

5. Install window. Do not block sloped weep areas.

Jamsill Guard®

The ORIGINAL Sill Pan Flashing Since 1983!

1-800-JAMSILL (526-7455) **jamsill.com**

Prevent moisture damage from leaking doors & windows!

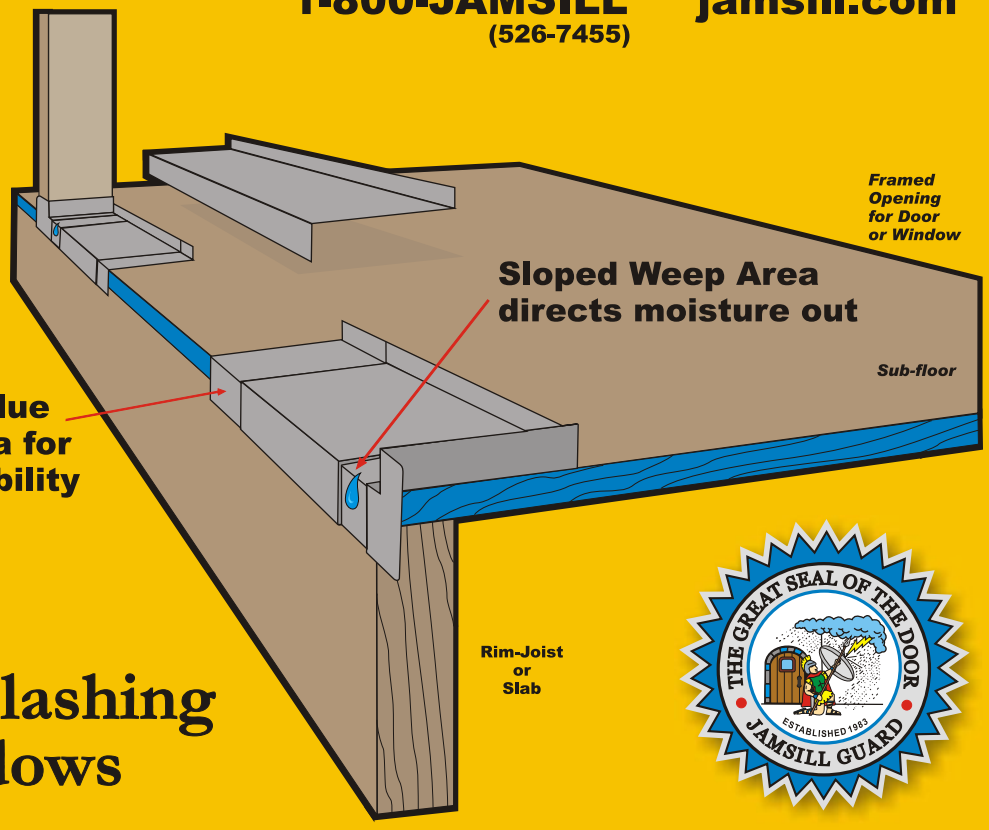

Adjustable Sill Pan Flashing for Doors & Windows

Jamsill Guard®
The *ORIGINAL* Sill Pan Flashing since 1983!
Jamsill, Inc. P.O. Box 485 Talent, OR 97540
1-800-JAMSILL (526-7455) www.jamsill.com

HardiePlank® HZ10® Lap Siding

JamesHardie®

EFFECTIVE SEPTEMBER 2013

INSTALLATION REQUIREMENTS - PRIMED & COLORPLUS® PRODUCTS

Visit www.jameshardie.com for the most recent version.

SELECT CEDARMILL© • SMOOTH • CUSTOM COLONIAL™ SMOOTH • CUSTOM COLONIAL™ ROUGHSAWN
CUSTOM BEADED CEDARMILL© • CUSTOM BEADED SMOOTH • STRAIGHT-EDGE SHINGLE PLANK

IMPORTANT: FAILURE TO INSTALL AND FINISH THIS PRODUCT IN ACCORDANCE WITH APPLICABLE BUILDING CODES AND JAMES HARDIE WRITTEN APPLICATION INSTRUCTIONS MAY LEAD TO PERSONAL INJURY, AFFECT SYSTEM PERFORMANCE, VIOLATE LOCAL BUILDING CODES, AND VOID THE PRODUCT ONLY WARRANTY. BEFORE INSTALLATION, CONFIRM THAT YOU ARE USING THE CORRECT HARDIEZONE™ PRODUCT INSTRUCTIONS. INSTALLATION OF HZ10® PRODUCTS OUTSIDE AN HZ10® LOCATION WILL VOID YOUR WARRANTY. TO DETERMINE WHICH HARDIEZONE™ APPLIES TO YOUR LOCATION, VISIT WWW.HARDIEZONE.COM OR CALL 1-866-942-7343 (866 9HARDIE)

STORAGE & HANDLING:

Store flat and keep dry and covered prior to installation. Installing siding wet or saturated may result in shrinkage at butt joints. Carry planks on edge. Protect edges and corners from breakage. James Hardie is not responsible for damage caused by improper storage and handling of the product.

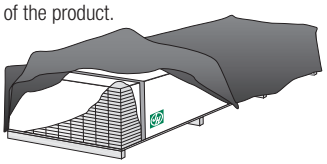

⚠ CUTTING INSTRUCTIONS

OUTDOORS
1. Position cutting station so that wind will blow dust away from user and others in working area.
2. Use one of the following methods:
   - a. Best: i. Score and snap; ii. Shears (manual, electric or pneumatic)
   - b. Better: i. Dust reducing circular saw equipped with a HardieBlade® saw blade and HEPA vacuum extraction
   - c. Good: i. Dust reducing circular saw with a HardieBlade saw blade (only use for low to moderate cutting)

INDOORS
1. Cut only using score and snap, or shears (manual, electric or pneumatic).
2. Position cutting station in well-ventilated area

- NEVER use a power saw indoors
- NEVER use a circular saw blade that does not carry the HardieBlade saw blade trademark
- NEVER dry sweep – Use wet suppression or HEPA Vacuum

Important Note: For maximum protection (lowest respirable dust production), James Hardie recommends always using "Best"-level cutting methods where feasible.

NIOSH-approved respirators can be used in conjunction with above cutting practices to further reduce dust exposures. Additional exposure information is available at www.jameshardie.com to help you determine the most appropriate cutting method for your job requirements. If concern still exists about exposure levels or you do not comply with the above practices, you should always consult a qualified industrial hygienist or contact James Hardie for further information.

SD083105

GENERAL REQUIREMENTS:

- HardiePlank® lap siding can be installed over braced wood or steel studs spaced a maximum of 24" o.c. or directly to minimum 7/16" thick OSB sheathing. See general fastening requirements. Irregularities in framing and sheathing can mirror through the finished application.
- Information on installing James Hardie products over foam can be located in **JH Tech Bulletin 19** at www. jamehardie.com
- A water-resistive barrier is required in accordance with local building code requirements. The water-resistive barrier must be appropriately installed with penetration and junction flashing in accordance with local building code requirements. James Hardie will assume no responsibility for water infiltration. James Hardie does manufacture HardieWrap® Weather Barrier, a non-woven non-perforated housewrap[1], which complies with building code requirements.
- When installing James Hardie products all clearance details in figs. 3-14 must be followed.
- Adjacent finished grade must slope away from the building in accordance with local building codes - typically a minimum of 6" in the first 10'.
- Do not use HardiePlank lap siding in fascia or trim applications.
- Do not install James Hardie products, such that they may remain in contact with standing water.
- HardiePlank lap siding may be installed on flat vertical wall applications only.
- For larger projects, including commercial and multi-family projects, where the span of the wall is significant in length, the designer and/or architect should take into consideration the coefficient of thermal expansion and moisture movement of the product in their design. These values can be found in the Technical Bulletin "Expansion Characteristics of James Hardie® Siding Products" at www.JamesHardie.com.
- DO NOT use stain, oil/alkyd base paint, or powder coating on James Hardie® Products.

Figure 1

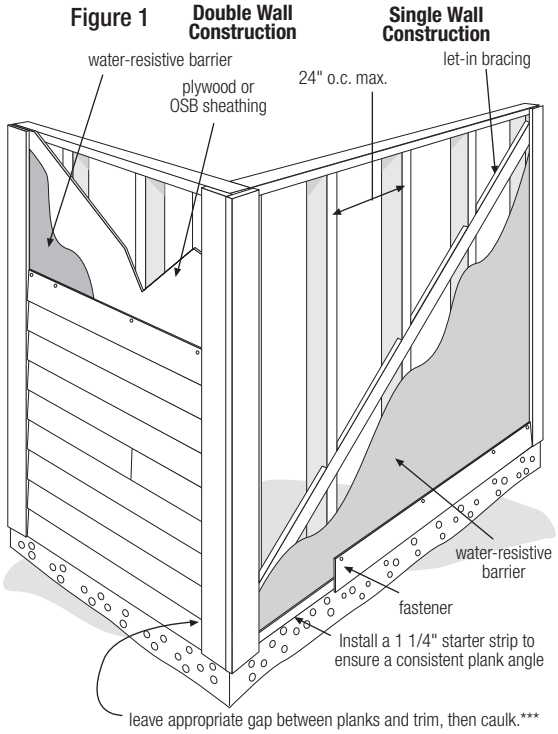

INSTALLATION: JOINT TREATMENT

One or more of the following joint treatment options are required by code (*as referenced 2009 IRC R703.3.2)*

A. Joint Flashing (James Hardie recommended)
B. Caulking* (Caulking is not recommended for ColorPlus for aesthetic reasons as the Caulking and ColorPlus will weather differently. For the same reason, do not caulk nail heads on ColorPlus products.}
C. "H" jointer cover

Figure 2

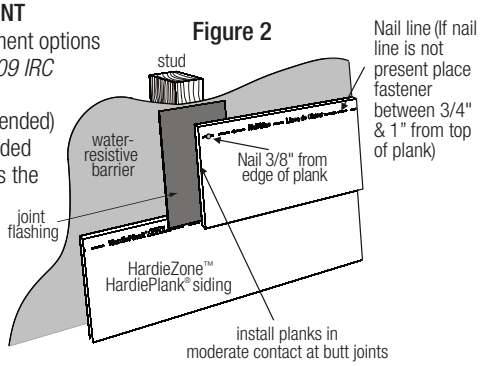

Note: Field painting over caulking may produce a sheen difference when compared to the field painted PrimePlus. *Refer to Caulking section in these instructions.

[1] For additional information on HardieWrap® Weather Barrier, consult James Hardie at 1-866-4Hardie or www.hardiewrap.com

WARNING: AVOID BREATHING SILICA DUST

James Hardie® products contain respirable crystalline silica, which is known to the State of California to cause cancer and is considered by IARC and NIOSH to be a cause of cancer from some occupational sources. Breathing excessive amounts of respirable silica dust can also cause a disabling and potentially fatal lung disease called silicosis, and has been linked with other diseases. Some studies suggest smoking may increase these risks. During installation or handling: (1) work in outdoor areas with ample ventilation; (2) use fiber cement shears for cutting or, where not feasible, use a HardieBlade® saw blade and dust-reducing circular saw attached to a HEPA vacuum; (3) warn others in the immediate area; (4) wear a properly-fitted, NIOSH-approved dust mask or respirator (e.g. N-95) in accordance with applicable government regulations and manufacturer instructions to further limit respirable silica exposures. During clean-up, use HEPA vacuums or wet cleanup methods - never dry sweep. For further information, refer to our installation instructions and Material Safety Data Sheet available at www.jameshardie.com or by calling 1-800-9HARDIE (1-800-942-7343). FAILURE TO ADHERE TO OUR WARNINGS, MSDS, AND INSTALLATION INSTRUCTIONS MAY LEAD TO SERIOUS PERSONAL INJURY OR DEATH.

SD050905

CLEARANCE AND FLASHING REQUIREMENTS

Figure 3
Roof to Wall

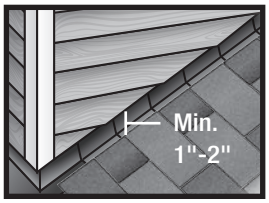

Figure 4
Horizontal Flashing

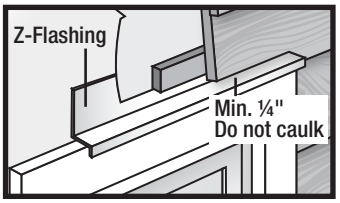

Figure 5
Kickout Flashing

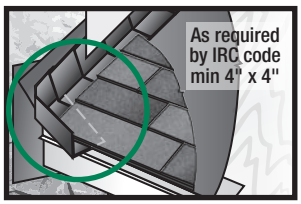

Figure 6
Slabs, Path, Steps to Siding

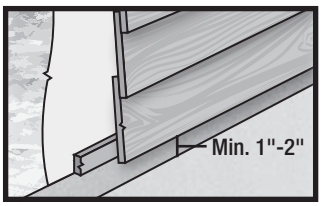

Figure 7
Deck to Wall

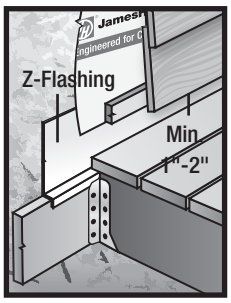

Figure 8
Ground to Siding

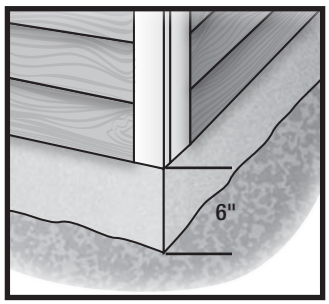

Figure 9
Gutter to Siding

Figure 10
Sheltered Areas

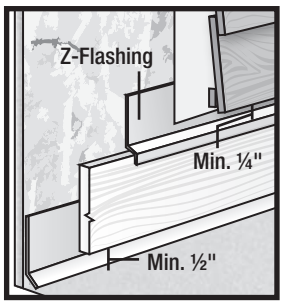

Figure 11
Mortar/Masonry

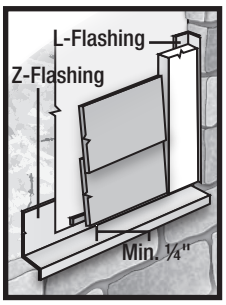

Figure 12
Drip Edge

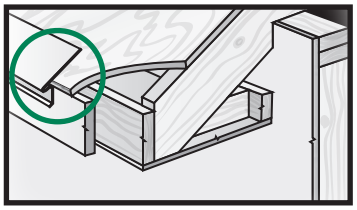

Figure 13
Block Penetration
(Recommended in HZ10)

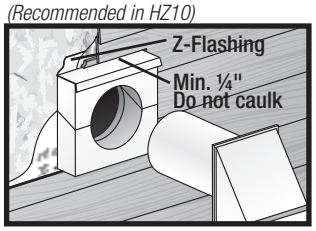

Figure 14
Valley/Shingle Extension

FASTENER REQUIREMENTS **

Blind Nailing is the preferred method of installation for HardiePlank® lap siding products. Face nailing should only be used where required by code for high wind areas and must not be used in conjunction with Blind nailing (Please see JH Tech bulletin 17 for exemption when doing a repair). **Pin-backed corners may be done for aesthetic purposes Only. Pin-backs shall be done with finish nails only, and are not a substitute for blind or face nailing.**

BLIND NAILING

Nails - Wood Framing
- Siding nail (0.09" shank x 0.221" HD x 2" long)
- 11ga. roofing nail (0.121" shank x 0.371" HD x 1.25" long)

Screws - Steel Framing
- Ribbed Wafer-head or equivalent (No. 8 x 1 1/4" long x 0.375" HD) Screws must penetrate 3 threads into metal framing.

Nails - Steel Framing
- ET & F Panelfast® nails or equivalent (0.10" shank x 0.313" HD x 1-1/2" long) Nails must penetrate minimum 1/4" into metal framing.

OSB minimum 7/16"
- 11ga. roofing nail (0.121" shank x 0.371" HD x 1.75" long)
- Ribbed Wafer-head or equivalent (No. 8 x 1 5/8" long x 0.375" HD).

FACE NAILING

Nails - Wood Framing
- 6d (0.113" shank x 0.267" HD x 2" long)
- Siding nail (0.09" shank x 0.221" HD x 2" long)

Screws - Steel Framing
- Ribbed Bugle-head or equivalent (No. 8-18 x 1-5/8" long x 0.323" HD) Screws must penetrate 3 threads into metal framing.

Nails - Steel Framing
- ET & F pin or equivalent (0.10" shank x 0.25" HD x 1-1/2" long) Nails must penetrate minimum 1/4" into metal framing.

OSB minimum 7/16"
- Siding nail (0.09" shank x 0.221" HD x 1-1/2" long)*

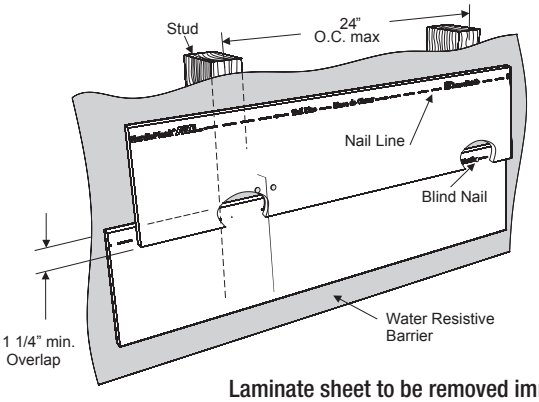

Figure 15

Minimum overlap
for Both Face
and Blind Nailing

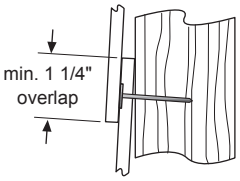

Figure 16

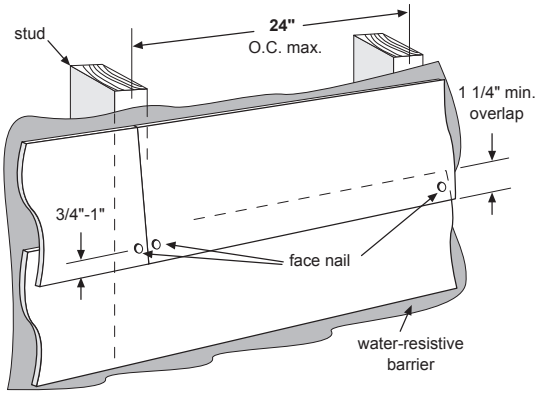

Laminate sheet to be removed immediately after installation of each course for ColorPlus® products.

* When face nailing to OSB, planks must be no greater than 9 1/4" wide and fasteners must be 12" o.c. or less.

** Also see General Fastening Requirements; and when considering alternative fastening options refer to James Hardie's Technical Bulletin USTB 17 - Fastening Tips for HardiePlank® Lap Siding.

GENERAL FASTENING REQUIREMENTS

Fasteners must be corrosion resistant, galvanized, or stainless steel. Electro-galvanized are acceptable but may exhibit premature corrosion. James Hardie recommends the use of quality, hot-dipped galvanized nails. James Hardie is not responsible for the corrosion resistance of fasteners. Stainless steel fasteners are recommended when installing James Hardie® products near the ocean, large bodies of water, or in very humid climates.

Manufacturers of ACQ and CA preservative-treated wood recommend spacer materials or other physical barriers to prevent direct contact of ACQ or CA preservative-treated wood and aluminum products. Fasteners used to attach HardieTrim Tabs to preservative-treated wood shall be of hot dipped zinc-coated galvanized steel or stainless steel and in accordance to 2009 IRC R317.3 or 2009 IBC 2304.9.5.

- Consult applicable product evaluation or listing for correct fasteners type and placement to achieve specified design wind loads.
- NOTE: Published wind loads may not be applicable to all areas where Local Building Codes have specific jurisdiction. Consult James Hardie Technical Services if you are unsure of applicable compliance documentation.
- Drive fasteners perpendicular to siding and framing.
- Fastener heads should fit snug against siding (no air space). (fig. A)
- Do not over-drive nail heads or drive nails at an angle.
- If nail is countersunk, fill nail hole and add a nail. (fig. B)
- For wood framing, under driven nails should be hit flush to the plank with a hammer (For steel framing, remove and replace nail).
- NOTE: Whenever a structural member is present, HardiePlank should be fastened with even spacing to the structural member. The tables allowing direct to OSB or plywood should only be used when traditional framing is not available.
- **Do not use aluminum fasteners, staples, or clipped head nails.**

PNEUMATIC FASTENING

James Hardie products can be hand nailed or fastened with a pneumatic tool. Pneumatic fastening is highly recommended. Set air pressure so that the fastener is driven snug with the surface of the siding. A flush mount attachment on the pneumatic tool is recommended. This will help control the depth the nail is driven. If setting the nail depth proves difficult, choose a setting that under drives the nail. (Drive under driven nails snug with a smooth faced hammer - Does not apply for installation to steel framing).

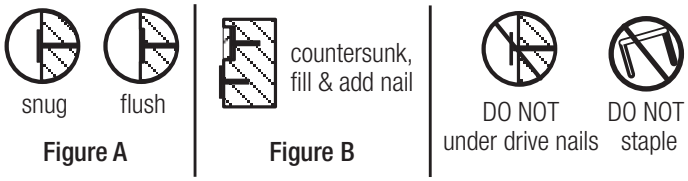

PAINTING

DO NOT use stain, oil/alkyd base paint, or powder coating on James Hardie® Products. James Hardie products must be painted within 180 days for primed product and 90 days for unprimed. 100% acrylic topcoats are recommended. Do not paint when wet. For application rates refer to paint manufacturers specifications. Back-rolling is recommended if the siding is sprayed.

CUT EDGE TREATMENT

Caulk, paint or prime all field cut edges. James Hardie touch-up kits are required to touch-up ColorPlus products.

CAULKING

For best results use an Elastomeric Joint Sealant complying with ASTM C920 Grade NS, Class 25 or higher or a Latex Joint Sealant complying with ASTM C834. Caulking/Sealant must be applied in accordance with the caulking/sealant manufacturer's written instructions. **Note: OSI Quad as well as some other caulking manufacturers do not allow tooling.**

COLORPLUS® TECHNOLOGY CAULKING, TOUCH-UP & LAMINATE

- Care should be taken when handling and cutting James Hardie® ColorPlus® products. During installation use a wet soft cloth or soft brush to gently wipe off any residue or construction dust left on the product, then rinse with a garden hose.
- Touch up nicks, scrapes and nail heads using the ColorPlus® Technology touch-up applicator. Touch-up should be used sparingly. If large areas require touch-up, replace the damaged area with new HardiePlank® lap siding with ColorPlus Technology.
- Laminate sheet must be removed immediately after installation of each course.
- Terminate non-factory cut edges into trim where possible, and caulk. Color matched caulks are available from your ColorPlus® product dealer.
- Treat all other non-factory cut edges using the ColorPlus Technology edge coaters, available from your ColorPlus product dealer.

Note: James Hardie does not warrant the usage of third party touch-up or paints used as touch-up on James Hardie ColorPlus products.

Problems with appearance or performance arising from use of third party touch-up paints or paints used as touch-up that are not James Hardie touch-up will not be covered under the James Hardie ColorPlus Limited Finish Warranty.

PAINTING JAMES HARDIE® SIDING AND TRIM PRODUCTS WITH COLORPLUS® TECHNOLOGY

When repainting ColorPlus products, James Hardie recommends the following regarding surface preparation and topcoat application:

- Ensure the surface is clean, dry, and free of any dust, dirt, or mildew
- Repriming is normally not necessary
- 100% acrylic topcoats are recommended
- DO NOT use stain, oil/alkyd base paint, or powder coating on James Hardie® Products.
- Apply finish coat in accordance with paint manufacturers written instructions regarding coverage, application methods, and application temperature
- DO NOT caulk nail heads when using ColorPlus products, refer to the ColorPlus touch-up section

COVERAGE CHART/ESTIMATING GUIDE

Number of 12' planks, does not include waste

COVERAGE AREA LESS OPENINGS	HARDIEPLANK® LAP SIDING WIDTH								
SQ (1 SQ = 100 sq.ft.)	(exposure)	5 1/4 4	6 1/4 5	7 1/4 6	7 1/2 6 1/4	8 6 3/4	8 1/4 7	9 1/4 8	9 1/2 8 1/4	12 10 3/4
1		25	20	17	16	15	14	13	13	9
2		50	40	33	32	30	29	25	25	19
3		75	60	50	48	44	43	38	38	28
4		100	80	67	64	59	57	50	50	37
5		125	100	83	80	74	71	63	63	47
6		150	120	100	96	89	86	75	75	56
7		175	140	117	112	104	100	88	88	65
8		200	160	133	128	119	114	100	100	74
9		225	180	150	144	133	129	113	113	84
10		250	200	167	160	148	143	125	125	93
11		275	220	183	176	163	157	138	138	102
12		300	240	200	192	178	171	150	150	112
13		325	260	217	208	193	186	163	163	121
14		350	280	233	224	207	200	175	175	130
15		375	300	250	240	222	214	188	188	140
16		400	320	267	256	237	229	200	200	149
17		425	340	283	272	252	243	213	213	158
18		450	360	300	288	267	257	225	225	167
19		475	380	317	304	281	271	238	238	177
20		500	400	333	320	296	286	250	250	186

This coverage chart is meant as a guide. Actual usage is subject to variables such as building design. James Hardie does not assume responsibility for over or under ordering of product.

RECOGNITION: In accordance with ICC-ES Evaluation Report ESR-2290, HardiePlank® lap siding is recognized as a suitable alternate to that specified in: the 2006,2009,&2012 International Residential Code for One- and Two-Family Dwellings, and the 2006, 2009, & 2012 International Building Code,. HardiePlank lap siding is also recognized for application in the following: City of Los Angeles Research Report No. 24862, State of Florida listing FL#889, Dade County, Florida NOA No. 02-0729.02, U.S. Dept. of HUD Materials Release 1263c, Texas Department of Insurance Product Evaluation EC-23, City of New York MEA 223-93-M, and California DSA PA-019. These documents should also be consulted for additional information concerning the suitability of this product for specific applications.

© 2013 James Hardie Building Products. All rights reserved.
TM, SM, and ® denote trademarks or registered trademarks of James Hardie Technology Limited. is a registered trademark of James Hardie Technology Limited.

Panelfast is a registered trademark of ET&F Fastening Systems, Inc.

Additional Installation Information, Warranties, and Warnings are available at www.jameshardie.com

JamesHardie®

2015 Tear Down Plan

Phase One

- Remove and salvage
  - Remove Frost Proof Sill Cock
  - Other – as communicated
  - Carry plumbing fixtures to designated location for

    Plumbing

  SAVE all parts and place in containers provided by us

- Remove Light Fixtures and Re-Box
- Remove Breaker Panel with Breakers
- Other – as communicated

  Electrical

  SAVE all parts and place in containers provided by us

- The brick will be scoped up by skid loader (two 20yd dumpsters for brick only).
- Remove trim and siding from around the window only
- Take the siding and trim pieces you removed to the debris pile
- Carefully remove the window
  - Carry window to designated location for ***Window***

Phase Two

- Remove copper pipes and wire from walls and take to *Copper Recycle* area.
- Remove the *PVC* from the walls and put in a Gray-Mate.
- Remove the steel studs and track, **take the studs and track apart**, then to the *Steel Recycle* dumpster.
- Remove both walls with wood studs, take them to the *Wood Wall* area and stack for banding.
- Remove any screws holding pipe to the slab sections
- Remove any Simpson connectors from the slab sections.
- Take the Orange slab section to the *Orange Slab* area and stack for banding.
- Take the Blue slab section to the *Blue Slab* area and stack for banding.

Phase Three

- Teams that have completed previous tasks can remove the felt paper and tape from the concrete and discard in trash receptacle.
- Sweep up all debris and place in trash bins
- Help other teams as needed
- Skid loader will pick up the debris.
- Take tools to the tool area
- Wait quietly for further directions

.

Teams that have completed this segment should help any other teams.

Demolition is complete, wait for FINAL instructions.

CHANGE ORDER FORM

Date: _____

Deletion:

Addition:

Comments:

Signature_____

In the upcoming days of the competition you will receive all the hand and power tools you will need to complete your project. You are responsible for those tools and should treat them with the same care you would afford borrowed from a good friend tools.

You should inventory the tools to ensure all the items on your Tool Checklist are there. If there are missing items, you must inform a Technical Committee member immediately.

Once you have all your tools it is your responsibility to charge all your batteries so the tools are ready to be used the next morning.

Friday, your tools will be checked as you return them. Failure to return a tool or returning a tool in a poor condition may impact your score.

If at any point during the competition you have a problem with a hand or power tool, please talk with a Technical Committee member so your problem can be addressed.

Remember, job site safety includes tool safety. Use your tools only for their intended use so you do not hurt yourself, others around you or damage the tool. Always use your eye protection and maintain a clean work area.

Best of luck in the competition

TeamWork's Technical Committee

SkillsUSA
2015 Contest Projects

Technical Drafting

Click the “Print this Section” button above to automatically print the specifications for this contest. Make sure your printer is turned on before pressing the button.

2014 TECHNICAL DRAFTING PROJECT

The following is excerpted from the Contest Descriptions on the SkillsUSA website: "*This contest evaluates contestant's preparation for employment and recognizes outstanding students for excellence and professionalism in the field of technical drafting. The contest will focus on the solution of industry-developed problems by applying appropriate technical drafting skills and tools including computer-aided drafting (CAD).*"

The project this year is a Toy Car Launcher shown on this page (drawing the vehicle is optional). The view on the left shows the Car Launcher cocked with the car in position ready to be launched by pushing the "PUSH ME" Button (2). The up-side-down view on the right shows the clear Bottom Cover (5) to provide an un-cocked internal view. The mechanism is effective at propelling a toy car about three feet on a smooth flat surface.

When the Car Launcher (4) is cocked, the Long Spring (7) is compressed. As the inclined surface on the Car Launcher engages the Button Lock (3), the Short Spring (8) is compressed. The Button Lock holds the Car Launcher in position until released by pressing the Button (2).

Project prepared by: Patrick McCuistion, Ohio University

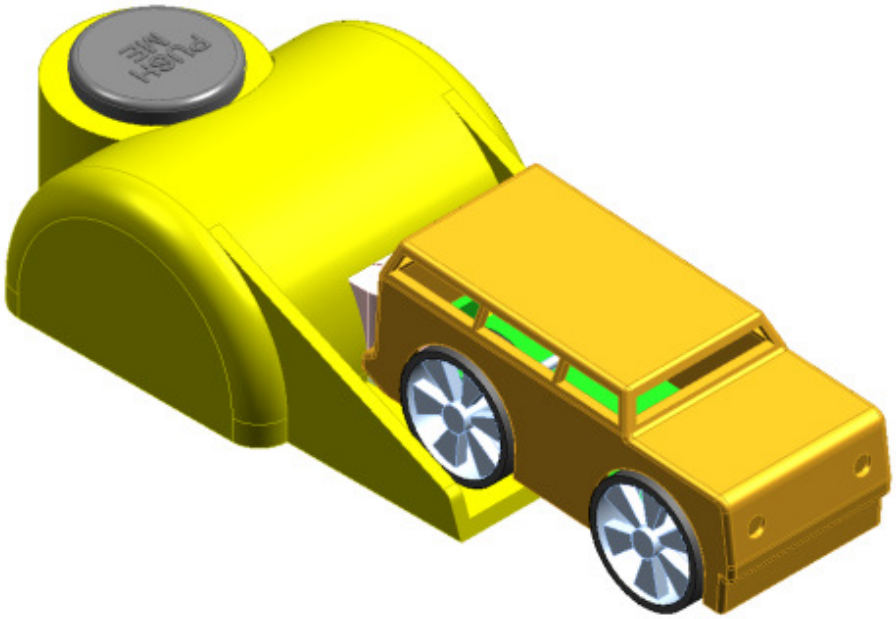

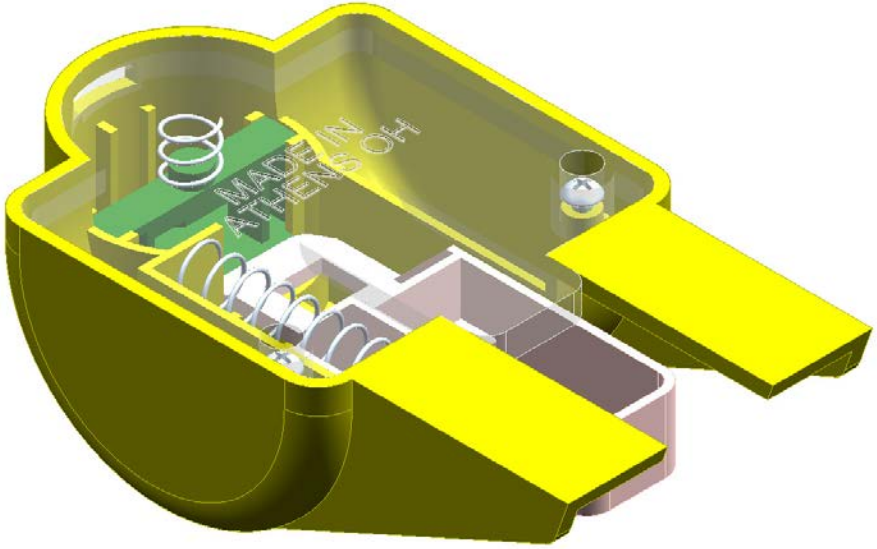

TOY CAR LAUNCHER

The drawings on page 3 show a sectioned assembly, an exploded assembly and a parts list. The drawings on pages 4-9 show 2D and 3D views of the assembled parts. The instructions are to draw the following:

3D geometry for all the parts,
fully dimensioned detail drawings of the parts listed in the parts lists except the screw and springs,
FINAL exploded isometric assembly drawing including item balloons and parts lists.

All drawings must be on proper drawing formats and include completed title blocks.

Draw the parts in this order:

1 - Button (2)
2 - Bottom Cover (5)
3 - Button Lock (3)
4 - Car Launcher (4)
5 - Launch Base (1)
6 - Screw (6)
7 - Springs (7) & (8)
8 - Assembly

Except for the Screws and Springs all the parts are made with high impact polystyrene plastic.

PART SPECIFICATIONS

All dimensions are in inches.

SCREW, SELF-TAPPING (6)

#3(.099) – 28 X .18, Type B, Type 1A Cross Recessed Pan Head, .0005 thick chrome plate

SPRING, SHORT (8)

Material	-	UNS G10660
Wire diameter	-	.02
Inside diameter	-	.20
Free length	-	.32
No. of coils	-	3
End treatment	-	Closed

SPRING, LONG (7)

Material	-	UNS G10660
Wire diameter	-	.02
Outside diameter	-	.28
Free length	-	1.00
No. of coils	-	7
End treatment	-	Closed

FINAL ASSEMBLY

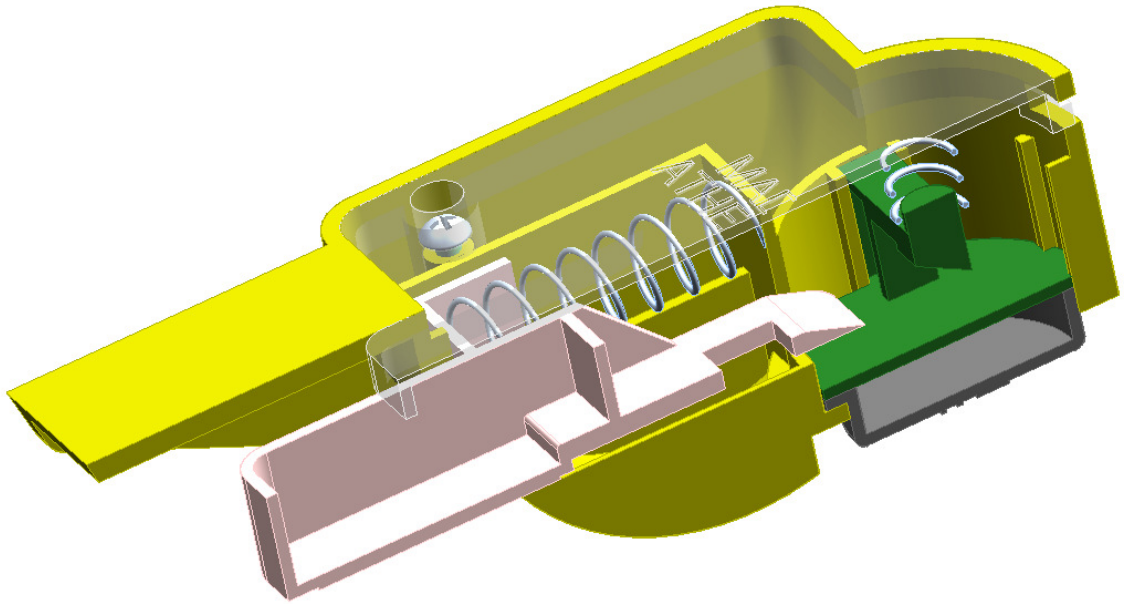

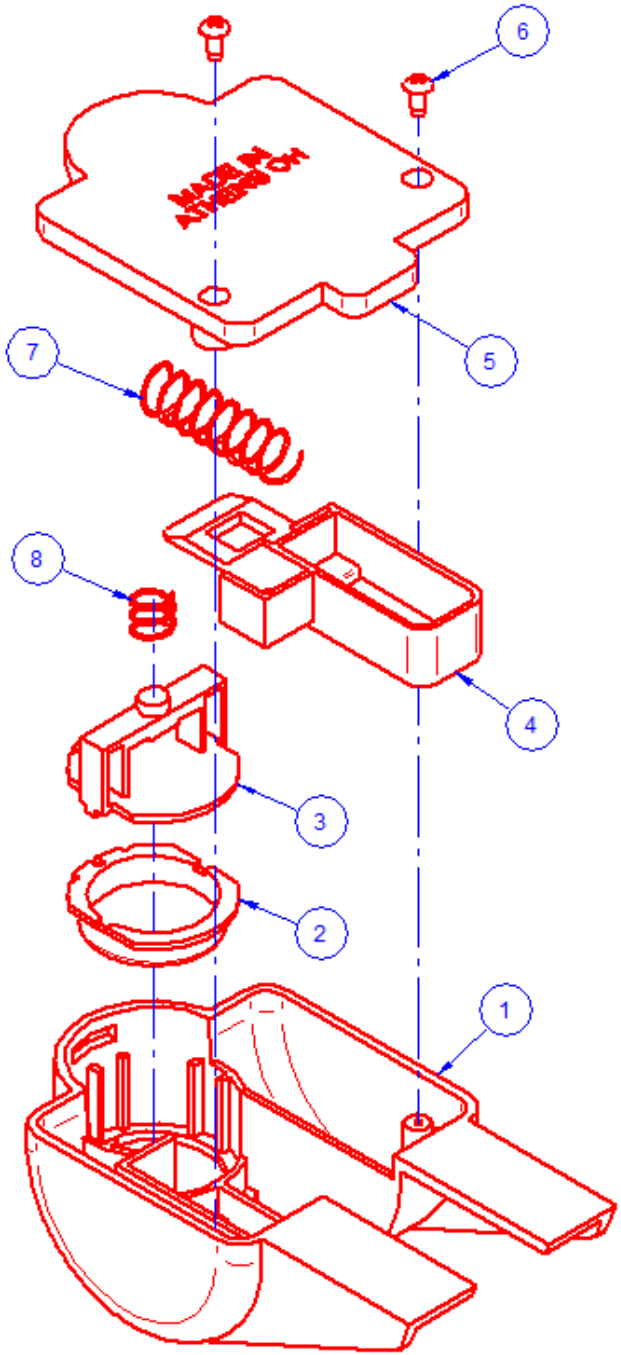

ITEM	NUMBER	NAME	QTY
8	7901XX07	SPRING, SHORT	1
7	7901XX06	SPRING, LONG	1
6	FSST2-32	SCREW	2
5	7901XX05	COVER, BOTTOM	1
4	7901XX04	LAUNCHER, CAR	1
3	7901XX01	LOCK, BUTTON	1
2	7901XX02	BUTTON	1
1	7901XX003	BASE, LAUNCH	1

PARTS LIST

BUTTON (2)

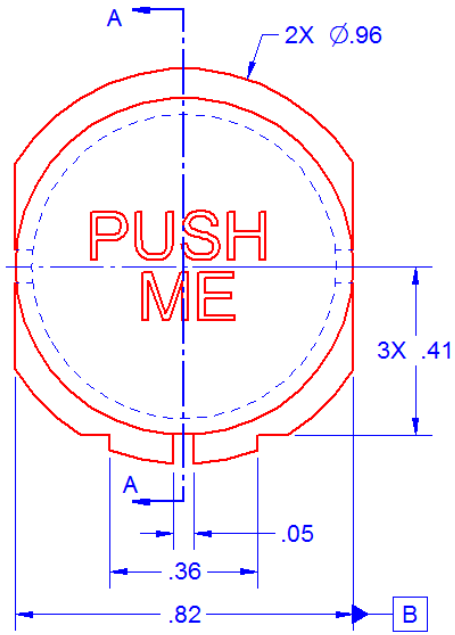

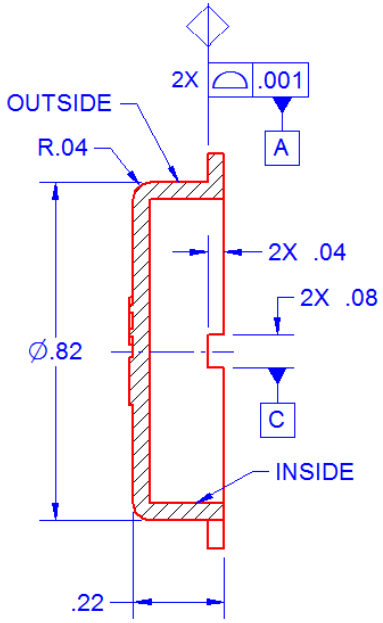

SECTION A-A

NOTES:
1 - UOS ALL WALL THK .04
2 - MAX FLASH .002
3 - .5°-1° DRAFT OUTSIDE
4 - 0° MAX DRAFT INSIDE
5 - LETTERS .10 TALL .01
RAISED LOCATED AS SHOWN
6 - SURFACE FINISH SPI A-1
7 - ALL DIM BASIC
8 - UOS ALL SURF

⌓	.003Ⓤ0	A	B	C

BOTTOM COVER (5)

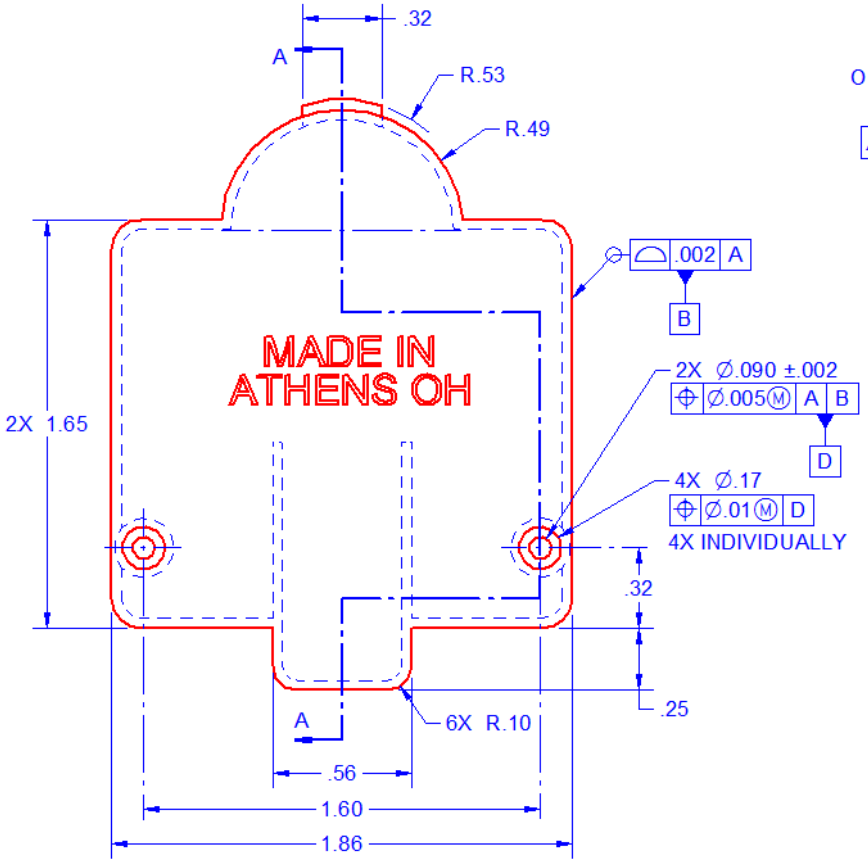

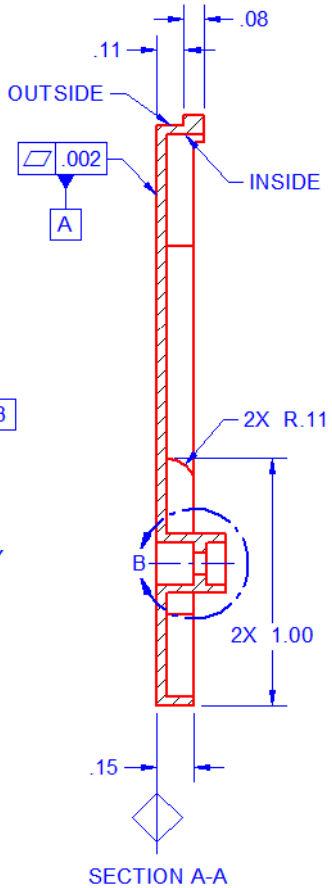

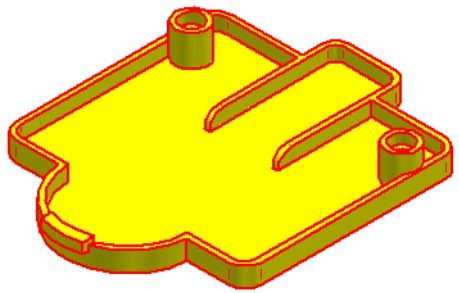

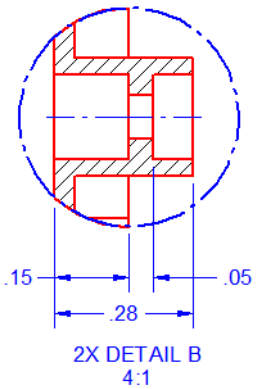

NOTES:
1 - UOS ALL WALL THK .04
2 - MAX FLASH .002
3 - .5°-1° DRAFT OUTSIDE
4 - 0° MAX DRAFT INSIDE
5 - LETTERS .12 TALL .01 RECESSED AND LOCATED AS SHOWN
6 - SURFACE FINISH SPI A-1
7 - UOS ALL DIM BASIC
8 - UOS ALL SURF
.003Ⓤ0 A B

BUTTON LOCK (3)

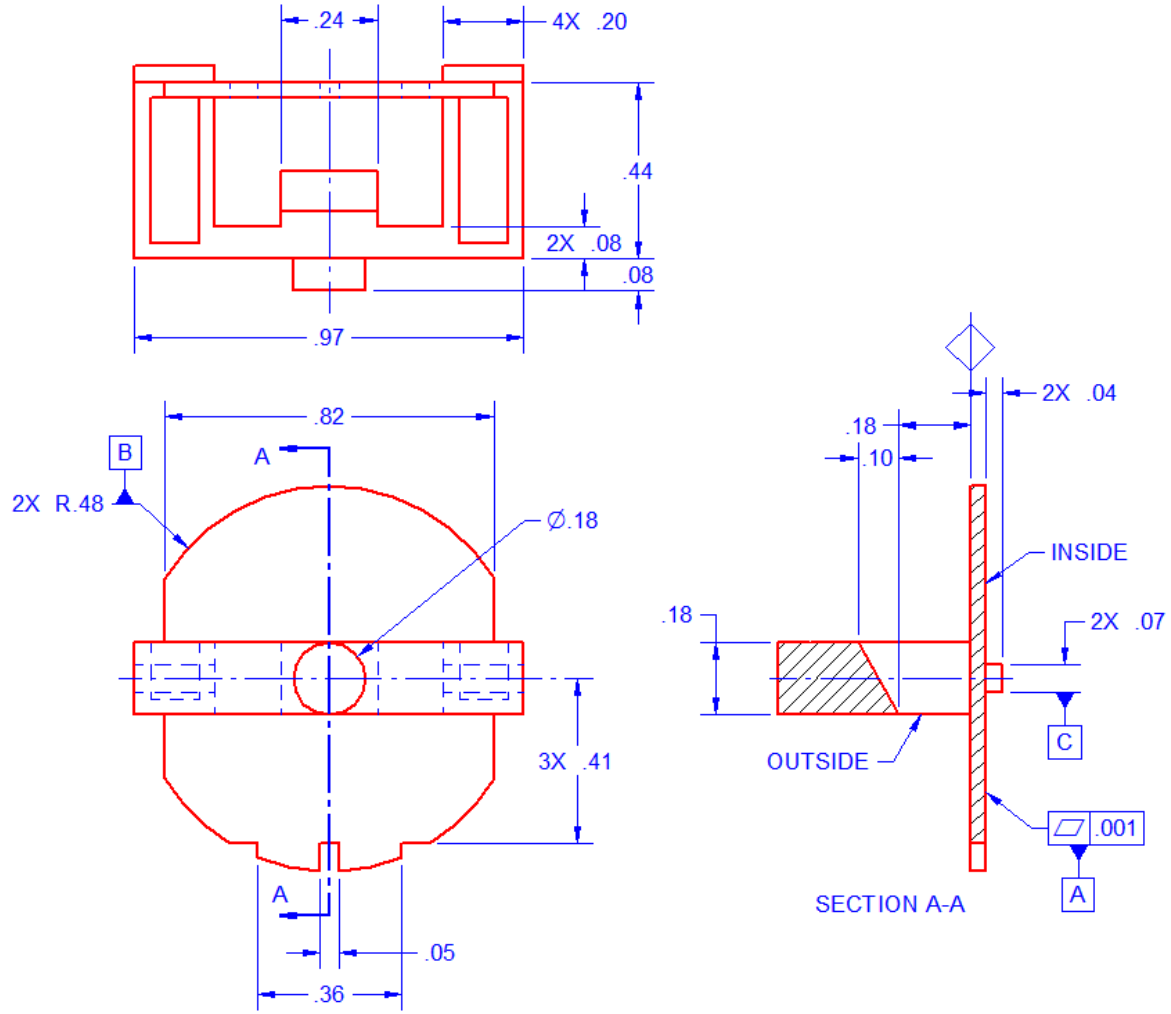

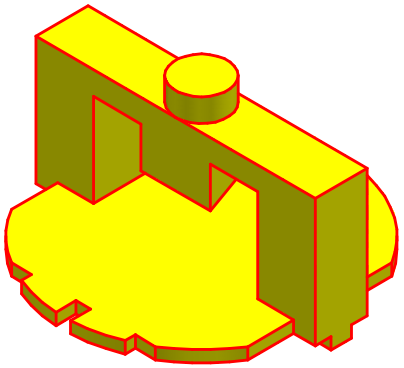

NOTES:
1 - UOS ALL WALL THK .04
2 - MAX FLASH .002
3 - 1° MAX DRAFT INSIDE
4 - .5° MAX DRAFT OUTSIDE
5 - MAX DIE MISMATCH .005
6 - SURFACE FINISH SPI A-1
6 - UOS ALL DIM BASIC
7 - UOS ALL SURF

⌓	.003 Ⓤ 0	A	B	C

CAR LAUNCHER (4)

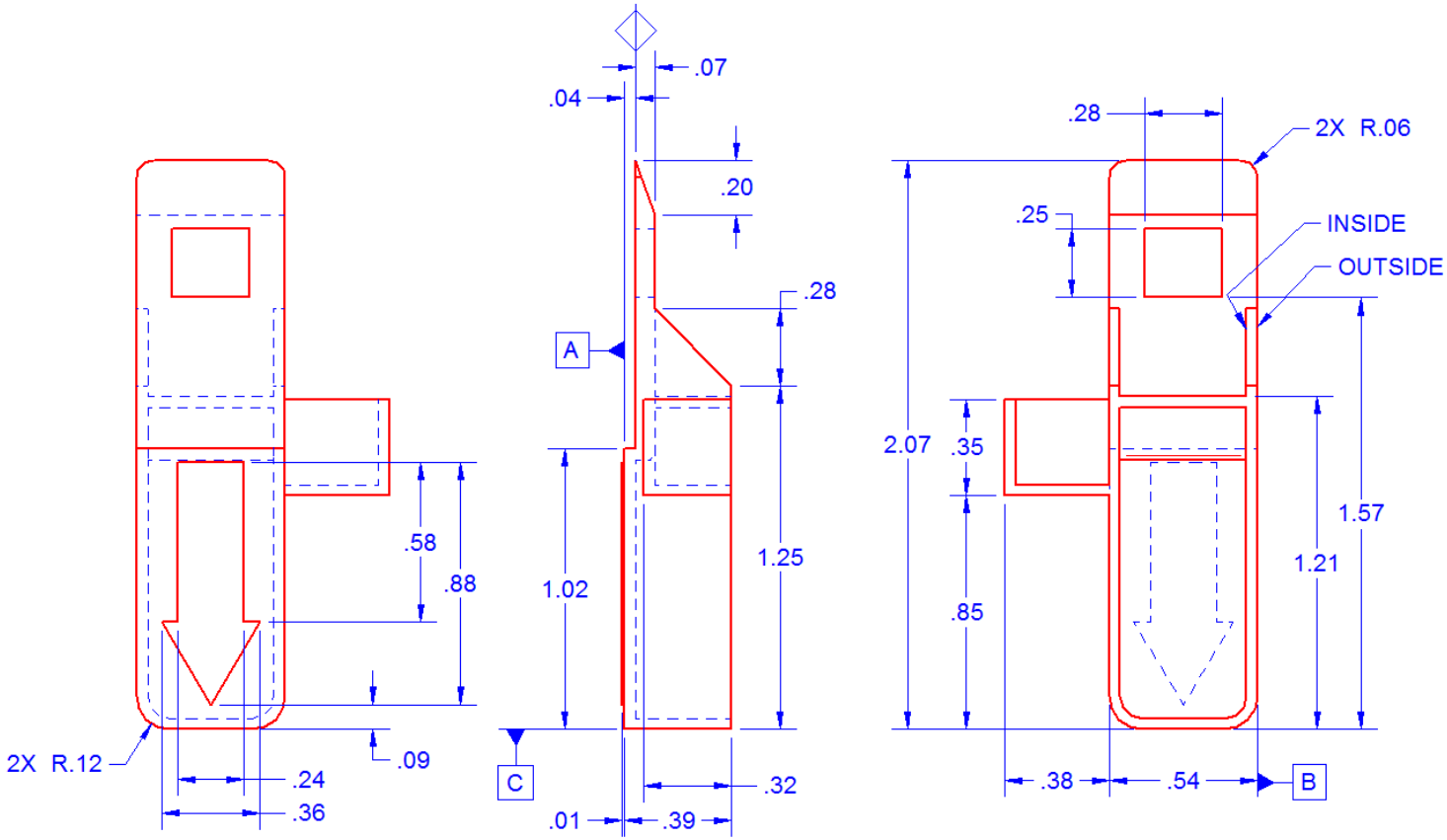

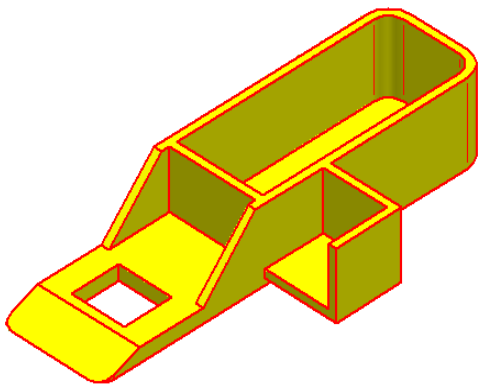

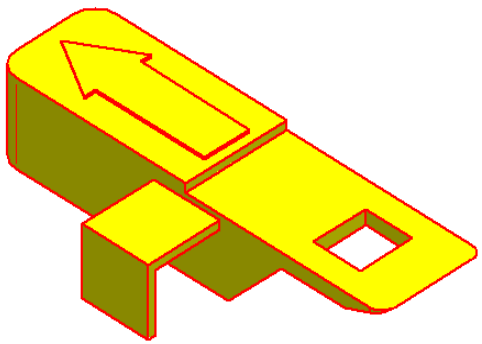

NOTES:
1 - UOS ALL WALL THK .04
2 - MAX FLASH .002
3 - .5°-1° DRAFT OUTSIDE
4 - 0° DRAFT INSIDE
5 - LETTERS .10 TALL .01
RAISED LOCATED AS SHOWN
6 - SURFACE FINISH SPI A-1
7 - ALL DIM BASIC
8 - ALL SURF

⌓	.003Ⓤ0	A	B	C

LAUNCH BASE (1)

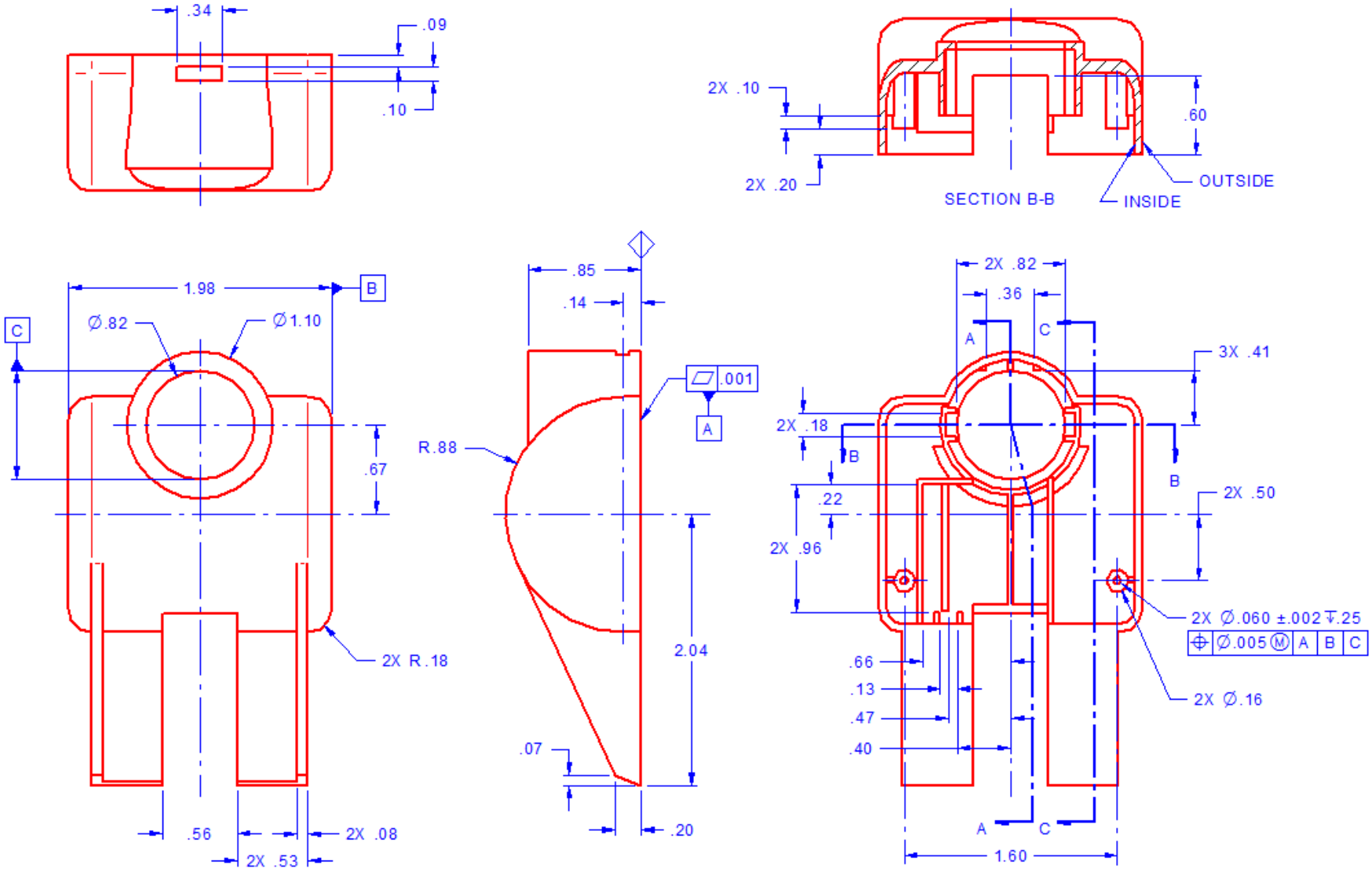

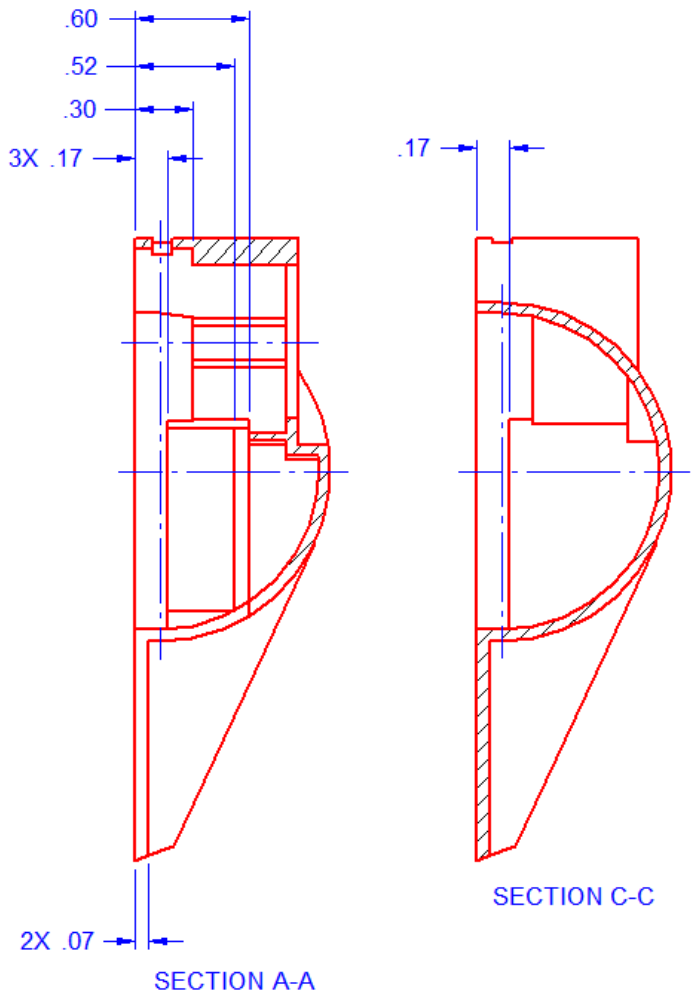

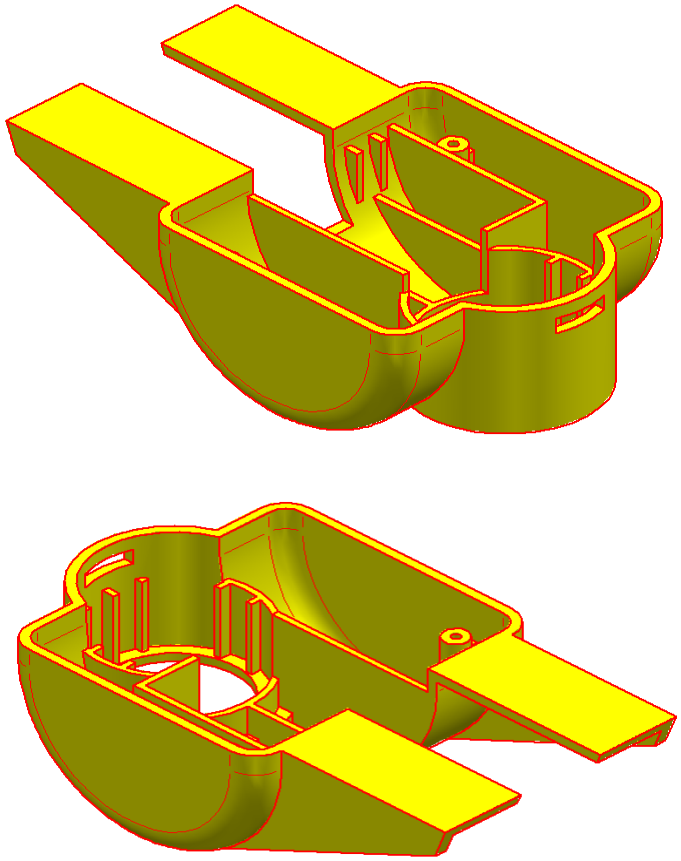

NOTES:
1 - UOS ALL WALL THK .04
2 - MAX FLASH .002
3 - .5°-1° DRAFT OUTSIDE
4 - 0° DRAFT INSIDE
5 - SURFACE FINISH SPI A-1
5 - UOS ALL DIM BASIC
6 - UOS ALL SURF

⌓	.003 Ⓤ 0	A	B	C

SkillsUSA
2015 Contest Projects

Telecommunications Cabling

Click the “Print this Section” button above to automatically print the specifications for this contest. Make sure your printer is turned on before pressing the button.

Score Sheet

2015 Cable Installing

Total possible points on this portion of the contest: 200

Contestant Number _____ **Judges Signature _____**

Directions:

1. You will have a total of 45 minutes to complete the Cable Installing exercise.
2. Secure the area.
3. Install two (2) Cat 6 cables from the work area outlet to the equipment rack modular patch panel.
4. Terminate to T568B on positions 1 & 2 of modular patch panel 1.
5. Label per TIA-EIA 606 Labeling Standards identifying cable #1 and #2.

Step	Possible Points	Description	Criteria	Judges Comments	Score	Test Pass/Fail
1	5	Secure the work area.	5 pts or zero pts			
2	10	Setup pull boxes & label cables and boxes.	No label - 5			
3	10	Pull cables and dress across ladder rack.	2 pts for pulling cable. Bend radius 2 pts Pulling tension 2 pts Technique 2 pts Secure cables 2 pts			
4	10	Fish conduit & install pull string.	10 pts or zero pts			
5	15	Pull cables through conduit with pull string.	5 pts for string 10 pts for cables			
6	10	Terminate cables per T568-B standard on modular panel 1, positions 1&2 and the wall outlet jacks.	10 pts			
7	10	Install faceplate. (If this is not done the cable will not be tested resulting in the loss of all points in Step 10.)	Labels 2 pts each (2) Face plate 2 pts (1) Jack 2 pts each (2)			
8	5	Dress & secure cables.	Judges discretion			
9	10	Clean up work area.	Judges discretion			
10	15	Judge tests both cables. Neither cable works = 0 points One cable works = 5 points Both cables work = 10 points Extra points awarded to top 5 cable readings with 2 good cables.	Test Result Ranking			Test Results
	100			Point Subtotal		
				Multiplier x 2		
				Total Points		

Step 10 Test Results Ranking

1st 15 points
2nd 14 points
3rd 13 points
4th 12 points
5th 11 points

Test Result: _____

Place: _____

Points Awarded _____

Professionalism: Okay _____ Deduction _____ (Up to 5 points)

Safety: Okay _____ Deduction _____ (Up to 5 points)

Score Sheet

2015 Cable Termination: Twenty-five Pair on 110 Block

Total possible points on this portion of the contest: 150

Contestant Number _____ **Judges Signature** _____

Directions:

1. You will have a total of 30 minutes to complete the Cable Termination exercise.
2. Determine the amount of cable remaining in the cable box in feet.
   Number of feet of cable = _____
3. Terminate a 25 pair cable on Row two (2) of the110 block labeled 102. (Route the 25 pair cable from the top down and dress cable in from the right side.)
4. Run a Cat 6, 4 pair cable from Row two (2) beginning with Pair 5 on the 110 block labeled 101 to the wall outlet.
5. Use a C4 clip on 110 block 101 and a C5 clip on 110 block 102 to cross connect pair 1 of the 4 pair cable to pair 10 of the 25 pair cable.

Step	Possible Points	Description	Judges Comments	Score	Test Pass/Fail
1	10	Determining remaining cable in box			
2	20	Proper color code of twenty-five pair			
3	20	Proper termination of 110 block			
4	10	Dress cable			
5	10	Proper cross-connect routing			
6	10	Proper installation of C5 & C4 clips			
7	10	Proper amount of slack at work area			
8	10	Clean up			
	100		Point Subtotal		
			Multiplier x 1.5		
			Point Total		

Professionalism: Okay _____ Deduction _____ (Up to 5 points)
Safety: Okay _____ Deduction _____ (Up to 5 points)

Score Sheet

2015 Copper Cable Construction
Total possible points on this portion of the contest: 150

Contestant Number _____ **Judge's Signature** _____

Directions:
1. You will have 90 minutes to construct 6 cables.
2. Make one 568A patch cable, two 568B patch cables, one basic link 568B cable with female jacks, a crossover cable, and a coax cable.
3. Each cable should be at least 36 inches long when complete. (Cut 3.5 feet)
4. Label each cable with your contestant number and type cable
   Patch – 568A 2-Patch 568B Basic Link – B Crossover – X Coax – C
5. Connect the two 568B patch cables to the basic link cable to make a complete channel.
6. When finished present your cables to the judge for testing.

T568A Patch Cable	Points	End 1	End 2	Subtotal	
Cable is properly labeled	3 Total				
Insulation crimped	2 each end				
Pairs fully inserted	2 each end				
Nylon reinforcement cord trimmed	2 each end				Cable Total
Wire map passed T568A	15				

T568B Patch Cable	Points	End 1	End 2	Subtotal	
Cable is properly labeled	3 Total				
Insulation crimped	2 each end				
Pairs fully inserted	2 each end				
Nylon reinforcement cord trimmed	2 each end				Cable Total
Wire map passed T568B	15				

T568B Patch Cable	Points	End 1	End 2	Subtotal	
Cable is properly labeled	3 Total				
Insulation crimped	2 each end				
Pairs fully inserted	2 each end				
Nylon reinforcement cord trimmed	2 each end				Cable Total
Wire map passed T568B	15				

T568B Basic Link	Points	End 1	End 2	Subtotal	
Cable is properly labeled	3 Total				
Insulation flush terminated	2 each end				
Pairs fully inserted	2 each end				
Nylon reinforcement cord trimmed	2 each end				Cable Total
Wire map passed T568B	15				

Crossover Cable	Points	End 1	End 2	Subtotal	
Cable is properly labeled	3 total				
Insulation crimped	2 each end				
Pairs fully inserted	2 each end				
Nylon reinforcement cord trimmed	2 each end				Cable Total
Wire map passed	15				

2015 Copper Cable Construction

Contestant Number _____

Terminate Coax with F Connectors		End 1	End 2	Subtotal	
Cable is properly labeled	3 total				
Insulation crimped	2 each end				
Conductor proper length	2 each end				
Outer shield trimmed properly	2 each end				Cable Total
Test cable (VOM)	15				

Penalties	Number of additional plugs used	Points
Deduct 10 points for each additional plug.		
Deduct 10 points for contestant not wearing eye protection.		
	Total Deduction	

Gross Copper Cable Points (180 points max) _____

Subtract Penalty Points _____

Add 10 bonus points if the Channel Test works _____

Add 10 points if the other three cables all work _____

Net Copper Cable Construction Points _____

Total Copper Cable Construction Points = .75 x Net Points _____

Professionalism: Okay _____ Deduction _____ (Up to 5 points)
Safety: Okay _____ Deduction _____ (Up to 5 points)

Score Sheet

2015 Copper Cable Troubleshooting

Total possible points on this portion of the contest: 100

Contestant Number _____ **Judges Signature** _____

Directions:

1. You will have 40 minutes to complete cable troubleshooting.
2. Read the question and inspect the item at each station.
3. Put the answer to each station question on this answer sheet.
4. If an explanation is required, write it on this answer sheet. (If additional space is needed write it on the back and number it.)

Station	Answer	Explanation	Judges Comments	Score
1				
2				
3				
4				
5				
6				
7				
8				
9				
10				
11				
12				
13				
14				
15				
16				
17				
18				
19				
20				
21				
22				
23				
24				
25				
			Total	

Professionalism: Okay _____ Deduction _____ (Up to 5 points)

Safety: Okay _____ Deduction _____ (Up to 5 points)

Score Sheet

2015 Fiber Cable Troubleshooting
Total possible points on this portion of the contest: 50

Contestant Number _____ **Judges Signature** _____

Directions:

1. You will have 40 minutes to complete cable troubleshooting.
2. Read the question and inspect the item at each station.
3. Put the answer to each station question on this answer sheet.
4. If an explanation is required, write it on this answer sheet. (If additional space is needed write it on the back and number it.)
5. 2.5 points for each item

STATION	ANSWER	Explanation	Judges Comments	Score
1				
2				
3				
4				
5				
6				
7				
8				
9				
10				
11				
12				
13				
14				
15				
16				
17				
18				
19				
20				
			Total	

Professionalism: Okay _____ Deduction _____ (Up to 5 points)
Safety: Okay _____ Deduction _____ (Up to 5 points)

Score Sheet

2015 Telecommunications Cabling – Professionalism

Total possible points on this portion of the contest: 50

Contestant Number _____ **Judges Signature _____**

Item Evaluated	Possible Points	Score
Orientation (Attendance & Promptness)	5	
Competition Day Promptness	5	
Safety	5	
Attitude	5	
Tools and Equipment	30	
Total Score	50	

Score Sheet

2015 Technical Support

Total possible points on this portion of the contest: 100.

Contestant Number _____ **Judges Signature _____**

Directions:

In the Technical Support part of the contest, you will be judged on speaking skills, using a walkie-talkie or IP phone, and solving a customer problem while experiencing simulated stress and distractions.

Scenario:

You've just moved to testing an Ethernet data link that has been reported inoperative. The customer didn't give you much information just the room and ports that are having a problem. The employee at the station is complaining they can't retrieve files from the network.

You are working with your coworker Jake who is in the telecommunications closet providing support on the remote end. When you pick up the walkie-talkie or IP phone to begin working with Jake you will be operating a half-duplex communications tool **and need to ask Jake if he is there**.

Time Limit: 8 Minutes

Legend: O = Outstanding (10 pts.) E = Excellent (7 pts.) S = Satisfactory (5pts.) US = Unsatisfactory (0 pts)

Steps	Possible Points	Description	Judge's Comments	O	E	S	US	Score
A.		**Competitor Skills And Ability**						
1.	10	Demonstrates appropriate knowledge of network infrastructure, troubleshooting technique/skill, through logical decision and critical thinking (Visual, rationale, etc.).						
2.	10	Clearly identified problem.						
3.	10	Used equipment appropriately.						
4.	10	Managed time effectively/completed tasks on time.						
B.		**Performance Presentation**						
1.	10	Immediately involved co-worker in work process (no isolation).						
2.	10	Provided *continual* feed back to co-worker during performance/testing						
3.	10	Demonstrated safety principles during performance/testing under stress.						
4.	10	Demonstrated control of emotions when confronted with stress.						
5.	10	Displayed natural mannerisms when confronted with stress.						
6.	10	Demonstrated poise and positive communications with co-worker.						
	100	Total Possible Points		Total Points				

Judge's Comments

Professionalism: Okay _____ Deduction _____ (Up to 5 points)

Safety: Okay _____ Deduction _____ (Up to 5 points)

SkillsUSA
2015 Contest Projects

Television (Video) Production

Click the “Print this Section” button above to automatically print the specifications for this contest. Make sure your printer is turned on before pressing the button.

Association for Career and Technical Education

ACTE

Digital Video Production

National Leadership and Skills Conference - SkillsUSA 2015
Video Production: Public Service Announcement

Prompt: "Career and Technical Education addresses the need for Science, Technical, Engineering and Mathematics (STEM) education. What is STEM and how is STEM a critical component of career and technical education and necessary for modern workers?"

There has been an enormous amount of attention given to STEM, Science, Technology, Engineering and Mathematics, education over the past several years. Yet this attention has been mostly limited to those careers requiring advanced degrees. In the 21st century economy, many jobs now require some STEM skills, and the vast majority of careers that are fueled by career and technical education (CTE) are frequently, STEM jobs.

Therefore the general public needs to understand that STEM is CTE (not the other way around....in that CTE is the embodiment of how to use STEM knowledge in an applied, important way). Being able to show the diversity of careers that a career and technical education lead to and exemplifying them as STEM is an important next step in building America's awareness of the value and role of this pathway for all learners.

Please see the following for more information:

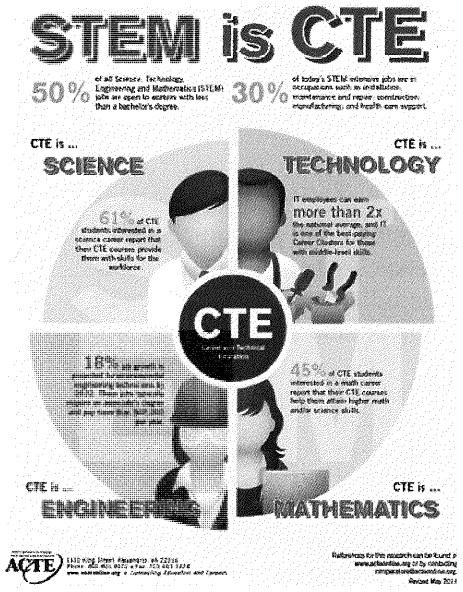

http://tinyurl.com/ncvut3e

http://tinyurl.com/qbs5plq

STEM is CTE

50% of all Science, Technology, Engineering and Mathematics (STEM) jobs are open to workers with less than a bachelor's degree.

30% of today's STEM intensive jobs are in occupations such as installation, maintenance and repair; construction; manufacturing; and health care support.

CTE is ... SCIENCE

61% of CTE students interested in a science career report that their CTE courses provide them with skills for the workforce.

CTE is ... TECHNOLOGY

IT employees can earn **more than 2x** the national average, and IT is one of the best-paying Career Clusters for those with middle-level skills.

CTE
Career and Technical Education

CTE is ... ENGINEERING

18% job growth is projected for environmental engineering technicians by 2022. These jobs typically require an associate's degree and pay more than $45,000 per year.

CTE is ... MATHEMATICS

45% of CTE students interested in a math career report that their CTE courses help them attain higher math and/or science skills.

Association for Career and Technical Education
ACTE
1410 King Street, Alexandria, VA 22314
Phone: 800-826-9972 • Fax: 703-683-7424
www.acteonline.org • *Connecting Education and Careers*

References for this research can be found at **www.acteonline.org** or by contacting cimperatore@acteonline.org.

Revised May 2014

Association for Career and Technical Education
ACTE

ISSUE BRIEF

JUNE 2009

CTE's Role in Science, Technology, Engineering & Math

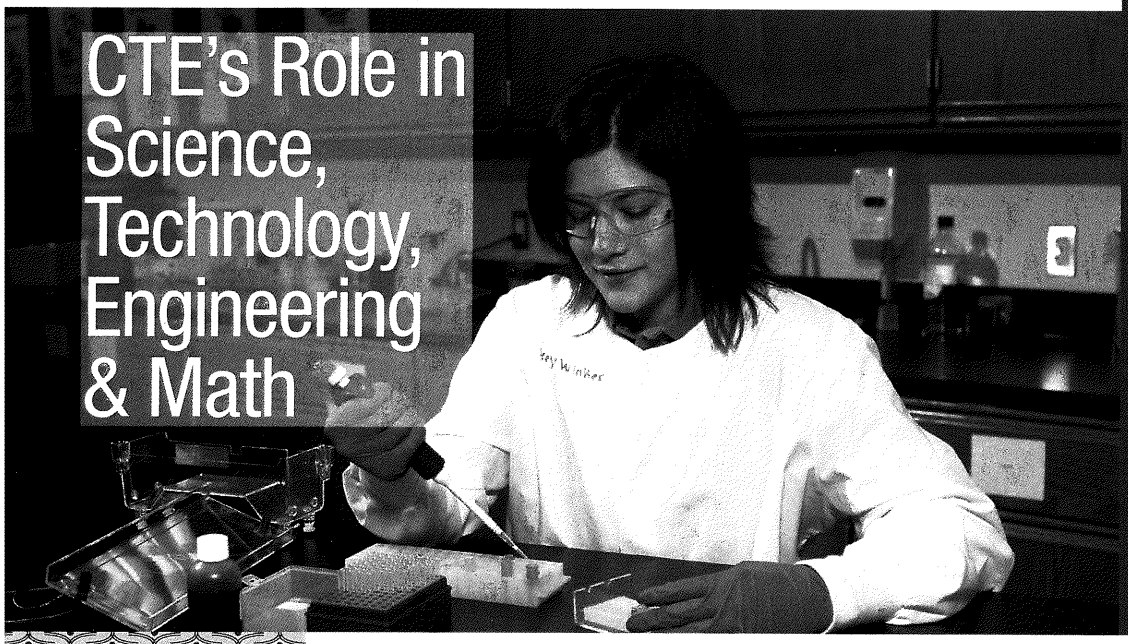

IN THIS BRIEF:
This Issue Brief will explore the integral role CTE programs and initiatives play in addressing the STEM challenge and securing America's leadership in innovation. CTE programs offer students a deeper understanding of STEM career pathways, build interest in STEM-related careers by making math and science content more relevant and tangible to students, and help grow the STEM workforce pipeline by encouraging more students from underrepresented populations to enter these career fields.

For the last several years, concern has been growing about America's underinvestment and underperformance in the fields collectively known as STEM (science, technology, engineering and mathematics). These concerns have been heralded in several high-profile books, reports and policy proposals from groups ranging from U.S. business leaders to the National Governors Association.[1]

What is STEM, and why is it drawing so much high-profile attention? STEM can be described as an "initiative for securing America's leadership in science, technology, engineering and mathematics fields and identifying promising strategies for strengthening the educational pipeline that leads to STEM careers."[2] The elements of science, technology, engineering and math are integral parts of our nation's critical economic sectors, from health care to energy, and infrastructure to national security. STEM careers include not only those requiring a research-based advanced math or science degree, but a broad range of related occupations in areas as diverse as aquaculture, automotive technology, accounting and architecture. More careers than ever before require a deep understanding of science, technology, engineering or math principles.

Despite the increased importance and focus placed on preparing students for STEM fields, more must be done to ensure a fully developed, skilled STEM workforce that will help secure America's economic future. Career and technical education (CTE) programs offer an important instructional approach that strengthens students' understanding of STEM content and helps attract more individuals into STEM career pathways. Expanding and strengthening CTE programs are critical parts of the solution to the STEM challenge.

The Concerns

TOO FEW STEM PROFESSIONALS

To regain a high level of American economic competitiveness and well-being, American-based industries need to perpetuate a steady stream of innovative

STEM-intensive Career Clusters and Sample Careers

Agriculture, Food and Natural Resources	Health Science	Information Technology	Manufacturing	Science, Technology, Engineering and Mathematics	Transportation, Distribution and Logistics
• Veterinarian • GPS Technician • Food and Drug Inspector	• Dietician • Pharmacy Technician • Microbiologist	• 3-D Animator • Network Administrator • Computer Programmer	• Electrical Engineer • Safety Technician • Wind Turbine Machinist	• Statistician • Lab Technician • Drafter	• Aerospace Engineer • Logistics Analyst • Diesel Engine Specialist

technologies and processes. Policymakers and business leaders have emphasized that this ability to innovate is predicated on the readiness of a large pool of talented individuals with expertise in the principles of science, technology, engineering and advanced mathematics. The demand for U.S. STEM professionals is expanding rapidly, but the supply of STEM talent is not increasing to meet the growing need.

Two main factors are affecting the supply side of the STEM equation. First, the looming retirement of the baby boom generation will significantly affect the STEM labor force. The number of current scientists and engineers retiring will increase rapidly over the next decade. Twenty-six percent of people with science and engineering degrees currently working are 50 years or older. Second, too few students are currently choosing to prepare for STEM careers. From 1985 to 2005, the number of bachelor's degrees earned in engineering fell from to 77,572 to 66,133, and the number of associate degrees in engineering technology fell from 53,700 to 28,800.[3]

The United States is standing still or falling behind in terms of producing home-grown STEM talent. At the same time, other nations, particularly population-rich ones like India and China, are rapidly increasing the number of STEM professionals that their secondary and postsecondary education systems produce.[4]

These sobering facts indicate that the United States is struggling to keep up with increasing global competition for talent, which depends in large measure on STEM education. The U.S. business community has set a goal of doubling the annual number of U.S. science, technology, engineering and mathematics bachelor's-level graduates to 400,000 by 2015.[5]

An exponentially higher level of STEM technicians with associate degrees or certificates will also be needed across a broad spectrum of industries in the future. Demand for STEM professionals with education and training above a high school diploma but below a bachelor's degree is expected to grow significantly in the coming years.[6] For example, veterinary technicians, nursing assistants, pharmacy technicians, forensic-science technicians and dental hygienists are all among the fastest-growing occupations projected by the Bureau of Labor Statistics.[7]

LACK OF BASIC SCIENCE AND MATH SKILLS

While some of the deficit in STEM professionals can be attributed to lack of interest, there is growing concern that students are not gaining the foundational skills necessary to be successful in STEM career areas even if they choose that path.

Low student performance is evidenced on the U.S. National Assessment of Educational Progress (NAEP). Math scores for 17-year-olds were essentially unchanged from 2004 to 2008, despite the fact that students are taking more and higher-level math courses in high school.[8] In fact, test results showed that 41 percent of those students did not even have an understanding of moderately complex math procedures and reasoning, such as finding averages and making decisions based on graphs.[9]

According to the 2006 Programme for International Student Assessment (PISA), U.S. students performed much worse in science and math than students from other industrialized countries.[10] Of the 30 countries tested, students from 16 countries performed higher than U.S. students in science, and students from 23 countries performed higher than the United States in math.

In addition, scores in the United States were much more closely correlated to socioeconomic status than in other countries. For the U.S. students who took the PISA, 18 percent of the variance was related to socioeconomic status, while only 14 percent of the variance was related to socioeconomic status in other countries.[11] This U.S. income-based achievement gap is further evidenced by the fact that lower-income U.S. students scored an average of 23 points below higher-income students on the math portion of the 2005 12th-grade NAEP.[12]

Achievement gaps also exist among U.S. students based on race and ethnicity, and the gaps are even more dramatic when gender is added. Hispanic and black students lag behind white students on practically every measure of science and math proficiency.[13] On the mathematics portion of the SAT college entrance exam, Asian-American and white students' scores are much higher and are increasing more rapidly than those of black and Hispanic students. Boys significantly outperform girls across all four race/ethnicity categories.[14]

Given the demographic trends of rapidly increasing non-white and less-advantaged populations in the United States, this pattern of low performance among disadvantaged students is a serious concern for the potential future of the STEM workforce.

CTE Provides a Solution

In facing these serious challenges, there is also reason for optimism in America's ability to ignite interest in STEM-related careers and strengthen the STEM literacy of the entire student population. The reason for that optimism stems from a growing level of STEM innovation that has evolved from CTE.

CTE has long been a leader in the integration of high-level academics and technology. For example, CTE courses in agriculture, nutrition and health care have always contained strong science components, in many places earning students core academic credits. During the last decade, however, literally thousands of new cutting-edge, STEM-intensive CTE programs have been launched or expanded in schools across the nation. As these programs move to larger-scale implementation, they have amazing potential to help many additional students prepare for and pursue careers in STEM areas.

CTE programs and related initiatives provide key advantages in addressing the STEM challenge and securing America's leadership in innovation. CTE programs offer students a deeper understanding of STEM career pathways in order to facilitate student transitions into these areas, build interest in STEM and STEM-related careers by making math and science content more relevant and tangible to students through integration, and help grow the STEM workforce pipeline by encouraging more students from underrepresented populations to enter these career fields.

PROVIDING CAREER EXPLORATION AND PATHWAYS

There is a significant challenge in American culture of attracting students to actively pursue STEM careers. According to a recent survey about teen attitudes toward STEM, students are exhibiting a renewed openness toward pursuing STEM professions and showing more interest in developing marketable STEM skills as the nation's economic future becomes more tenuous. However, the survey also indicates that youths' lack of understanding of STEM creates a serious obstacle. "Nearly two-thirds of teens indicated that they may be discouraged from pursuing a career in STEM because they do not know anyone who works in these fields (31 percent) or understand what people in these fields do (28 percent)."[15]

CTE programs, integrated with active career exploration and career advising, help students understand the breadth of careers that have a relationship to STEM and the varied pathways that can lead to those careers. Courses in areas like aviation and aerospace, information technology, engineering, game design, health care, nanotechnology, and simulation and robotics expose students to curricula and careers they may have never even imagined.

Embedded in CTE programs are the support services necessary to help students pursue these rigorous courses and career opportunities, including mentors, career and technical student organizations, and work-based learning opportunities, such as job shadowing and internships, to connect youth with caring adult role models.

STEM-intensive courses are being taught throughout CTE through the use of career clusters, an approach that gives students a broader understanding of the world of careers. There are 16 career clusters containing 81 distinct career pathways.[16] While STEM-related careers exist across the 16 clusters, six are considered STEM intensive: Agriculture, Food and Natural Resources; Health Science; Information Technology; Manufacturing; Science, Technology, Engineering and Mathematics;

"CTE courses, through the thoughtful integration of STEM concepts, can help all students become more STEM literate and increase the chances that these students consider STEM-related careers."

and Transportation, Distribution and Logistics. Within these systems, students can learn more about career options, take personalized career assessments, and better understand the challenging mathematics and science courses they will need to pursue STEM careers.

Through coherent "programs of study," authorized in the federal Carl D. Perkins Career and Technical Education Act, CTE at the secondary level is linked to postsecondary experiences leading to certificates, associate degrees and bachelor's degrees. This is especially critical in STEM fields. While not all STEM professions require bachelor's or more advanced degrees, almost all require some amount of postsecondary education and training.

According to a workforce analysis conducted in 2007, about half of all U.S. jobs fall in the category of "middle skill" jobs—"those that require more than high school, but less than a four-year degree."[17] A large percentage of these middle skill jobs relate directly to STEM.

Through programs of study, CTE students can explore and then enter into a definitive career pathway with the assurance that knowledge and skills will transfer between secondary and postsecondary education, and then into a high-skill, high-wage, high-demand job opportunity. CTE programs put students on a pathway to immediate job opportunities and lifelong career advancement in STEM areas.

SkillsUSA
2015 Contest Projects

Welding

Click the “Print this Section” button above to automatically print the specifications for this contest. Make sure your printer is turned on before pressing the button.

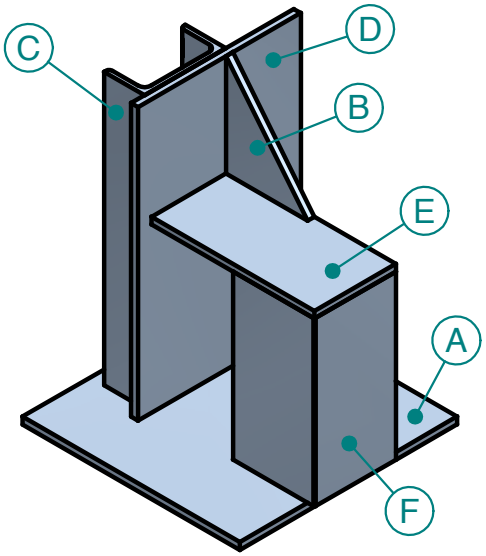

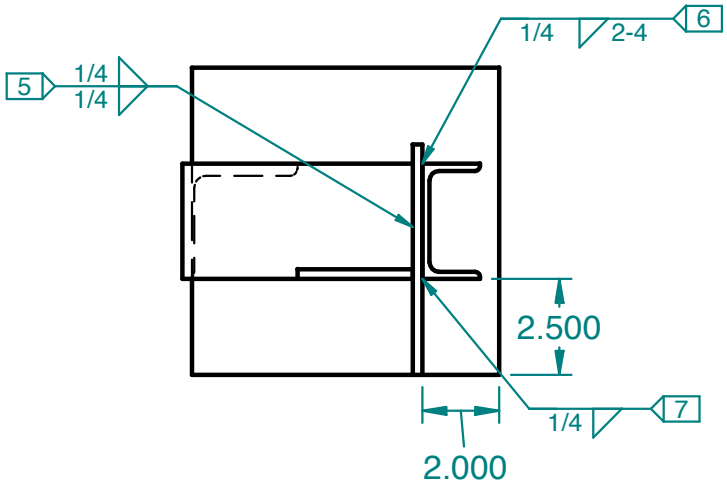

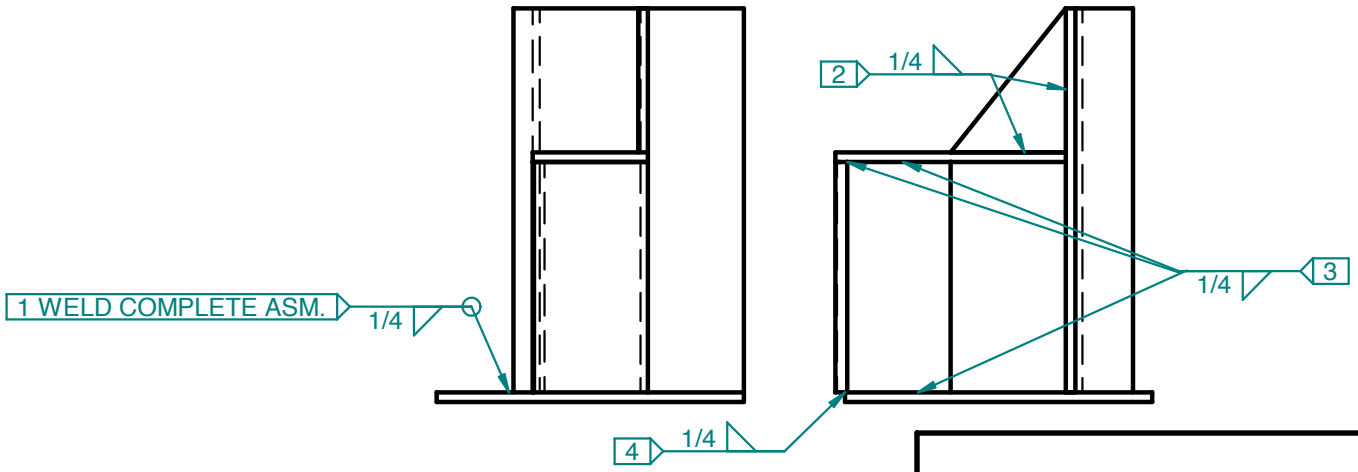

ID	Qty	Title
A	1	0.25 X 8 X 8 Steel Plate
B	1	1/4 x 3 x 3.75 Plate
C	1	3 x 5.0# x 10 Steel Channel
D	1	0.25 x 6 x 10 Steel Plate
E	1	1/4 x 3 x 6 Plate
F	1	5/16 x 3 x 3 x 6 Steel Angle

ALL PROCESSES TO BE COMPLETED WITH THE MATERIALS PROVIDED

1. WELD IN ACCORDANCE WITH WPS# 108
2. TACK COMPLETE ASSEMBLY IN ANY POSITION
3.WELDING TO BE COMPLETED WITH PLATE A FLAT TO THE TABLE
4. ALL VERTICAL WELDS TO BE UPHILL

SkillsUSA

UNLESS OTHERWISE SPECIFIED
DIMENSIONS ARE IN INCHES

2015 National SkillsUSA Welding Contest

TITLE
FCAW College

SIZE
A

SHEET 1 OF 1

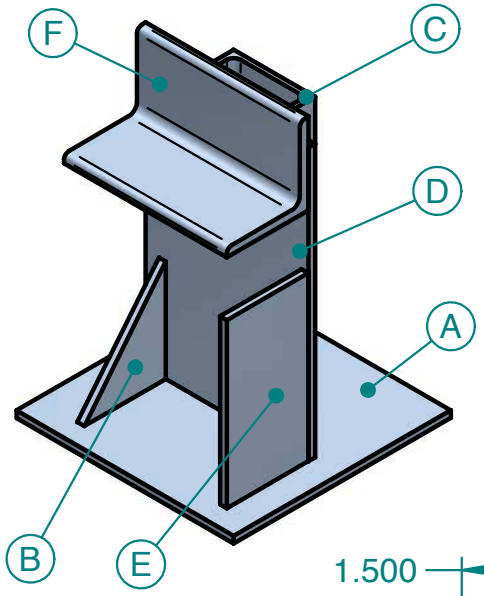

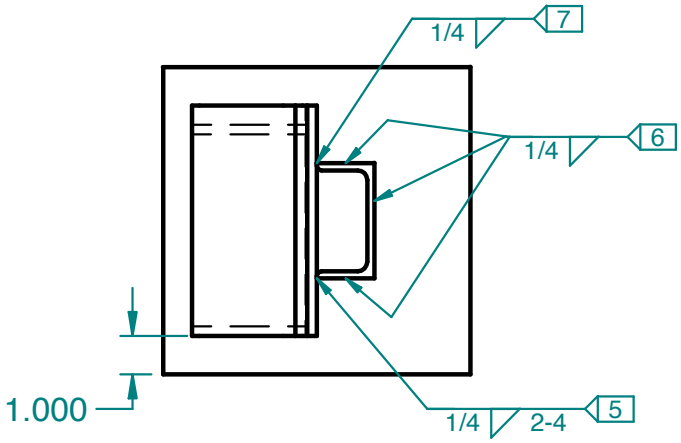

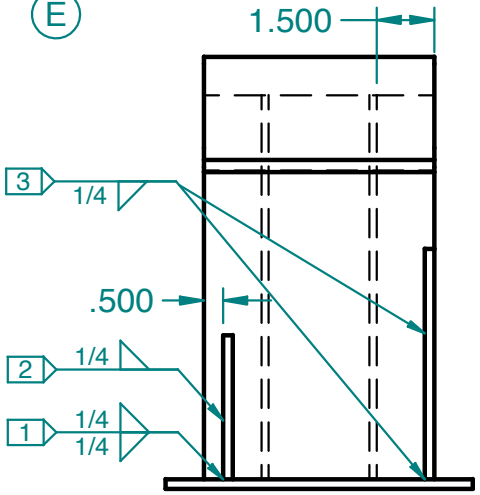

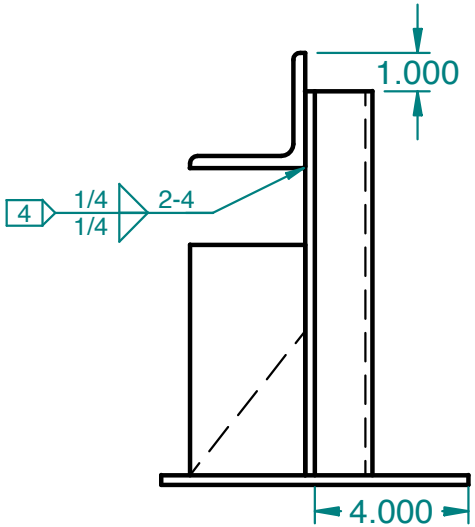

ID	Qty	Title
A	1	0.25 X 8 X 8 Steel Plate
B	1	1/4 x 3 x 3.75 Plate
C	1	3 x 5.0# x 10 Steel Channel
D	1	0.25 x 6 x 10 Steel Plate
E	1	1/4 x 3 x 6 Plate
F	1	5/16 x 3 x 3 x 6 Steel Angle

ALL PROCESSES TO BE COMPLETED WITH THE MATERIALS PROVIDED

1. WELD IN ACCORDANCE WITH WPS# 108
2. TACK COMPLETE ASSEMBLY IN ANY POSITION
3.WELDING TO BE COMPLETED WITH PLATE A FLAT TO THE TABLE
4. ALL VERTICAL WELDS TO BE UPHILL

SkillsUSA

UNLESS OTHERWISE SPECIFIED
DIMENSIONS ARE IN INCHES

2015 National SkillsUSA Welding Contest

TITLE
FCAW H/S

SIZE
A

SHEET 1 OF 1

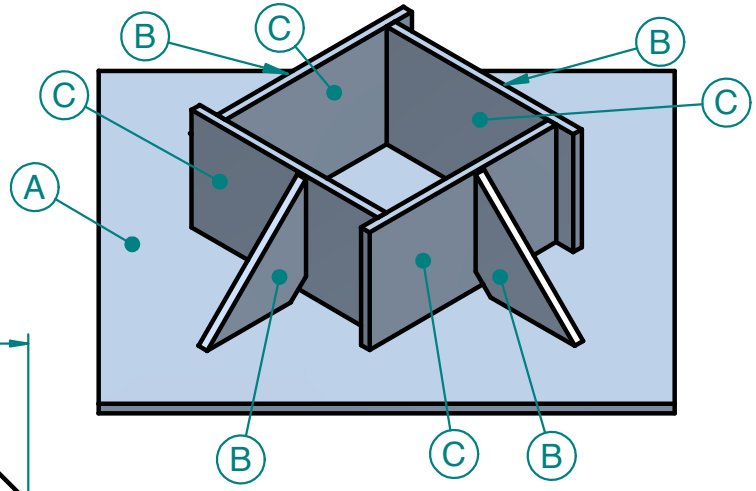

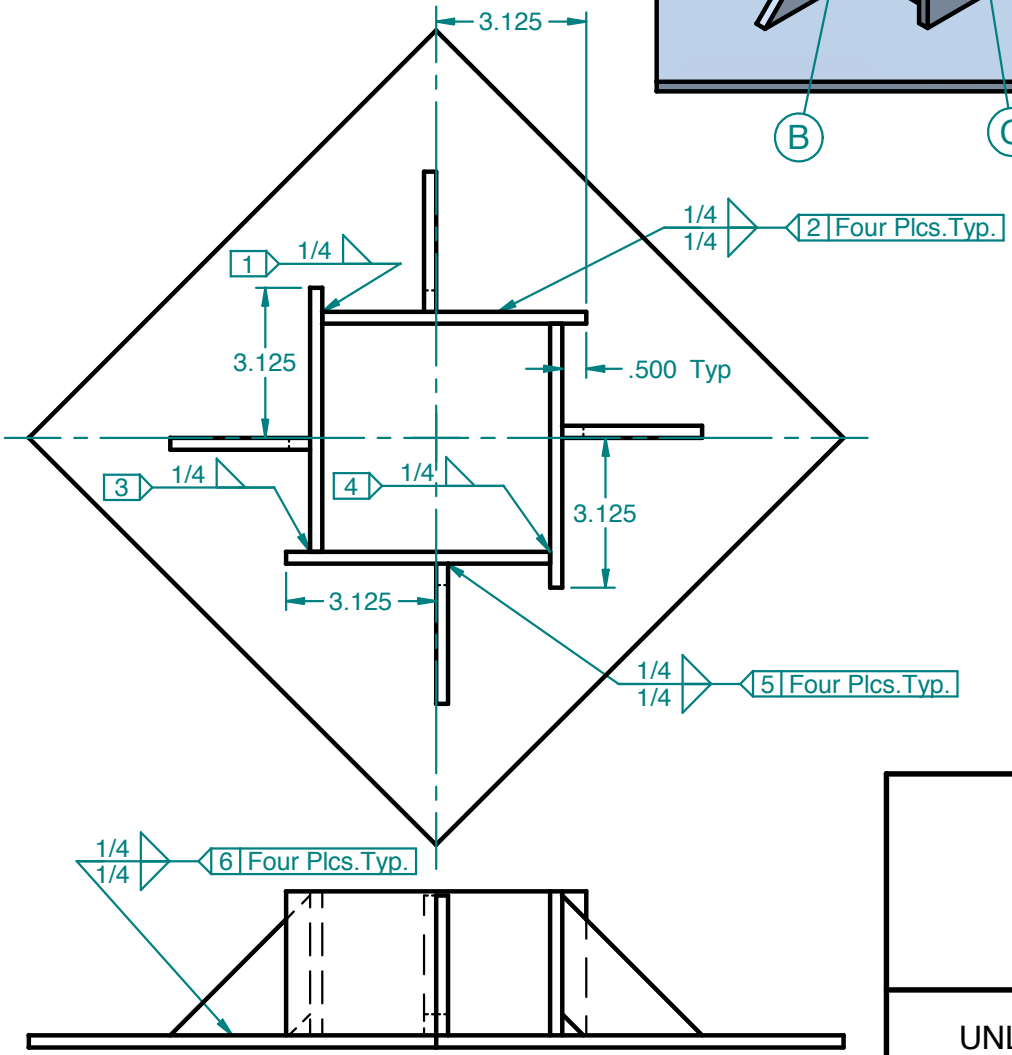

ID	Qty	Title
A	1	.25 x 12 x 12 Plate
B	4	.25 x 2.475 x 4.125 Plate
C	4	.25 x 3 x 5.5 Plate

ALL PROCESSES TO BE COMPLETED WITH THE MATERIALS PROVIDED

1. WELD #2 & #6 IN ACCORDANCE WITH WPS# 110. ALL OTHER WELDS USE WPS# 104.

2. TACK COMPLETE ASSEMBLY IN ANY POSITION

3.WELDING TO BE COMPLETED WITH PLATE A FLAT TO THE TABLE

SkillsUSA

UNLESS OTHERWISE SPECIFIED
DIMENSIONS ARE IN INCHES

2015 National SkillsUSA Welding Contest

TITLE
GMAW College

SIZE
A

SHEET 1 OF 1

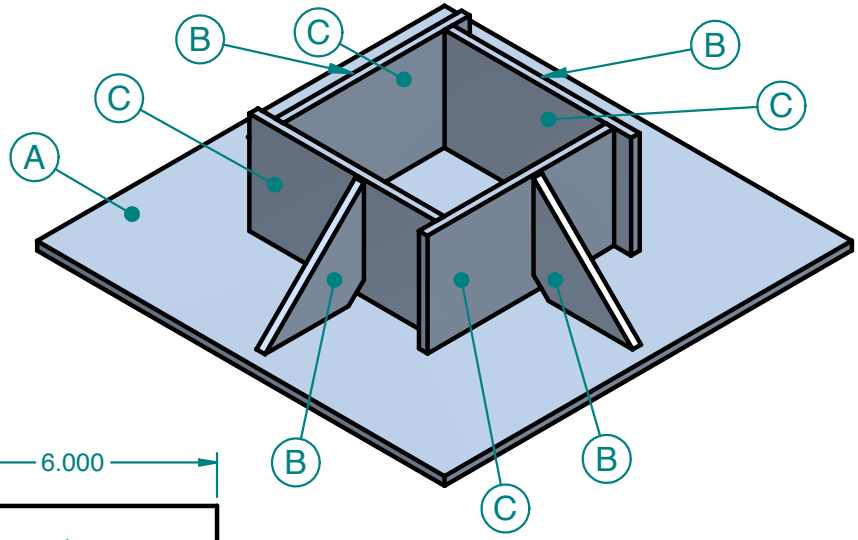

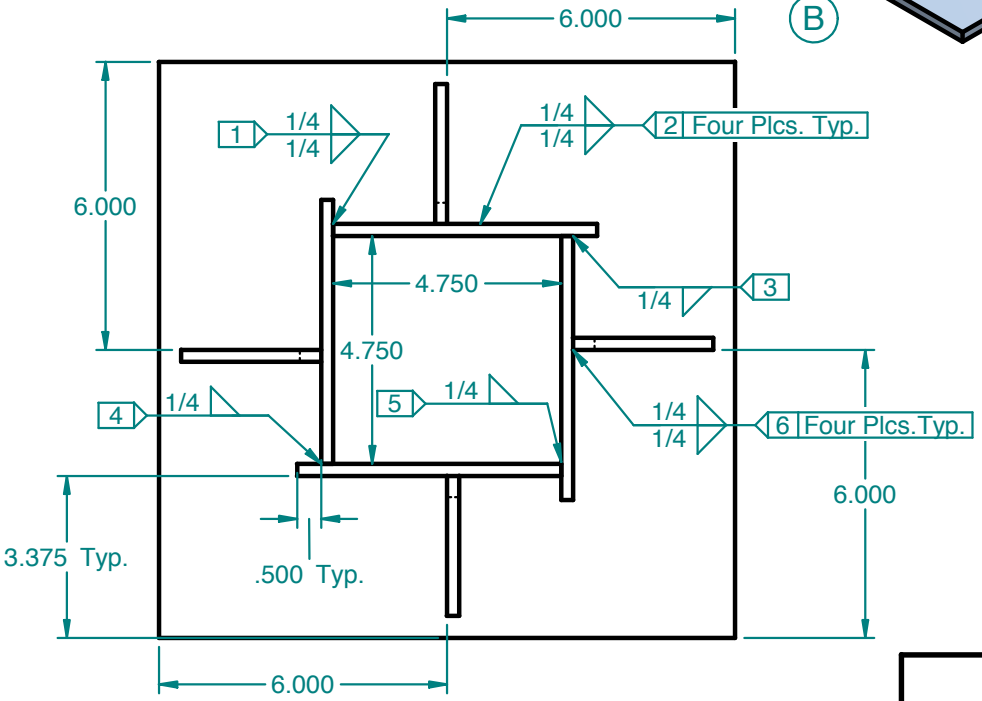

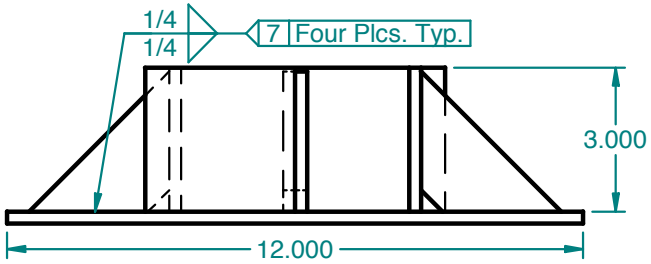

ID	Qty	Title
A	1	.25 x 12 x 12 Plate
B	4	.25 x 2.475 x 4.125 Plate
C	4	.25 x 3 x 5.5 Plate

ALL PROCESSES TO BE COMPLETED WITH THE MATERIALS PROVIDED

1. WELD #2 & #7 IN ACCORDANCE WITH WPS# 110. ALL OTHER WELDS USE WPS# 104.

2. TACK COMPLETE ASSEMBLY IN ANY POSITION

3.WELDING TO BE COMPLETED WITH PLATE A FLAT TO THE TABLE

4. ALL VERTICAL WELDS TO BE UPHILL

SkillsUSA

UNLESS OTHERWISE SPECIFIED DIMENSIONS ARE IN INCHES

2015 National SkillsUSA Welding Contest

TITLE

GMAW HIGH SCHOOL

SIZE A

SHEET 1 OF 1

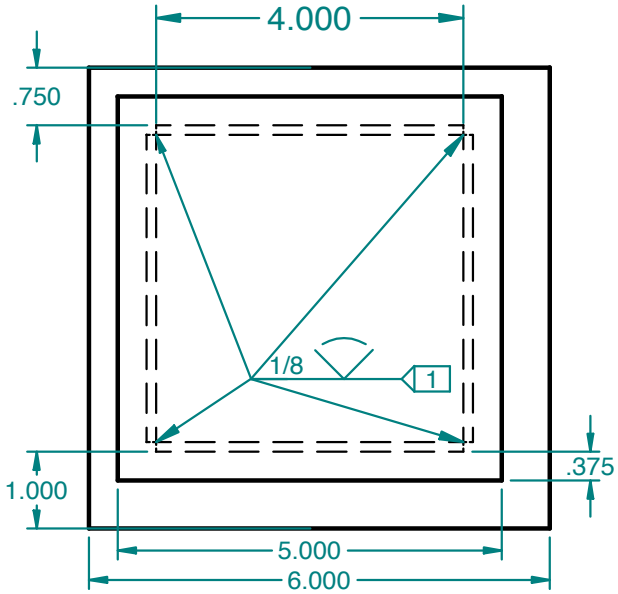

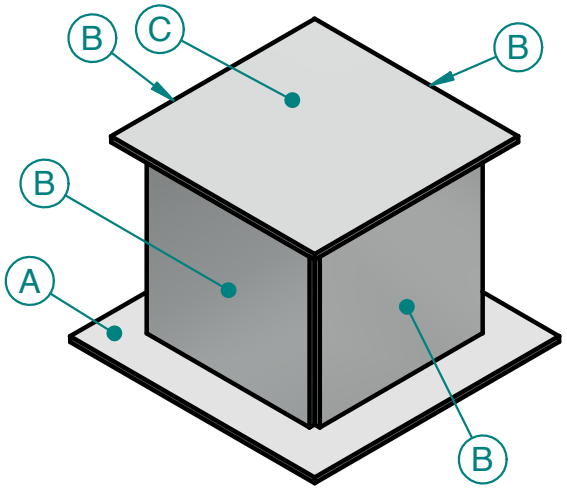

ID	Qty	Title
C	1	0.125 x 5 x 5 Aluminum Sheet
B	4	0.125 x 4 x 4 Aluminum Sheet
A	1	0.125 x 6 x 6 Aluminum Sheet

ALL PROCESSES TO BE COMPLETED WITH THE MATERIALS PROVIDED

1. WELD IN ACCORDANCE WITH WPS# 103
2. TACK COMPLETE ASSEMBLY IN ANY POSITION
3.WELDING TO BE COMPLETED WITH PLATE A FLAT TO THE TABLE
4. ALL VERTICAL WELDS TO BE UPHILL
5. NO POST CLEANING

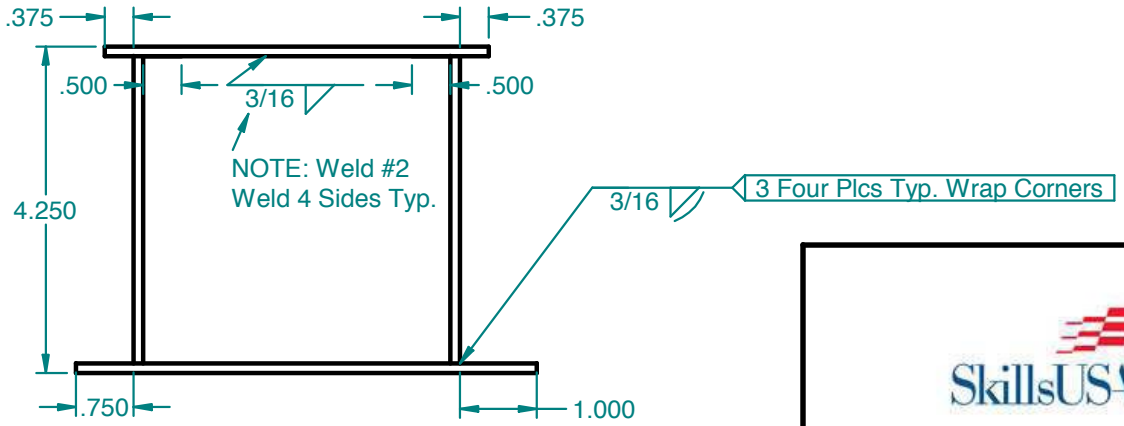

SkillsUSA

UNLESS OTHERWISE SPECIFIED
DIMENSIONS ARE IN INCHES

2015 National SkillsUSA Welding Contest

TITLE
GTAW College

SIZE
A

SHEET 1 OF 1

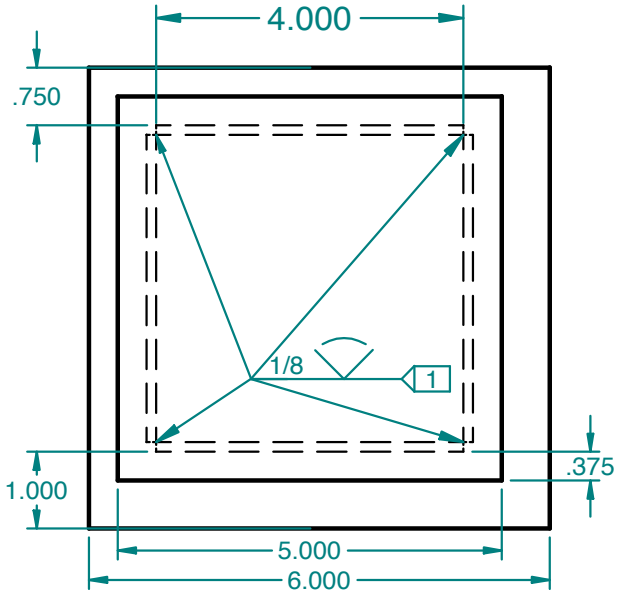

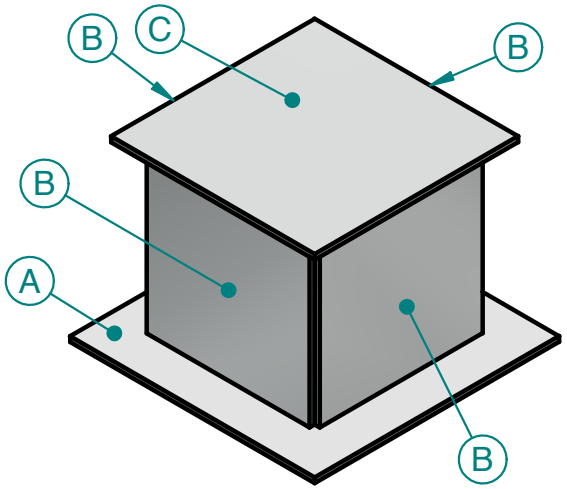

ID	Qty	Title
C	1	0.125 x 5 x 5 Aluminum Sheet
B	4	0.125 x 4 x 4 Aluminum Sheet
A	1	0.125 x 6 x 6 Aluminum Sheet

ALL PROCESSES TO BE COMPLETED WITH THE MATERIALS PROVIDED

1. WELD IN ACCORDANCE WITH WPS# 103
2. TACK COMPLETE ASSEMBLY IN ANY POSITION
3.WELDING TO BE COMPLETED WITH PLATE A FLAT TO THE TABLE
4. ALL VERTICAL WELDS TO BE UPHILL
5. NO POST CLEANING

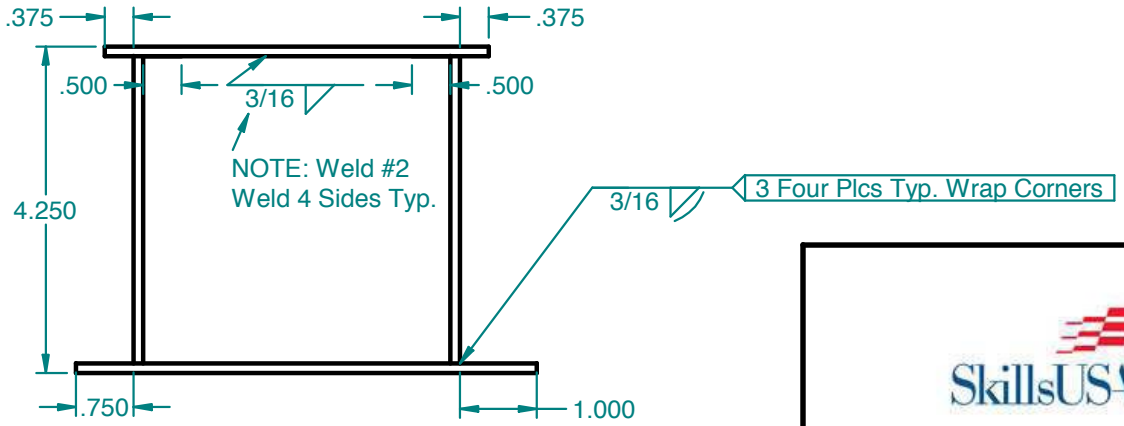

UNLESS OTHERWISE SPECIFIED
DIMENSIONS ARE IN INCHES

2015 National SkillsUSA Welding Contest

TITLE

GTAW H/S

SIZE
A

SHEET 1 OF 1

Welding Competition

Welding Contestants & Advisors:

Welcome to the National SkillsUSA Welding Championship Contest. By winning a Gold Medal at your state welding contest, you have earned a place to compete with other welding students throughout the nation in the following practical skill areas: the Gas Metal Arc Welding process, the Gas Tungsten Arc Welding process, the Shielded Metal Arc Welding process, the Flux Cored Arc Welding process, and the Oxy Acetylene Cutting process. In addition to these practical skills, you are saying you have prepared yourself academically in the areas of welding fundamentals, welding math, visual weld inspection, geometrical layout, blueprint reading, and welding symbols. This contest has been designed to test your abilities in each of those areas and to select the best 'all around' student welder at the National SkillsUSA Championships.

Contest Time

Each day the contest is scheduled to start promptly at 8:30 AM. **Contestants are to report to the contest area at 8:00 A.M.**

Post-Secondary Contestants will compete on WEDNESDAY, JUNE 24TH

High School Contestants will compete on THURSDAY, JUNE 25TH

The welding contest should conclude around 4 PM. At that time all students will be asked to gather their personal property and leave the contest area. Although the offer to help is appreciated, there will be no need for contestants to stay and help tear down the contest area.

DO NOT remove your projects until Friday AM after the debrief.

Hands-on contest areas

In each practical contest area, you will receive a contest drawing, coupons, welding supplies, access to welding/cutting equipment, and a safe place to do your work. Please be advised that the welding power sources, torches, and other welding equipment, provided for your use at the contest, are on loan to this contest and are not to be abused in any way. **Intentional abuse resulting in damage to the welding equipment or any other contest infrastructure will be cause for immediate dismissal from this contest.**

Interview Area

For the Interview area each contestant should have been notified through SkillsUSA to bring your prepared resume. You will be graded on your resume, and communication skills.

START TIME		
7:30-8:00	Competitors be at the Contest Area OUTSIDE the Welding Contest Area Along the South Wall. Line up Numerically with the Lowest Number In the Southeast corner of the building.	
8:00	Contestants Ushered into Contest Area	
8:00-8:30	Safety inspection and additional Instructions for the specific contest area, and Stand By for Contest Start	
8:30-9:30	Round 1 Start/Finish	ROUND #1
9:30-9:45	Transition to Round 2	
9:45-10:45	Round 2 Start/Finish	ROUND #2
10:45-11:00	MOVE TO NEW AREA	
11:00-12:00	Round 3 Start/Finish	ROUND #3
12:00-12:30	LUNCH / Transition to Round 4	LUNCH
12:30-1:30	Round 4 Start/Finish	ROUND #4
1:30-1:45	MOVE TO NEW AREA	
1:45-2:45	Round 5 Start/Finish	ROUND #5
2:45 - 3:00	Transition to Round 6	
3:00-4:00	Round 6 Start/Finish	ROUND #6
4:00	Contest Over! Contestants can leave when they are finished and have their project turned in for evaluation.	

What Happens After Roll Call

Once everyone has been identified, you will only be known by your id number assigned from SkillsUSA. So please place your name tag so that it shows your contestant number. On your Contest Day, place your number on the back of your welding jacket and keep that number visible for the judges. You will be assigned to a contest area as roll call is completed on the floor. Each contestant group will contain sixteen contestants. Once students have successfully been assigned to a contestant group, they will be escorted to their assigned contest area for further briefing and a welding apparel safety inspection. Contestants must wear the official SkillsUSA uniform. Failure to do so will result in a clothing penalty.

After arrival at the initial process station and subsequent apparel safety inspection, the contestants can get prepared for the contest start. For those contestants starting in one of the welding or cutting processes, this would be a good time to put on your personal protection gear needed for those processes. You will be asked to stand-by and wait to enter your process station until the buzzer sounds indicating the beginning of the contest. Inside the welding/cutting process station, all the materials needed for you to complete your task will be provided. Do not enter the process station or booth until told to do so.

Welding Competition

Once The Contest Begins

Be forewarned that any coincidental glimpse of a welded coupon may not provide accurate advance information to contestants if it is not welded correctly. Just be confident of your own abilities and concentrate on doing your own work. Looking at someone else's work may not be a good idea and can throw you off.

Each contest station is time limited to sixty minutes. At the end of each contest period, the students will be instructed to stop immediately. Depending on what Contest area you are, you will either pack up your tools, and proceed to the next process station or remain outside of your booth until instructed to begin the next round. There is fifteen minutes to transition from one station to another. After the transition period, the next contest station will begin, whether or not every contestant is ready. Contestants will, once again, stand outside the process station until instructed to enter.

Do's and Dont's

DO relax and have some fun.

DO NOTIFY a contest area judge or contest volunteer if you need to leave to use the rest room and follow the do not's below and make it quick.

DO NOT WELD ON THE TABLE SURFACES

DO NOT plan to use 'shared' tools from a fellow student.

DO NOT 'Give up' and walk away from the contest without consulting the contest chairman.

DO NOT talk to anyone outside the contest area.

DO NOT talk to your weld advisor.

DO NOT abuse the equipment.

DO NOT Enter the weld booth or begin work until instructed.

Even casual conversation may be perceived as information sharing and may result in disqualification from the contest. For those occasions when the student is required to sit and wait, some casual conversation may naturally occur and may not warrant such disqualification. Plus, it is essentially every one for them selves to see who can win.

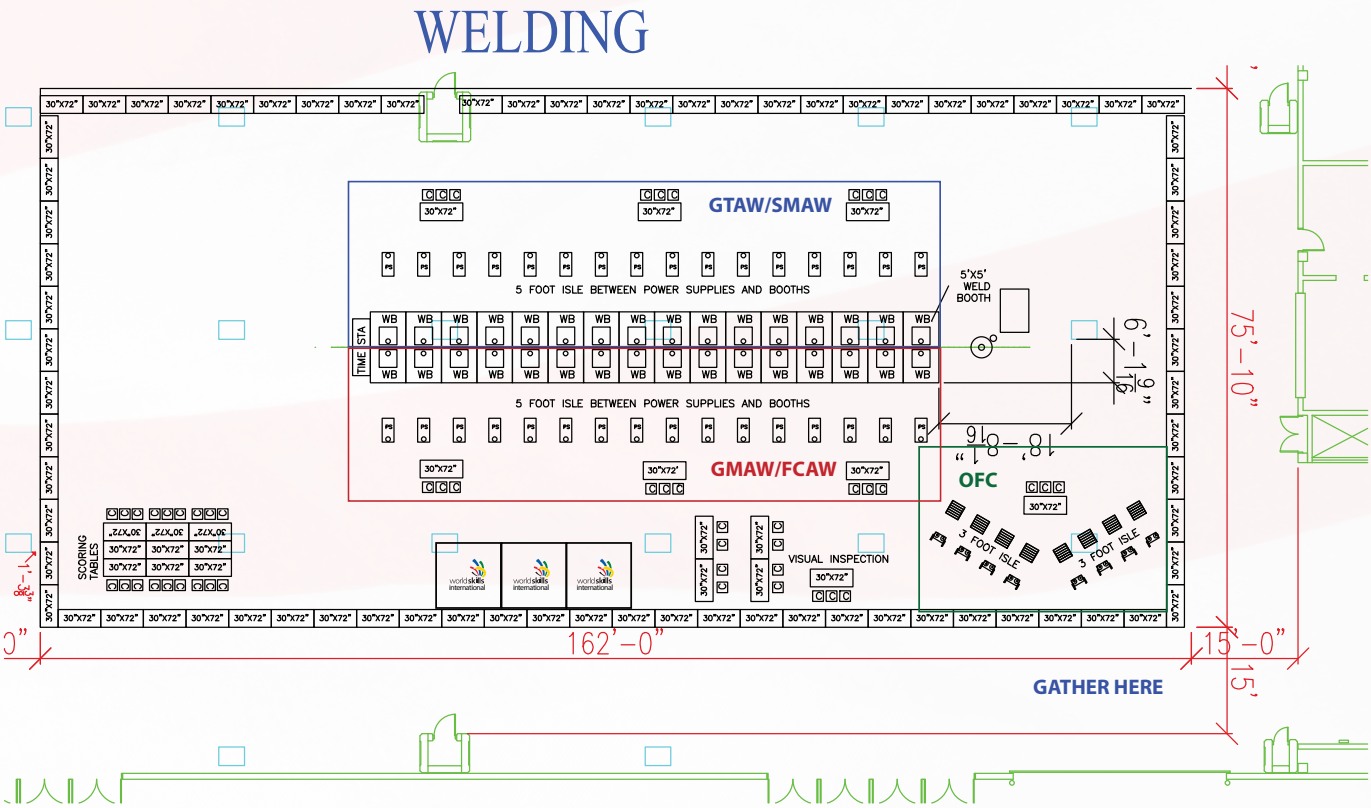

Welding Competition

What To Do If You Have A Problem

IMMEDIATELY, alert one of the process monitors so that we can troubleshoot your problem. If there is a problem with the items we provided, the competitor will be allowed make up time. However, no make up time will be allowed if the student stops and asks for help with contest specifics such as drawing details or weld symbol interpretation or basic welding knowledge that is being tested, including machine set up and weld settings.

Taking Home Your Project

On Friday morning **AFTER** the Debriefing, after clearance from the Contest Chair, those contestants that wish to claim their welded coupons are welcome to do so.

Any unclaimed contestant coupons left within 1 hour of the end of the contest debriefing will be considered forfeited and will be removed from the contest area. You can not take any other weldments than your own. Taking completed projects from another school or competitor will result in immediate disqualification of the student that removed the competitor's project. The only exception made will be where the advisor has asked via e-mail or in writing to the contest chairman to have another advisor take his student's projects back for them because of travel logistics.

Important Notes:

CONTESTANTS: The welding contestants will bring their tools and proper welding attire & safety gear **INCLUDING WORK BOOTS.**

DO NOT ENTER THE CONTEST AREAS DURING SET UP DAY THERE ARE NO GUARANTEES THAT TOOLS WILL BE SECURE IF YOU DROP THEM OFF TO THE SITE EARLY.

ABSOLUTELY NO CELL PHONES ARE ALLOWED WITHIN THE CONTEST AREA. Keep all cell phones turned off, stored in a safe place out of sight during the contest, Also, no headphones or personal music devices are allowed.

LUNCH WILL BE PROVIDED. Should a student require something to snack on between breakfast and lunch they must bring their own snack. Keep in mind that there will be little opportunity to have a snack during the contest but a quick energy bar may be a good thing to have handy if hunger strikes.

Scoring

You will be judged on all aspects related to your project. Be aware that you may be the best welder in your state, and still not win the contest if you do not follow the specific instructions. The scoring has specific yes/no questions to evaluate the welds. The questions are designed around AWS D1.1 Structural Welding Code - Steel, Visual Inspection Criteria.

These questions shown below are only samples of the type of evaluation being performed. Each question is assigned points and these questions as well as the amount of points assigned may change slightly over the years. The key however is that the evaluation will be consistent and objective and this is a sample of the logic that each evaluation criteria will use to determine points awarded.

Sample Evaluation Questions
Sample of questions used to evaluate and score welds. Everything is Yes or No it meets criteria or it does not just like when welding to a code.
Is the amperage within range specified on the WPS?
Is the voltage within range specified on the WPS?
Is the welding being performed in the correct position?
Is the wire feed speed within range specified on the WPS?
Was their a safety infraction? Yes/No Explain
Is the Project Assembled In Accordance to the Drawing?
Crater Cross Section. All craters should be filled to provide the specified weld size, except for the end of intermittent fillet welds outside of their effective length. Are the weld craters completely filled to the weld size?
Porosity. No visible porosity is acceptable, Does the Weld Meet this Requirement?
Undercut. Not to exceed 1/32 in depth for a total accumulated length of 1/2in. Does the weld meet this requirement?
Undersized Welds. Weld Size not to be larger by anything greater than 1/16 in. anywhere along the weld length and no smaller than specified on the drawing. Does the weld size meet this requirement?
Weld/Base metal Fusion. Complete fusion shall exist between base and weld metal. Does the weld display complete fusion with no cold lap?
There shall be no Arc Marks outside the weld area. Does the weld meet this requirement?
Does Cut meet the ID and OD of the Go / no-go gauge?

Welding Competition

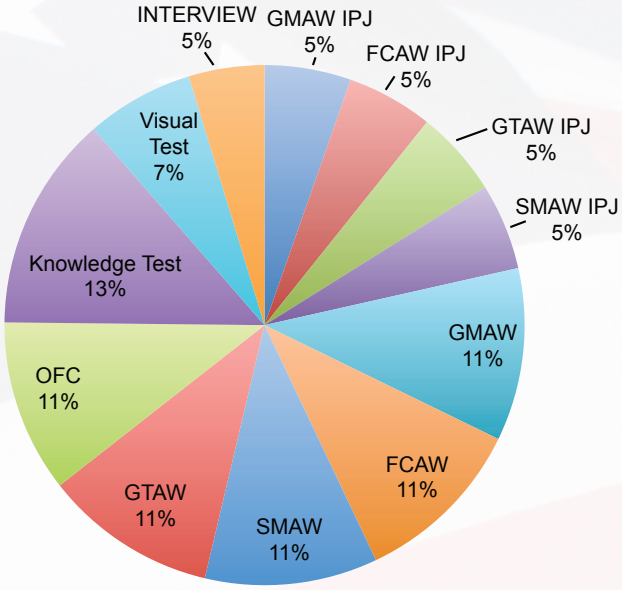

All percentages are based on a 1000 Point Scale.

Figure 1 – Breakdown of Contest Areas
(These are the points that you will see from SkillsUSA)

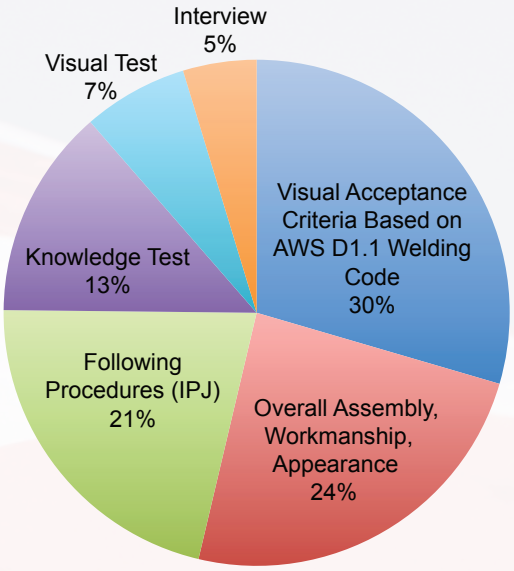

Note: All percentages shown are generated by Excel and rounding occured in some instances.

Figure 2 – Areas that the Scoring System Evaluates

In the event of a tie, the first area that identifies a score separation will separate places. Those areas will be looked at in this order until the first separation occurs and that will determine place:

1. Safety Violations
2. Clothing Penalty
3. Resume Penalty
4. Knowledge Test
5. Visual Test
6. Interview
7. GMAW
8. GTAW
9. FCAW
10. SMAW
11. OFC
12. GMAW IPJ
13. GTAW IPJ
14. FCAW IPJ
15. SMAW IPJ

The last resort will be to line up the tied projects, and at the discretion of the Contest Chairman, 5 individual experts will be selected to vote the ranking based on their professional opinion. It is only at this point that subjectivity will select a winner.

The Results are broken down by contest area and you can see on the table and pie charts above how those results fit with the areas evaluated.

Good Luck!

The goals of the SkillsUSA Welding Technical Committee are to operate an honest, fair, and rewarding contest. Everyone involved in managing this contest truly strives to make that happen in an effort to reward excellence among America's future welding workforce. We all wish you the best in the competition and in your welding careers!

Respectfully,

The National Welding SkillsUSA Technical Committee

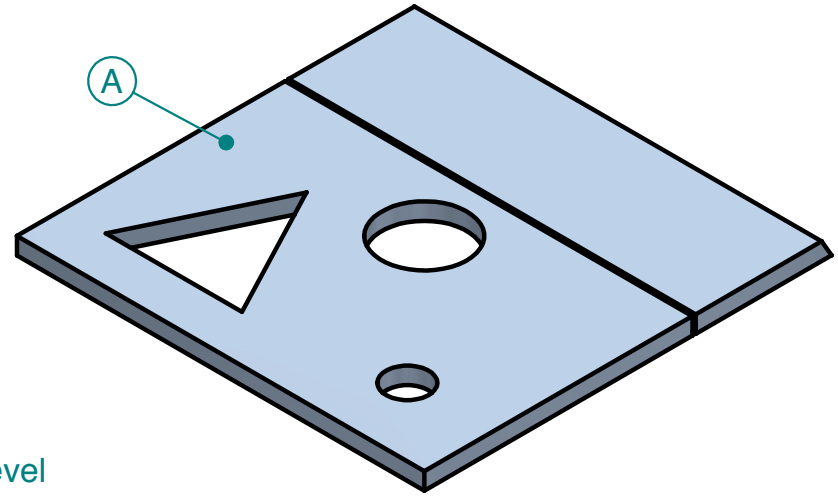

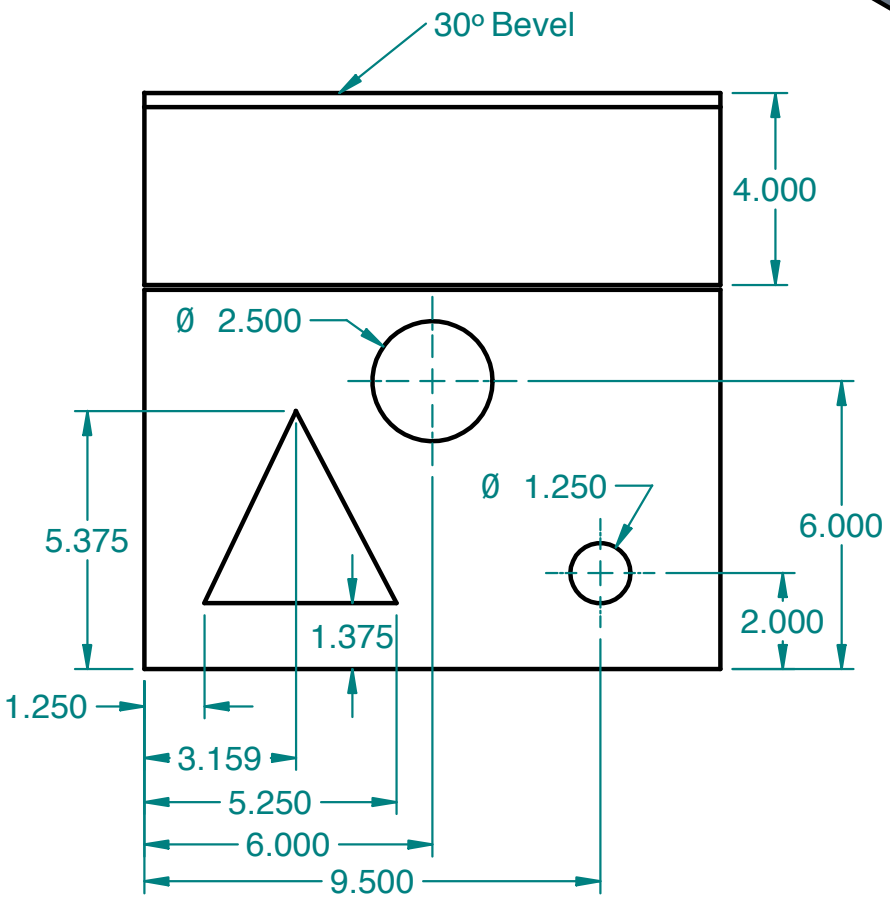

ID	Qty	Title
A	1	1/2 x 12 x 12 Plate

ALL PROCESSES TO BE COMPLETED WITH THE MATERIALS PROVIDED

1. LAYOUT IN ANY POSITION

2.CUTTINGTO BE COMPLETED WITH PLATE FLAT ON TABLE

SkillsUSA

UNLESS OTHERWISE SPECIFIED
DIMENSIONS ARE IN INCHES

2015 National SkillsUSA Welding Contest

TITLE

OFC College

SIZE
A

SHEET 1 OF 1

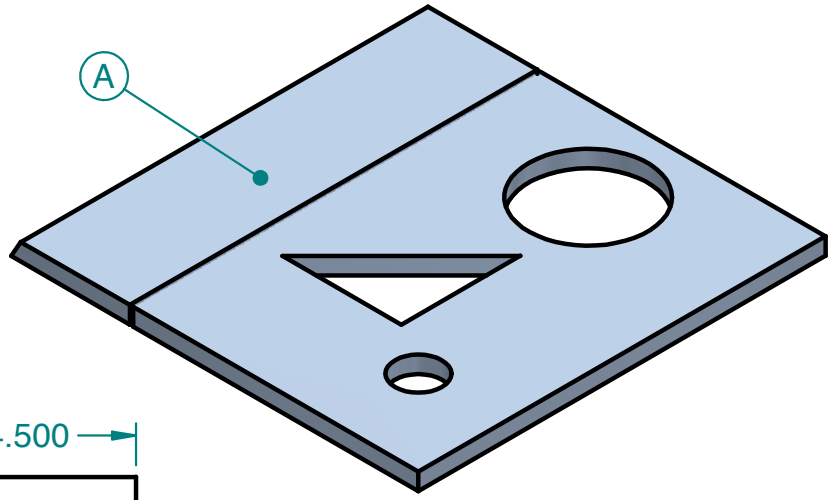

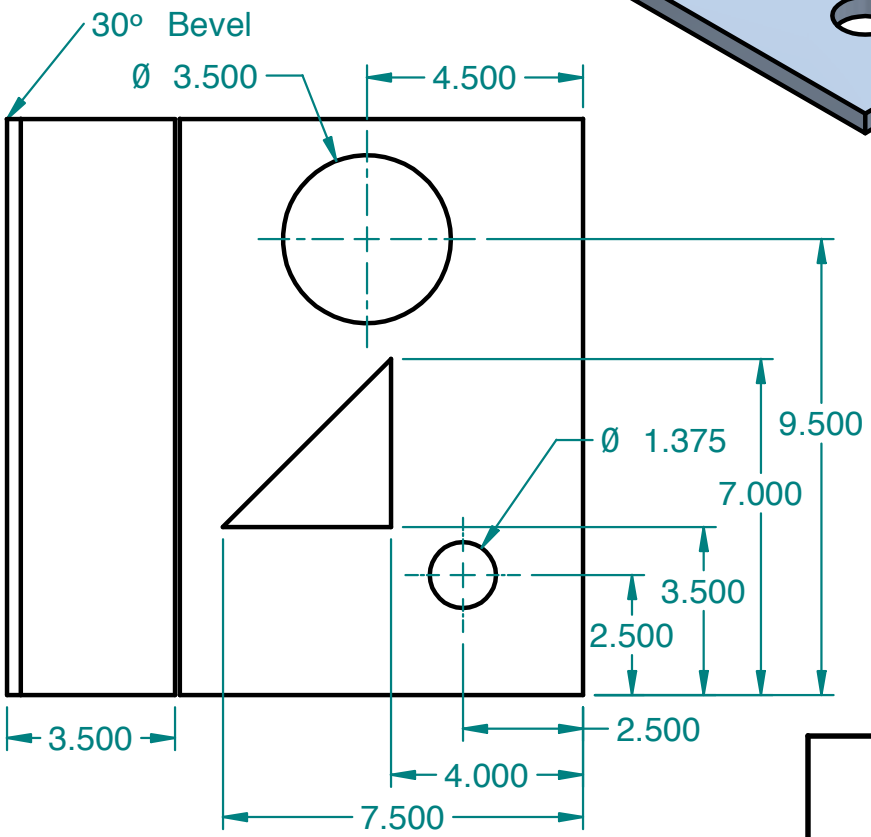

ID	Qty	Title
A	1	0.5 x 12 x 12 Steel Plate

ALL PROCESSES TO BE COMPLETED WITH THE MATERIALS PROVIDED

1. LAYOUT IN ANY POSITION

2.CUTTINGTO BE COMPLETED WITH PLATE FLAT ON TABLE

SkillsUSA

UNLESS OTHERWISE SPECIFIED
DIMENSIONS ARE IN INCHES

2015 National SkillsUSA Welding Contest

TITLE OFC High School

SIZE A

SHEET 1 OF 1

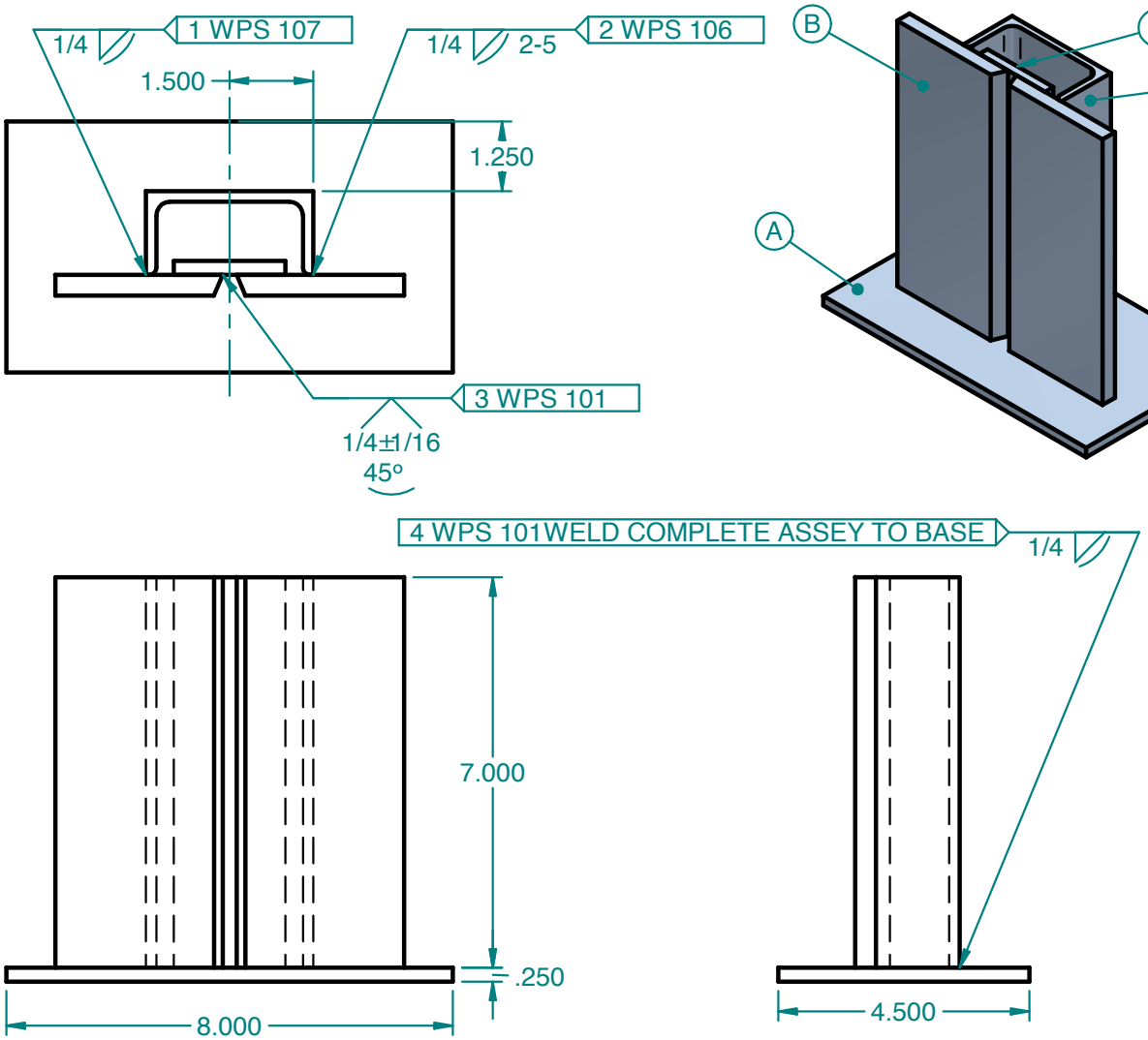

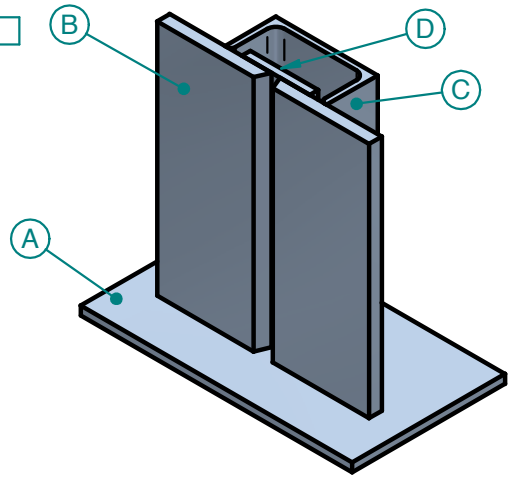

ID	Qty.	Desc.
A	1	0.25 X 4.5 X 8 Steel Plate
B	2	3/8 x 7 x 3 22.5 Bevel One End
C	1	3 x 5.0# x 7 Steel Channel
D	1	0.25 x 2 x 7 Steel Plate

ALL PROCESSES TO BE COMPLETED WITH THE MATERIALS PROVIDED

1. TACK COMPLETE ASSEMBLY IN ANY POSITION

2.WELDING TO BE COMPLETED WITH THE GROOVE WELD IN THE 2G POSITION WITH PLATE A ON THE LEFT END OF THE GROOVE WELD JOINT.

SkillsUSA

UNLESS OTHERWISE SPECIFIED
DIMENSIONS ARE IN INCHES

2015 National SkillsUSA Welding Contest

TITLE
SMAW College

SIZE
A

SHEET 1 OF 1

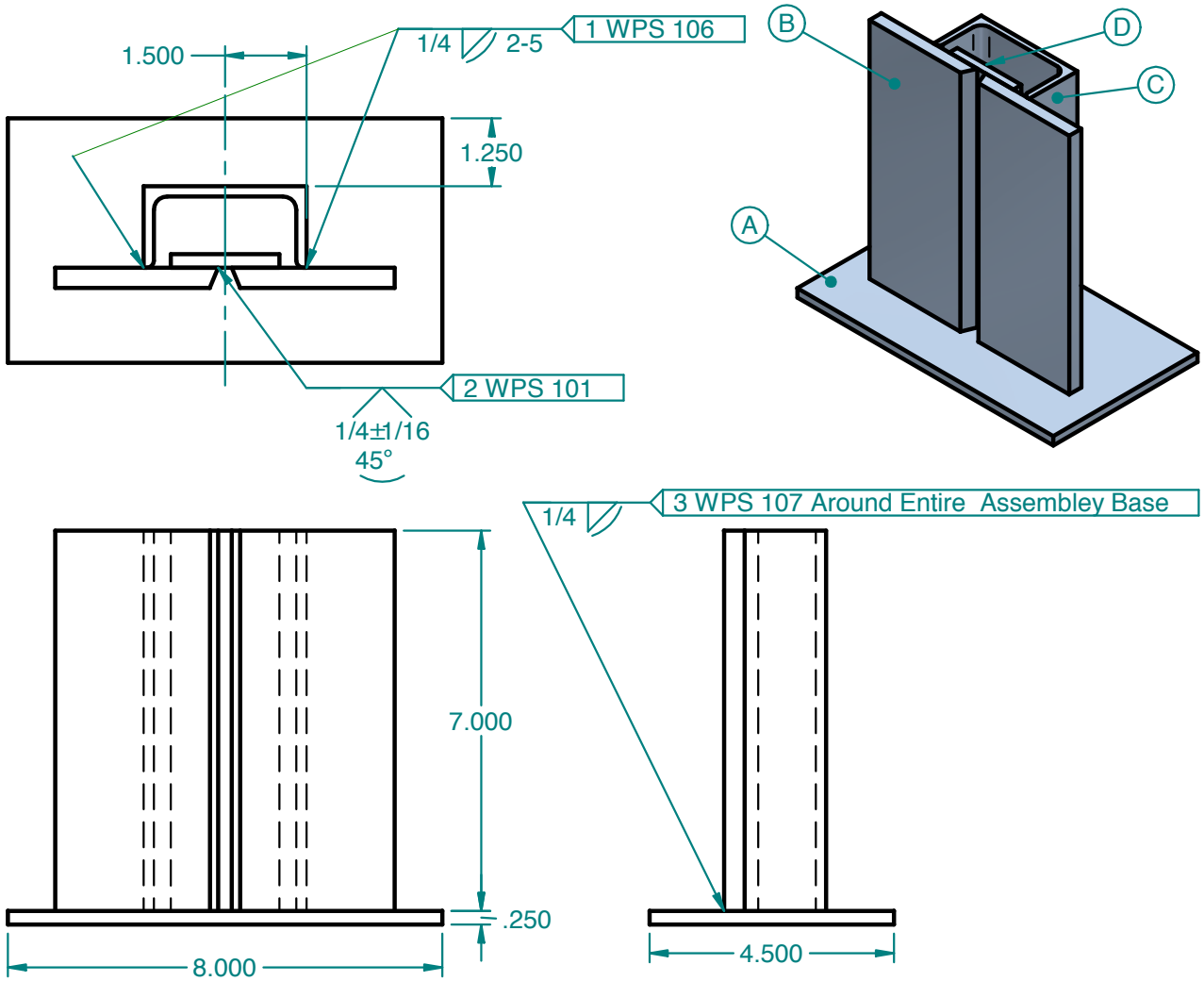

ID	Qty.	Desc.
A	1	0.25 X 4.5 X 8 Steel Plate
B	2	3/8 x 7 x 3 22.5 Bevel One End
C	1	3 x 5.0# x 7 Steel Channel
D	1	0.25 x 2 x 7 Steel Plate

ALL PROCESSES TO BE COMPLETED WITH THE MATERIALS PROVIDED

1. TACK COMPLETE ASSEMBLY IN ANY POSITION

2.WELDING TO BE COMPLETED WITH THE GROOVE WELD IN THE 3G POSITION WITH PLATE A ON THE TABLE

SkillsUSA

UNLESS OTHERWISE SPECIFIED
DIMENSIONS ARE IN INCHES

2015 National SkillsUSA Welding Contest

TITLE
SMAW HIGH SCHOOL

SIZE
A

SHEET 1 OF 1

SkillsUSA

Welding Procedure Specification

WPS 101

WPS No. **WPS 101** Revision **3** Date **4/21/2013** By **NP**

Authorized By **GH** Date **5/15/2011** Prequalified ☒

Welding Process(es) **SMAW** Type: Manual ☒ Machine ☐ Semi-Auto ☐ Auto ☐

Supporting PQR(s) **Prequalified**

JOINT

Type **Butt / T-Joint**

Backing Yes ☒ No ☐ Single Weld ☒ Double Weld ☐

Backing Material **A-36**

Root Opening **1/4" ±1/16"** Root Face Dimension **0" - 1/8"**

Groove Angle **45 Deg.** Radius (J-U) **N/A**

Back Gouge Yes ☐ No ☒

Method **N/A**

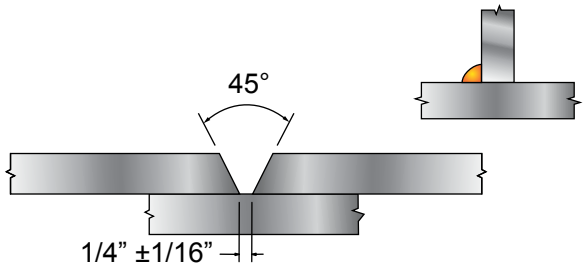

BASE METALS

Material Spec. **A-36** to **A-36**

Type or Grade to

Thickness: Groove (in) **1/8** - **3/4**

Fillet ( )**Unlimited** -

Diameter (Pipe, in) **4** - **Unlimited**

FILLER METALS

AWS Specification **A5.1**

AWS Classification **E-7018**

SHIELDING

Flux **N/A**

Electrode-Flux (Class) **N/A**

Gas **N/A**

Composition **N/A**

Flow Rate **N/A**

Gas Cup Size **N/A**

PREHEAT

Preheat Temp., Min. **60 Deg.F**

Thickness Up to 3/4" Temperature **N/A**

Over 3/4" to 1-1/2" **N/A**

Over 1-1/2" to 2-1/2" **N/A**

Over 2-1/2" **N/A**

Interpass Temp., Min. **N/A** Max. **N/A**

POSITION

Position of Groove **1G,2G,3G,4G,5G** Fillet **1F,2F,3F,4F,5F**

Vertical Progression: ☒ Up ☐ Down

ELECTRICAL CHARACTERISTICS

Transfer Mode (GMAW):

Short-Circuiting ☐ Globular ☐ Spray ☐

Current: AC ☐ DCEP ☒ DCEN ☐ Pulsed ☐

Other **N/A**

Tungsten Electrode (GTAW):

Size **N/A** Type **N/A**

TECHNIQUE

Stringer or Weave Bead **Both**

Multi-pass or Single Pass (per side) **Single / Multiple**

Number of Electrodes **1**

Electrode Spacing: Longitudinal **N/A**

Lateral **N/A**

Angle **N/A**

Contact Tube to Work Distance **N/A**

Peening **N/A**

Interpass Cleaning **Chip slag and wire brush**

POSTWELD HEAT TREATMENT

PWHT Required ☐

Temp. **N/A** Time **N/A**

WELDING PROCEDURE

Layer/Pass	Process	Filler Metal Class	Diameter	Cur. Type	Amps	Volts	Travel Speed	Other Notes
All	SMAW	E-7018	3/32	DCEP	70-110	N/A	4-10 ipm	
			OR					
All	SMAW	E-7018	1/8	DCEP	90-150	N/A	4-10 ipm	

SkillsUSA

Welding Procedure Specification

WPS 103

WPS No. **WPS 103** Revision **2** Date **04/20/2013** By **NP**

Authorized By **GH** Date **5/15/2011** Prequalified ☒

Welding Process(es) **GTAW** Type: Manual ☒ Machine ☐ Semi-Auto ☐ Auto ☐

Supporting PQR(s) **Prequalified**

JOINT

Type **T-Joint / Corner**

Backing Yes ☐ No ☒ Single Weld ☒ Double Weld ☐

Backing Material **N/A**

Root Opening **0** Root Face Dimension **0**

Groove Angle **30-90** Radius (J-U) **N/A**

Back Gouge Yes ☐ No ☒

Method **N/A**

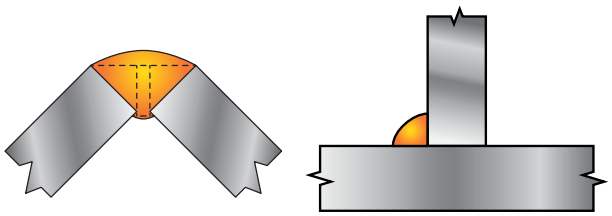

BASE METALS

Material Spec. **3003** to **3003**

Type or Grade to

Thickness: Groove ( ) **Unlimited** - **N/A**

Fillet (in) **Unlimited** -

Diameter (Pipe,) **N/A** - **N/A**

FILLER METALS

AWS Specification **A5.10**

AWS Classification **ER4043**

SHIELDING

Flux **N/A**

Electrode-Flux (Class) **N/A**

Gas **100%Argon**

Composition **100%Argon**

Flow Rate **15-25 CFH**

Gas Cup Size **3/8" Min. (#6)**

PREHEAT

Preheat Temp., Min. **60 Deg.F**

Thickness Up to 3/4" Temperature **N/A**

Over 3/4" to 1-1/2" **N/A**

Over 1-1/2" to 2-1/2" **N/A**

Over 2-1/2" **N/A**

Interpass Temp., Min. **N/A** Max. **N/A**

POSITION

Position of Groove **All** Fillet **All**

Vertical Progression: ☒ Up ☐ Down

ELECTRICAL CHARACTERISTICS

Transfer Mode (GMAW):

Short-Circuiting ☐ Globular ☐ Spray ☐

Current: AC ☒ DCEP ☐ DCEN ☐ Pulsed ☐

Other **N/A**

Tungsten Electrode (GTAW):

Size **3/32"** Type **EWCe2**

TECHNIQUE

Stringer or Weave Bead **Stringer**

Multi-pass or Single Pass (per side) **Multiple/Single**

Number of Electrodes **1**

Electrode Spacing: Longitudinal **N/A**

Lateral **N/A**

Angle **N/A**

Contact Tube to Work Distance **N/A**

Peening **N/A**

Interpass Cleaning

POSTWELD HEAT TREATMENT

PWHT Required ☐

Temp. **N/A** Time **N/A**

WELDING PROCEDURE

Layer/Pass	Process	Filler Metal Class	Diameter	Cur. Type	Amps	Volts	Travel Speed	Other Notes
All	GTAW	ER4043	3/32"	AC	110-150	N/A	4-8 ipm	

SkillsUSA

Welding Procedure Specification

WPS 104

WPS No. **WPS 104** Revision **2** Date **06/20/2015** By **NP**

Authorized By **EN** Date **6/20/2015** Prequalified ☒

Welding Process(es) **GMAW-S** Type: Manual ☐ Machine ☐ Semi-Auto ☒ Auto ☐

Supporting PQR(s) **Prequalified**

JOINT

Type **T-Joint**

Backing Yes ☐ No ☒ Single Weld ☒ Double Weld ☒

Backing Material **N/A**

Root Opening **N/A** Root Face Dimension **N/A**

Groove Angle **N/A** Radius (J-U) **N/A**

Back Gouge Yes ☐ No ☒

Method **N/A**

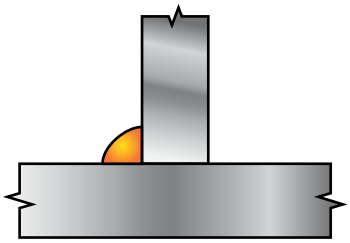

BASE METALS

Material Spec. **A 36** to **A 36**

Type or Grade to

Thickness: Groove ( ) **N/A** - **N/A**

Fillet (in) **Unlimited** -

Diameter (Pipe,) **N/A** - **N/A**

FILLER METALS

AWS Specification **A5.18**

AWS Classification **ER70S-6**

SHIELDING

Flux **N/A**

Electrode-Flux (Class) **N/A**

Gas **M20-ArC-10**

Composition **90%Argon/10%CO2**

Flow Rate **35-45 CFH**

Gas Cup Size **1/2" - 3/4"**

PREHEAT

Preheat Temp., Min. **60 Deg.F**

Thickness Up to 3/4" Temperature **N/A**

Over 3/4" to 1-1/2" **N/A**

Over 1-1/2" to 2-1/2" **N/A**

Over 2-1/2" **N/A**

Interpass Temp., Min. **N/A** Max. **N/A**

POSITION

Position of Groove **All** Fillet **All**

Vertical Progression: ☒ Up ☐ Down

ELECTRICAL CHARACTERISTICS

Transfer Mode (GMAW):

Short-Circuiting ☒ Globular ☐ Spray ☐

Current: AC ☐ DCEP ☒ DCEN ☐ Pulsed ☐

Other **N/A**

Tungsten Electrode (GTAW):

Size **N/A** Type **N/A**

TECHNIQUE

Stringer or Weave Bead **Stringer**

Multi-pass or Single Pass (per side) **Single**

Number of Electrodes **1**

Electrode Spacing: Longitudinal **N/A**

Lateral **N/A**

Angle **N/A**

Contact Tube to Work Distance **1/4" to 3/8"**

Peening **N/A**

Interpass Cleaning **Chip slag and wire brush**

POSTWELD HEAT TREATMENT

PWHT Required ☐

Temp. **N/A** Time **N/A**

WELDING PROCEDURE

Layer/Pass	Process	Filler Metal Class	Diameter	Cur. Type	Amps	Volts	Travel Speed	Other Notes
All	GMAW	ER70S-6	0.035"	DCEP	90-150	16-20	6-8 ipm	WFS 100-270 ipm

SkillsUSA

Welding Procedure Specification

WPS 106

WPS No. **WPS 106** Revision **2** Date **4/20/2012** By **NP**

Authorized By **GH** Date **5/15/2011** Prequalified ☒

Welding Process(es) **SMAW** Type: Manual ☒ Machine ☐ Semi-Auto ☐ Auto ☐

Supporting PQR(s) **Prequalified**

JOINT

Type **T-Joint**

Backing Yes ☐ No ☒ Single Weld ☒ Double Weld ☐

Backing Material **N/A**

Root Opening **N/A** Root Face Dimension **N/A**

Groove Angle **N/A** Radius (J-U) **N/A**

Back Gouge Yes ☐ No ☒

Method **N/A**

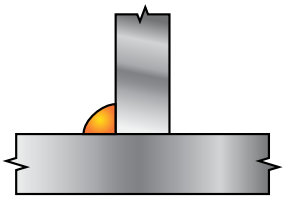

BASE METALS

Material Spec. **A-36** to **A-36**

Type or Grade to

Thickness: Groove (in) **N/A** - **N/A**

Fillet ( )**Unlimited** -

Diameter (Pipe, in) **N/A** - **N/A**

FILLER METALS

AWS Specification **A5.1**

AWS Classification **E-6010**

SHIELDING

Flux **N/A**

Electrode-Flux (Class) **N/A**

Gas **N/A**

Composition **N/A**

Flow Rate **N/A**

Gas Cup Size **N/A**

PREHEAT

Preheat Temp., Min. **60 Deg.F**

Thickness Up to 3/4" Temperature **N/A**

Over 3/4" to 1-1/2" **N/A**

Over 1-1/2" to 2-1/2" **N/A**

Over 2-1/2" **N/A**

Interpass Temp., Min. **N/A** Max. **N/A**

POSITION

Position of Groove Fillet **1F,2F,3F,4F**

Vertical Progression: ☒ Up ☐ Down

ELECTRICAL CHARACTERISTICS

Transfer Mode (GMAW):

Short-Circuiting ☐ Globular ☐ Spray ☐

Current: AC ☐ DCEP ☒ DCEN ☐ Pulsed ☐

Other **N/A**

Tungsten Electrode (GTAW):

Size **N/A** Type **N/A**

TECHNIQUE

Stringer or Weave Bead **Both**

Multi-pass or Single Pass (per side) **Multiple/Single**

Number of Electrodes **1**

Electrode Spacing: Longitudinal **N/A**

Lateral **N/A**

Angle **N/A**

Contact Tube to Work Distance **N/A**

Peening **N/A**

Interpass Cleaning **Chip slag and wire brush**

POSTWELD HEAT TREATMENT

PWHT Required ☐

Temp. **N/A** Time **N/A**

WELDING PROCEDURE

Layer/Pass	Process	Filler Metal Class	Diameter	Cur. Type	Amps	Volts	Travel Speed	Other Notes
All	SMAW	E-6010	1/8	DCEP	90-115	N/A	4-10 ipm	

SkillsUSA

Welding Procedure Specification

WPS 107

WPS No. **WPS 107** Revision **2** Date **4/20/2012** By **NP**

Authorized By **GH** Date **5/15/2011** Prequalified ☒

Welding Process(es) **SMAW** Type: Manual ☒ Machine ☐ Semi-Auto ☐ Auto ☐

Supporting PQR(s) **Prequalified**

JOINT

Type **T-Joint**

Backing Yes ☐ No ☒ Single Weld ☒ Double Weld ☐

Backing Material **N/A**

Root Opening **N/A** Root Face Dimension **N/A**

Groove Angle **N/A** Radius (J-U) **N/A**

Back Gouge Yes ☐ No ☒

Method **N/A**

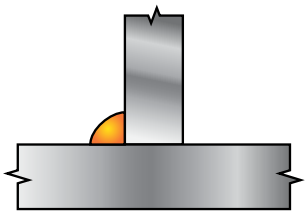

BASE METALS

Material Spec. **A-36** to **A-36**

Type or Grade to

Thickness: Groove (in) **N/A** - **N/A**

Fillet ( )**Unlimited** -

Diameter (Pipe, in) **N/A** - **N/A**

FILLER METALS

AWS Specification **A5.1**

AWS Classification **E-7024**

SHIELDING

Flux **N/A**

Electrode-Flux (Class) **N/A**

Gas **N/A**

Composition **N/A**

Flow Rate **N/A**

Gas Cup Size **N/A**

PREHEAT

Preheat Temp., Min. **60 Deg.F**

Thickness Up to 3/4" Temperature **N/A**

Over 3/4" to 1-1/2" **N/A**

Over 1-1/2" to 2-1/2" **N/A**

Over 2-1/2" **N/A**

Interpass Temp., Min. **N/A** Max. **N/A**

POSITION

Position of Groove Fillet **1F,2F**

Vertical Progression: ☐ Up ☐ Down

ELECTRICAL CHARACTERISTICS

Transfer Mode (GMAW):

Short-Circuiting ☐ Globular ☐ Spray ☐

Current: AC ☐ DCEP ☒ DCEN ☐ Pulsed ☐

Other **N/A**

Tungsten Electrode (GTAW):

Size **N/A** Type **N/A**

TECHNIQUE

Stringer or Weave Bead **Both**

Multi-pass or Single Pass (per side) **Multiple/Single**

Number of Electrodes **1**

Electrode Spacing: Longitudinal **N/A**

Lateral **N/A**

Angle **N/A**

Contact Tube to Work Distance **N/A**

Peening **N/A**

Interpass Cleaning **Chip slag and wire brush**

POSTWELD HEAT TREATMENT

PWHT Required ☐

Temp. **N/A** Time **N/A**

WELDING PROCEDURE

Layer/Pass	Process	Filler Metal Class	Diameter	Cur. Type	Amps	Volts	Travel Speed	Other Notes
All	SMAW	E-7024	1/8	DCEP	130-150	N/A	4-10 ipm	

SkillsUSA

Welding Procedure Specification

WPS 108

WPS No. **WPS 108** Revision **1** Date **5/04/2014** By **NP**

Authorized By **EN** Date **5/04/2014** Prequalified ☒

Welding Process(es) **FCAW-G** Type: Manual ☐ Machine ☐ Semi-Auto ☒ Auto ☐

Supporting PQR(s) **Prequalified**

JOINT

Type **T-Joint, Butt, Flanged**

Backing Yes ☐ No ☒ Single Weld ☒ Double Weld ☒

Backing Material **N/A**

Root Opening **0** Root Face Dimension **N/A**

Groove Angle **N/A** Radius (J-U) **N/A**

Back Gouge Yes ☐ No ☒

Method **N/A**

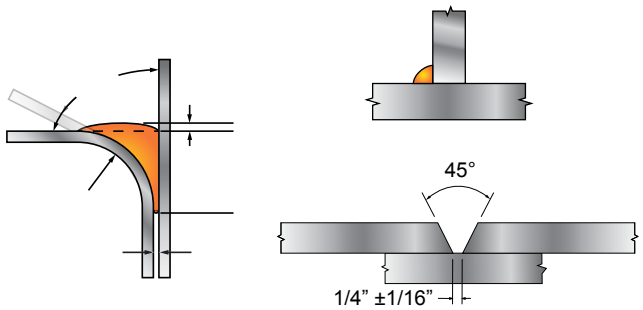

BASE METALS

Material Spec. **A-36** to **A-36**

Type or Grade to

Thickness: Groove ( )**Unlimited** - **N/A**

Fillet (in)**Unlimited** -

Diameter (Pipe,) **N/A** - **N/A**

FILLER METALS

AWS Specification **A5.20**

AWS Classification **E71T-1**

SHIELDING

Flux **N/A**

Electrode-Flux (Class) **N/A**

Gas **M20-ArC-10**

Composition **90%Argon/10%CO2**

Flow Rate **35-45 CFH**

Gas Cup Size **1/2" - 3/4"**

PREHEAT

Preheat Temp., Min. **60 Deg.F**

Thickness Up to 3/4" Temperature **N/A**

Over 3/4" to 1-1/2" **N/A**

Over 1-1/2" to 2-1/2" **N/A**

Over 2-1/2" **N/A**

Interpass Temp., Min. **N/A** Max. **N/A**

POSITION

Position of Groove **All** Fillet **All**

Vertical Progression: ☒ Up ☐ Down

ELECTRICAL CHARACTERISTICS

Transfer Mode (GMAW):

Short-Circuiting ☐ Globular ☐ Spray ☐

Current: AC ☐ DCEP ☒ DCEN ☐ Pulsed ☐

Other **N/A**

Tungsten Electrode (GTAW):

Size **N/A** Type **N/A**

TECHNIQUE

Stringer or Weave Bead **Both**

Multi-pass or Single Pass (per side) **Multiple/Single**

Number of Electrodes **1**

Electrode Spacing: Longitudinal **N/A**

Lateral **N/A**

Angle **N/A**

Contact Tube to Work Distance **1/2" to 3/4"**

Peening **N/A**

Interpass Cleaning **Chip slag and wire brush**

POSTWELD HEAT TREATMENT

PWHT Required ☐

Temp. **N/A** Time **N/A**

WELDING PROCEDURE

Layer/Pass	Process	Filler Metal Class	Diameter	Cur. Type	Amps	Volts	Travel Speed	Other Notes
All	FCAW-G	E71T-1M	0.045	DCEP	200-275	23-26	5-12	WFS:285-362 ipm
RECOMMENDED SETTINGS:								
1F&2F	FCAW-G	E71T-1M	0. 045	DCEP	250	25	5-12	WFS:362ipm
4F	FCAW-G	E71T-1M	0.045	DCEP	225	24	5-12	WFS:327ipm
3F	FCAW-G	E71T-1M	0.045	DCEP	200	23	5-12	WFS:285ipm

SkillsUSA

Welding Procedure Specification

WPS 110

WPS No. **WPS 110** Revision **1** Date **06/04/2015** By **NP**

Authorized By **EN** Date **6/04/2015** Prequalified ☒

Welding Process(es) **GMAW** Type: Manual ☐ Machine ☐ Semi-Auto ☒ Auto ☐

Supporting PQR(s)

JOINT

Type **T-Joint**

Backing Yes ☐ No ☒ Single Weld ☒ Double Weld ☒

Backing Material **N/A**

Root Opening **N/A** Root Face Dimension **N/A**

Groove Angle **N/A** Radius (J-U) **N/A**

Back Gouge Yes ☐ No ☒

Method **N/A**

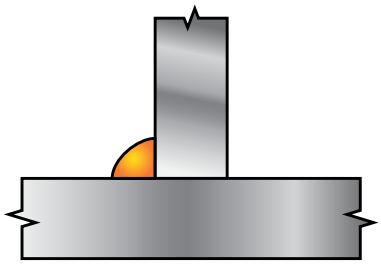

BASE METALS

Material Spec. **A 36** to **A 36**

Type or Grade to

Thickness: Groove ( ) **N/A** - **N/A**

Fillet (in) **Unlimited** -

Diameter (Pipe,) **N/A** - **N/A**

FILLER METALS

AWS Specification **A5.18**

AWS Classification **ER70S-6**

SHIELDING

Flux **N/A**

Electrode-Flux (Class) **N/A**

Gas **M20-ArC-10**

Composition **90%Argon/10%CO2**

Flow Rate **35-45 CFH**

Gas Cup Size **1/2" - 3/4"**

PREHEAT

Preheat Temp., Min. **60 Deg.F**

Thickness Up to 3/4" Temperature **N/A**

Over 3/4" to 1-1/2" **N/A**

Over 1-1/2" to 2-1/2" **N/A**

Over 2-1/2" **N/A**

Interpass Temp., Min. **N/A** Max. **N/A**

POSITION

Position of Groove **N/A** Fillet **1F, 2F**

Vertical Progression: ☐ Up ☐ Down

ELECTRICAL CHARACTERISTICS

Transfer Mode (GMAW):

Short-Circuiting ☐ Globular ☐ Spray ☒

Current: AC ☐ DCEP ☒ DCEN ☐ Pulsed ☐

Other **N/A**

Tungsten Electrode (GTAW):

Size **N/A** Type **N/A**

TECHNIQUE

Stringer or Weave Bead **Stringer**

Multi-pass or Single Pass (per side) **Multiple/Single**

Number of Electrodes **1**

Electrode Spacing: Longitudinal **N/A**

Lateral **N/A**

Angle **N/A**

Contact Tube to Work Distance **5/8" to 3/4"**

Peening **N/A**

Interpass Cleaning **Chip slag and wire brush**

POSTWELD HEAT TREATMENT

PWHT Required ☐

Temp. **N/A** Time **N/A**

WELDING PROCEDURE

Layer/Pass	Process	Filler Metal Class	Diameter	Cur. Type	Amps	Volts	Travel Speed	Other Notes
All	GMAW	ER70S-6	0.035	DCEP	165-235	23.5-25.5	5-12	WFS:330-465 ipm